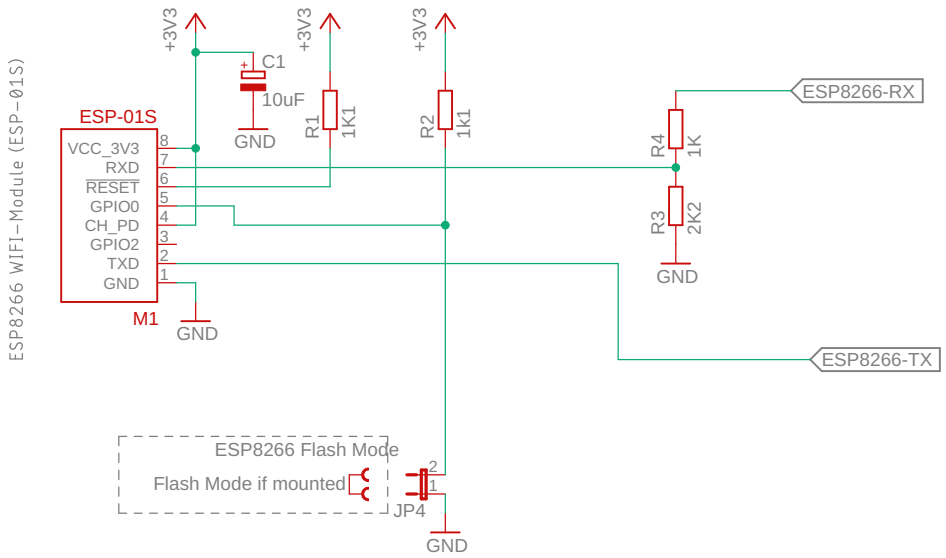

VIA University College
Ib Havn

2017-003 1.0.1

ESP8266-WIFI
VIA Shield
06/02/2020 15:14
Sheet: 5/9