DG seq - SL Nodo
TC I2

3000 MPTD AMMONIA

FAT MASTER COPY.

DCS LOGIC DIAGRAMS-AMMONIA UTILITIES

Confidentiality Label:
This document contains KBR confidential information and cannot be copied to or used by any party for any purpose without KBR (through Tecnimont Spa) prior written consent. However, LLC Eurochem Northwest-2 may modify copy and use the same for the financing, design of the Project.

Export Compliance:
This document / software contains technical information that is subject to U.S. and any other applicable export control regulation, including restrictions on the export, sale or transfer of U.S.-origin items (goods, technology or software) to sanctioned or embargoed countries, entities or persons. It may not be exported or re-exported except as authorized

Issue	Description	Date	Prepared	Checked	Approved
03	Final Issue	01.11.2021	S. Dahake	K.chavan	C. Piffari
02	Final Issue	27.08.2021	S. Dahake	K.chavan	C. Piffari
01	Issue for Review	23.03.2021	S. Dahake	K.chavan	C. Piffari

This copy of this document is LLC Eurochem Northwest-2's property and its copyright is vested in Tecnimont Spa. This document contains confidential information and cannot be copied to or used by any party for any purpose without Tecnimont's Spa and LLC Eurochem Northwest-2's prior written consent. Additional restriction are as stated in the above confidentiality label, if any.

EUROCHEM	DCS-INDEX_SH_A INDEX SHEET DCS LOGIC DIAGRAMS-AMMONIA UTILITIES AMMONIA AND UREA PRODUCTION, KINGISEPP	TECNIMONT IDENTIFICATION CODE Document Number 4124-JK-DD-217000010 Revision 03 Sheet 2 next 3 Sh.Rev. 03
Tecnimont	3000 MTPD AMMONIA	CUSTOMER IDENTIFICATION CODE - 03

DCS SOFTWARE

INTERLOCK NO.	SHEET NAME	DESCRIPTION	SHEET NO.	REV
COVERPAGE	COVERPAGE	COVERPAGE	1	03
DCS-INDEX	DCS-INDEX_SH_A	INDEX SHEET	2	03
DCS-INDEX	DCS-INDEX_SH_B	INDEX SHEET	3	03
DCS-INDEX	DCS-INDEX_SH_C	INDEX SHEET	4	03
DCS-INDEX	DCS-INDEX_SH_D	INDEX SHEET	5	03
DCS-NOTES	DCS-NOTES	GENERAL NOTES	10	03
DCS-LEGEND	DCS-LEGEND-1	LEGEND SHEET FOR SIGNALS	50	01
DCS-LEGEND	DCS-LEGEND-2	LEGEND FOR CONTROL SYMBOL 1	51	01
DCS-LEGEND	DCS-LEGEND-3	LEGEND FOR CONTROL SYMBOL 2	52	01
DCS-LEGEND	DCS-LEGEND-4	LEGEND FOR CONTROL SYMBOL 3	53	01
DCS-LEGEND	DCS-LEGEND-5	LEGEND FOR CONTROL SYMBOL 4	54	01
DCS-LEGEND	DCS-LEGEND-6	LEGEND SHEET FOR DEVICE CONTROLLER 1	55	02
DCS-LEGEND	DCS-LEGEND-7	LEGEND SHEET FOR DEVICE CONTROLLER 2	56	01
DCS-LEGEND	DCS-LEGEND-8	TYPICAL FOR DUTY/STANDBY LOGIC (01 OF 04)	57	02
DCS-LEGEND	DCS-LEGEND-9	TYPICAL FOR DUTY/STANDBY LOGIC (02 OF 04)	58	01
DCS-LEGEND	DCS-LEGEND-10	TYPICAL FOR DUTY/STANDBY LOGIC (03 OF 04)	59	01
DCS-LEGEND	DCS-LEGEND-11	TYPICAL FOR DUTY/STANDBY LOGIC (04 OF 04)	60	01
DCS-LEGEND	DCS-LEGEND-12	TYPICAL FOR LAMP TEST	61	01
DCS-LEGEND	DCS-LEGEND-13	BAD PV & DEVIATION / GENERAL ALARM	62	01
DCS-LEGEND	DCS-LEGEND-14	MOTOR FWD/REV	63	03
17-ID-0101	17-ID-0101	BLOWDOWN AND INDUSTRIAL WATER SHUT-OFF	100	02
17-ID-0201	17-ID-0201	OSPC PUMP START / STOP	110	01
17-ID-0301	17-ID-0301_shA	DEMI WATER PUMPS	130	02
17-ID-0301	17-ID-0301_shB	DEMI WATER PUMPS	132	02
17-ID-0301	17-ID-0301_shC	DEMI WATER PUMPS	134	01

INTERLOCK NO.	SHEET NAME	DESCRIPTION	SHEET NO.	REV
17-ID-0301	17-ID-0301_shD	DEMI WATER PUMPS	136	02
17-ID-0302	17-ID-0302_shA	MIXED BED FEED PUMPS START / STOP	140	01
17-ID-0302	17-ID-0302_shB	MIXED BED FEED PUMPS START / STOP	142	02
17-ID-0302	17-ID-0302_shC	MIXED BED FEED PUMPS START / STOP	144	01
17-ID-0303	17-ID-0303_shA	LP CONDENSATE PUMPS START / STOP	150	02
17-ID-0303	17-ID-0303_shB	LP CONDENSATE PUMPS START / STOP	152	02
17-ID-0304	17-ID-0304_shA	SAC FILTER FEED PUMPS START / STOP	160	01
17-ID-0304	17-ID-0304_shB	SAC FILTER FEED PUMPS START / STOP	162	01
17-ID-0304	17-ID-0304_shC	SAC FILTER FEED PUMPS START / STOP	164	01
17-ID-0305	17-ID-0305	SCT FROM NH3 PLANT TO SAC FILTERS	170	01
17-ID-0306	17-ID-0306	SCT FROM CO2 COMPRESSOR TO SAC FILTERS	180	01
17-ID-0307	17-ID-0307	STEAM COND FROM UREA MELT PLANT TO SAC FLTR	190	01
17-ID-0702	17-ID-0702_shA1	COOLING WATER CIRCULATION PUMPS	200	01
17-ID-0702	17-ID-0702_shA2	COOLING WATER CIRCULATION PUMPS	202	01
17-ID-0702	17-ID-0702_shB1	COOLING WATER CIRCULATION PUMPS	204	01
17-ID-0702	17-ID-0702_shB2	COOLING WATER CIRCULATION PUMPS	206	01
17-ID-0702	17-ID-0702_shC1	COOLING WATER CIRCULATION PUMPS	208	01
17-ID-0702	17-ID-0702_shC2	COOLING WATER CIRCULATION PUMPS	210	01
17-ID-0702	17-ID-0702_shD1	COOLING WATER CIRCULATION PUMPS	212	01
17-ID-0702	17-ID-0702_shD2	COOLING WATER CIRCULATION PUMPS	214	01
17-ID-0702	17-ID-0702_shE1	COOLING WATER CIRCULATION PUMPS	216	01
17-ID-0702	17-ID-0702_shE2	COOLING WATER CIRCULATION PUMPS	218	01
17-ID-0702	17-ID-0702_shF1	COOLING WATER CIRCULATION PUMPS	220	01
17-ID-0702	17-ID-0702_shF2	COOLING WATER CIRCULATION PUMPS	222	01
17-ID-0702	17-ID-0702_shG1	COOLING WATER CIRCULATION PUMPS	224	01

} 18.2.

9/2/22

9/2/22

EUROCHEM

Tecnimont

DCS-INDEX_SH_B INDEX SHEET

DCS LOGIC DIAGRAMS-AMMONIA UTILITIES

AMMONIA AND UREA PRODUCTION, KINGISEPP

3000 MTPD AMMONIA

TECNIMONT IDENTIFICATION CODE	
Document Number	Revision
4124-JK-DD-217000010	03
Sheet 3 next 4	
Sh.Rev. 03	
CUSTOMER IDENTIFICATION CODE	
-	03

INPUT

DCS SOFTWARE

INTERLOCK NO.	SHEET NAME	DESCRIPTION	SHEET NO.	REV	
17-ID-0702	17-ID-0702_shG2	COOLING WATER CIRCULATION PUMPS	226	01	9/2/22
17-ID-0702	17-ID-0702_shH	COOLING WATER CIRCULATION PUMPS	228	03	
17-ID-0713	17-ID-0713	31.01.22 COOLING WATER CIRCULATION PUMP (17-P-071A)	240	01	7/2/22
17-ID-0714	17-ID-0714	31.01.22 COOLING WATER CIRCULATION PUMP (17-P-071B)	245	02	7/2/22
17-ID-0715	17-ID-0715	31.01.22 COOLING WATER CIRCULATION PUMP (17-P-071C)	250	02	7/2/22
17-ID-0716	17-ID-0716	31.01.22 COOLING WATER CIRCULATION PUMP (17-P-071D)	255	02	7/2/22
17-ID-0717	17-ID-0717	31.01.22 COOLING WATER CIRCULATION PUMP (17-P-071E)	260	02	7/2/22
17-ID-0718	17-ID-0718	31.01.22 COOLING WATER CIRCULATION PUMP (17-P-071F)	265	02	7/2/22
17-ID-0719	17-ID-0719	31.01.22 COOLING WATER CIRCULATION PUMP (17-P-071G)	270	02	7/2/22
17-ID-0780A	17-ID-0780A	STOP HEATER CT FAN 17-L-071-KM-071A	271	03	
17-ID-0780B	17-ID-0780B	STOP HEATER CT FAN 17-L-071-KM-071B	272	3	
17-ID-0780C	17-ID-0780C	STOP HEATER CT FAN 17-L-071-KM-071C	273	03	11/2/22
17-ID-0780D	17-ID-0780D	STOP HEATER CT FAN 17-L-071-KM-071D	274	03	
17-ID-0780E	17-ID-0780E	STOP HEATER CT FAN 17-L-071-KM-071E	275	03	
17-ID-0780F	17-ID-0780F	STOP HEATER CT FAN 17-L-071-KM-071F	276	03	
17-ID-0780G	17-ID-0780G	STOP HEATER CT FAN 17-L-071-KM-071G	277	03	
17-ID-0780H	17-ID-0780H	STOP HEATER CT FAN 17-L-071-KM-071H	278	03	
17-ID-0703	17-ID-0703_shA	EMERGENCY COOLING WATER PUMPS	280	02	7/2/22
17-ID-0703	17-ID-0703_shB	EMERGENCY COOLING WATER PUMPS	282	02	7/2/22
17-ID-0703	17-ID-0703_shC	EMERGENCY COOLING WATER PUMPS	284	03	7/2/22
17-ID-0720	17-ID-0720	EMERGENCY COOLING WATER PUMP (17-P-073A)	290	02	7/2/22
17-ID-0721	17-ID-0721	EMERGENCY COOLING WATER PUMP (17-P-073B)	300	02	7/2/22
17-ID-0704A	17-ID-0704A_shA	01.02.22 WASTE WATER PUMPS (17-P-072A)	310	01	7/2/22
17-ID-0704B	17-ID-0704B_shA	01.02.22 WASTE WATER PUMPS (17-P-072B)	312	01	7/2/22
17-ID-0704B	17-ID-0704B_shB	01.02.22 WASTE WATER PUMPS (17-P-072B)	314	01	7/2/22

OUTPUT

INTERLOCK NO.	SHEET NAME	DESCRIPTION	SHEET NO.	REV	
17-ID-0705	17-ID-0705_shA	02.02.22 SIDE STREAM FILTER PACKAGE	315	03	7/2/22
17-ID-0705	17-ID-0705_shB	02.02.22 SIDE STREAM FILTER PACKAGE	318	03	7/2/22
17-ID-0706	17-ID-0706	02.02.22 SIDE STREAM FILTER PACKAGES UNIT 17-L-072A/B	320	03	8/2/22
17-ID-0722	17-ID-0722	START PERM FOR CT FAN 17-M-071LK-A	321	02	
17-ID-0723	17-ID-0723	START PERM FOR CT FAN 17-M-071LK-B	322	03	
17-ID-0724	17-ID-0724	START PERM FOR CT FAN 17-M-071LK-C	323	03	
17-ID-0725	17-ID-0725	START PERM FOR CT FAN 17-M-071LK-D	324	03	11/2/2
17-ID-0726	17-ID-0726	START PERM FOR CT FAN 17-M-071LK-E	325	03	
17-ID-0727	17-ID-0727	START PERM FOR CT FAN 17-M-071LK-F	326	03	
17-ID-0728	17-ID-0728	START PERM FOR CT FAN 17-M-071LK-G	327	03	
17-ID-0729	17-ID-0729	START PERM FOR CT FAN 17-M-071LK-H	328	03	
17-ID-0730	17-ID-0730_shA	INJECTION SYSTEM PH CONTROL	330	02	4/2/22
17-ID-0730	17-ID-0730_shB	INJECTION SYSTEM PH CONTROL	332	02	
17-ID-0731	17-ID-0731_shA	INJECTION SYSTEM CORROSION INHIBITOR	340	02	4/2/22
17-ID-0731	17-ID-0731_shB	INJECTION SYSTEM CORROSION INHIBITOR	342	02	
17-ID-0732	17-ID-0732_shA	INJECTION SYSTEM DISPERSANT	350	02	4/2/22
17-ID-0732	17-ID-0732_shB	INJECTION SYSTEM DISPERSANT	352	02	
17-ID-0733	17-ID-0733_shA	INJECTION SYSTEM NON OXIDANT BIOCIDE 1	360	02	4/2/22
17-ID-0733	17-ID-0733_shB	INJECTION SYSTEM NON OXIDANT BIOCIDE 1	362	02	
17-ID-0734	17-ID-0734_shA	INJECTION SYSTEM CHLORINE ENHANCER	370	02	4/2/22
17-ID-0734	17-ID-0734_shB	INJECTION SYSTEM CHLORINE ENHANCER	372	02	
17-ID-0735	17-ID-0735_shA	INJ SYS OXIDANT BIOCIDE 2 – SODIUM HYPOCHLORITE	380	02	4/2/22
17-ID-0735	17-ID-0735_shB	INJ SYS OXIDANT BIOCIDE 2 – SODIUM HYPOCHLORITE	382	02	
17-ID-0911	17-ID-0911	INSTRUMENT AIR BUFFER VESSELS	390	02	
17-ID-1001	17-ID-1001	M2 TO HHP N2 COMP & KINGISEPP 1 BATTERY LIMIT	400	01	

EuroChem

Tecnimont

DCS-INDEX_SH_C INDEX SHEET

DCS LOGIC DIAGRAMS-AMMONIA UTILITIES

AMMONIA AND UREA PRODUCTION, KINGISEPP

3000 MTPD AMMONIA

TECNIMONT IDENTIFICATION CODE	
Document Number	Revision
4124-JK-DD-217000010	03
Sheet 4 next 5	
Sh.Rev. 03	
CUSTOMER IDENTIFICATION CODE	
-	03

INPUT — DCS SOFTWARE — OUTPUT

INTERLOCK NO.	SHEET NAME	DESCRIPTION	SHEET NO.	REV
17-ID-1101	17-ID-1101	PHOSPHATE INJECTION SYSTEM (17-L-112)	410	02
17-ID-1102	17-ID-1102	OXUGEN SCAVENGER INJECTION SYSTEM 17-L-113	420	02
17-ID-1103	17-ID-1103	AMINE INJECTION SYSTEM 17-L-114	430	02
17-ID-1104	17-ID-1104	BOILER FEED WATER PUMPS START/AUTOSTART	440	03
17-ID-1301	17-ID-1301_shA	SAFETY SHOWER PUMP START	450	02
17-ID-1301	17-ID-1301_shB	SAFETY SHOWER PUMP START	452	02
17-ID-1301	17-ID-1301_shC	SAFETY SHOWER PUMP START	454	01
17-ID-1301	17-ID-1301_shD	SAFETY SHOWER PUMP START	456	02
17-ID-1401A	17-ID-1401A	RAIN WATER PUMPS FOR 17-BS-143A/B	460	02
17-ID-1401B	17-ID-1401B_shA	RAIN WATER PUMPS FOR 17-BS-143A/B	462	02
17-ID-1401B	17-ID-1401B_shB	RAIN WATER PUMPS FOR 17-BS-143A/B	464	01
17-ID-1402A	17-ID-1402A	RAIN WATER RETENTION BASIN PUMPS FOR 17-BS-144	470	02
17-ID-1402B	17-ID-1402B_shA	RAIN WATER RETENTION BASIN PUMPS FOR 17-BS-144	472	02
17-ID-1402B	17-ID-1402B_shB	RAIN WATER RETENTION BASIN PUMPS FOR 17-BS-144	474	01
17-ID-1403A	17-ID-1403A	CLEAN RAIN WATER OVERFLOW PUMPS	480	02
17-ID-1403B	17-ID-1403B_shA	CLEAN RAIN WATER OVERFLOW PUMPS	482	02
17-ID-1403B	17-ID-1403B_shB	CLEAN RAIN WATER OVERFLOW PUMPS	484	01
17-ID-1701	17-ID-1701_shA	GLYCOL WATER CIRCULATING PUMPS START / AUTOSTART	490	02
17-ID-1701	17-ID-1701_shB	GLYCOL WATER CIRCULATING PUMPS START / AUTOSTART	492	02
17-ID-1701	17-ID-1701_shC	GLYCOL WATER CIRCULATING PUMPS START / AUTOSTART	494	01
17-ID-1702	17-ID-1702	GLYCOL WATER FILLING PUMPS START	500	02
17-ID-1703	17-ID-1703	GLYCOL WATER OVERFLOW ON-OFF VALVE	510	02
17-ID-1404	17-ID-1404A	CONTAMINATED WATER PUMP FOR 17-BS-143AB	520	02
17-ID-1404	17-ID-1404B	CONTAMINATED WATER PUMP FOR 17-BS-143AB	530	02
17-ID-1405A	17-ID-1405A	K2 CLEANRAIN WATER LIFT STN1 17L140P140A	540	02

INTERLOCK NO.	SHEET NAME	DESCRIPTION	SHEET NO.	REV
17-ID-1405B	17-ID-1405B_shA	K2 CLEAN RAIN WATER LIFT STN1 17L140P140B	542	01
17-ID-1405B	17-ID-1405B_shB	K2 CLEAN RAIN WATER LIFT STN1 17L140P140B	544	01
17-ID-1406A	17-ID-1406A	K2 CLEAN RAIN WATER LIFT STN2 17L143P143A	550	02
17-ID-1406B	17-ID-1406B_shA	K2 CLEAN RAIN WATER LIFT STN2 17L143P143B	552	01
17-ID-1406B	17-ID-1406B_shB	K2 CLEAN RAIN WATER LIFT STN2 17L143P143B	554	01
17-ID-1407A	17-ID-1407A	K13 PROC CONTAMINATED WTR LIFT STN 17L146P146A	560	02
17-ID-1407B	17-ID-1407B_shA	K13 PROC CONTAMINATED WTR LIFT STN 17L146P146B	562	01
17-ID-1407B	17-ID-1407B_shB	K13 PROC CONTAMINATED WTR LIFT STN 17L146P146B	564	01
17-ID-1408A	17-ID-1408A	K17 OILY CONTAMINATED WTR LIFT STN 17L147P147A	570	02
17-ID-1408B	17-ID-1408B_shA	K17 OILY CONTAMINATED WTR LIFT STN 17L147P147B	572	01
17-ID-1408B	17-ID-1408B_shB	K17 OILY CONTAMINATED WTR LIFT STN 17L147P147B	574	01
Appendix-1	Appendix-1_shA	ON-OFF VALVES	680	02
Appendix-1	Appendix-1_shB	ON-OFF VALVES	681	02
Appendix-2	Appendix-2_shA	MOTORS	700	03
Appendix-3	Appendix-3	Appendix-3	702	03
Appendix-4	Appendix-4	Appendix-4 (WPU)	704	02
Appendix-5	Appendix-5_shA	Appendix-5 DG SEQUENCE PARAM	706	02
Appendix-5	Appendix-5_shB	Appendix-5 DG SEQUENCE PARAM	708	02
Appendix-5	Appendix-5_shC	Appendix-5 DG SEQUENCE PARAM	710	02
Appendix-5	Appendix-5_shD	Appendix-5 DG SEQUENCE PARAM	712	02
Appendix-6	Appendix-6_shA	17-P-111A TURBINE SEQUENCE	720	03
Appendix-6	Appendix-6_shB	17-P-111A TURBINE SEQUENCE	722	03
Appendix-6	Appendix-6_shC	17-P-111A TURBINE SEQUENCE	724	03
Appendix-7	Appendix-7_shA	APPENDIX-7 MOTORS	730	02
Appendix-7	Appendix-7_shB	APPENDIX-7 MOTORS	732	03

11/2/22

14/2/22

11/2/22

11/2/2

8/2/2

8/2/22

8/2/2

8/2/2

8/2/2

8/2/2

EUROCHEM

Tecnimont

DCS-INDEX_SH_D DCS INDEX

DCS LOGIC DIAGRAMS-AMMONIA UTILITIES

AMMONIA AND UREA PRODUCTION, KINGISEPP

3000 MTPD AMMONIA

TECNIMONT IDENTIFICATION CODE	
Document Number	Revision
4124-JK-DD-217000010	03
Sheet 5 next 10	
Sh.Rev. 03	
CUSTOMER IDENTIFICATION CODE	
-	03

INPUT

DCS SOFTWARE

OUTPUT

1/2/22

INTERLOCK NO.	SHEET NAME	DESCRIPTION	SHEET NO.	REV
17-1D-0770A ~~Appendix-8~~	~~Appendix-8_shA~~	~~APPENDIX-8~~ CT FAN 17-P-071LK-A	750	03
17-1D-0770B ~~Appendix-8~~	~~Appendix-8_shB~~	~~APPENDIX-8~~ CT FAN 17-P-071LK-B	751	03
17-1D-0770C ~~Appendix-8~~	~~Appendix-8_shC~~	~~APPENDIX-8~~ CT FAN 17-P-071LK-C	752	03
17-1D-0770D ~~Appendix-8~~	~~Appendix-8_shD~~	~~APPENDIX-8~~ CT FAN 17-P-071LK-D	753	03
17-1D-0770E ~~Appendix-8~~	~~Appendix-8_shE~~	~~APPENDIX-8~~ CT FAN 17-P-071LK-E	754	03
17-1D-0770F ~~Appendix-8~~	~~Appendix-8_shF~~	~~APPENDIX-8~~ CT FAN 17-P-071LK-F	755	03
17-1D-0770G ~~Appendix-8~~	~~Appendix-8_shG~~	~~APPENDIX-8~~ CT FAN 17-P-071LK-G	756	03
17-1D-0770H ~~Appendix-8~~	~~Appendix-8_shH~~	~~APPENDIX-8~~ CT FAN 17-P-071LK-H	757	03
Appendix-8A		Nitrogen unit Exchage signal	770	03A.
Appendix-8B		Boiler.	780	03A

INTERLOCK NO.	SHEET NAME	DESCRIPTION	SHEET NO.	REV

EuroChem

Tecnimont

DCS-NOTES GENERAL NOTES

DCS LOGIC DIAGRAMS-AMMONIA UTILITIES

AMMONIA AND UREA PRODUCTION, KINGISEPP

3000 MTPD AMMONIA

TECNIMONT IDENTIFICATION CODE	
Document Number	Revision
4124-JK-DD-217000010	03
Sheet 10	next 50
Sh.Rev. 03	
CUSTOMER IDENTIFICATION CODE	
	03

INPUT

Logic Status	TAG
0= 1=	
0= 1=	
0= 1=	
0= 1=	
0= 1=	
0= 1=	
0= 1=	
0= 1=	
0= 1=	
0= 1=	
0= 1=	
0= 1=	
0= 1=	
0= 1=	

DCS SOFTWARE

1.Reference Documents:

Sr. No	Doc. Number	Document Description	Revision
1	4124-WZ-SG-217000005	PROCESS INTERLOCK DESCRIPTION	04
2		AMMONIA PLANT P&IDs	04
3	4124-WZ-LP-217007005	ALARM, TRIP & SET POINT LIST	02

03

OUTPUT

TAG	Logic Status
	0= 1=
	0= 1=
	0= 1=
	0= 1=
	0= 1=
	0= 1=
	0= 1=
	0= 1=
	0= 1=
	0= 1=
	0= 1=
	0= 1=
	0= 1=
	0= 1=

EUROCHEM

Tecnimont

DCS-LEGEND-1 LEGEND SHEET FOR SIGNALS

DCS LOGIC DIAGRAMS-AMMONIA UTILITIES

AMMONIA AND UREA PRODUCTION, KINGISEPP

3000 MTPD AMMONIA

TECNIMONT IDENTIFICATION CODE	
Document Number	Revision
4124-JK-DD-217000010	03
Sheet 50	next 51
Sh.Rev. 01	
CUSTOMER IDENTIFICATION CODE	
-	03

INPUT

Logic Status	TAG
0= 1=	
0= 1=	
0= 1=	
0= 1=	
0= Status 0 1= Status 1	XXXXXX LOC LINK TYPE
0= 1=	
0= 1=	
0= 1=	
0= 1=	
0= 1=	
0= 1=	
0= 1=	
0= 1=	

DCS SOFTWARE

Interlock number

Interlock Description

Logic Status correspondance with the physical event (Discrete Input/Output Only)

Tag Name

Signal Type

Instrument Location

Link

OUTPUT

TAG	Logic Status
	0= 1=
	0= 1=
	0= 1=
	0= 1=
XXXXXX LOC LINK TYPE	0= Status 0 1= Status 1
	0= 1=
	0= 1=
	0= 1=
	0= 1=
	0= 1=
	0= 1=
	0= 1=
	0= 1=

(*) Signal Type

AI	=	Analog Input
AO	=	Analog Output
DI	=	Digital Input
DO	=	Digital Output
AI-R	=	Analog Input Redundant
AO-R	=	Analog Output Redundant
DI-R	=	Digital Input Redundant
DO-R	=	Digital Output Redundant
SAI	=	Serial Analog Input
SAO	=	Serial Analog Output
SDI	=	Serial Digital Input
SDO	=	Serial Digital Output

(**) Link

–	=	No link type required
AS	=	Analyzer Shelter
CEMS	=	Continuous Emissioning Monitoring System
FAP	=	Fire Alarm Panel
HMI	=	Human-Machine Interface
ESD	=	Emergency Shutdown System
MMS	=	Machine Monitoring System
BMS	=	Burner Management System
PLC	=	Programmable Logic Controller
ITCC	=	Integrated Turbine Compressor Control
IMCC	=	Integrated Motor Compressor Control
ECS	=	Electrical Control & Monitoring System
OST	=	Over-Speed Trip System
GOV	=	Governor System
TGS	=	Tank Gauging System

(***) Instrument Location

AS	=	Analyzer Shelter
DCS	=	Distributed Control System
ESD	=	Emergency Shutdown System
Field	=	Component located in Plant area
LP	=	Local Panel
MCC	=	Motor Control Centre
SS-AM	=	Sub Station- Ammonia
SS-UR	=	Sub Station- Urea
SDC-AM	=	Shutdown Console- Ammonia
SDC-UR	=	Shutdown Console- Urea
MMS	=	Machine Monitoring System
BMS	=	Burner Management System
PLC	=	Programmable Logic Controller
CR-AM	=	Control Room-Ammonia
RR-AM	=	Rack Room-Ammonia
CR-UR	=	Control Room-Urea
RR-UR	=	Rack Room-Urea
CR-UPH	=	Control Room- Urea Product Handling
RR-UPH	=	Rack Room- Urea Product Handling
SS-UPH		Satellite Substation- Urea Product Handling
CR-WPU	=	Control Room- Water Preparation Unit
RR-WPU	=	Rack Room- Water Preparation Unit
SS-WPU	=	Sub Station- Water Preparation Unit
IRP	=	Interposing Relay Panel
AUX	=	Auxiliary cabinet

DCS-LEGEND-2 LEGEND FOR CONTROL SYMBOL 1

DCS LOGIC DIAGRAMS-AMMONIA UTILITIES

AMMONIA AND UREA PRODUCTION, KINGISEPP

3000 MTPD AMMONIA

TECNIMONT IDENTIFICATION CODE			
Document Number			Revision
4124-JK-DD-217000010			03
Sheet	51	next	52
Sh.Rev.	01		
CUSTOMER IDENTIFICATION CODE			
-			03

INPUT

Logic Status	TAG
0= 1=	
0= 1=	
0= 1=	
0= 1=	
0= 1=	
0= 1=	
0= 1=	
0= 1=	
0= 1=	
0= 1=	
0= 1=	
0= 1=	
0= 1=	
0= 1=	

DCS SOFTWARE

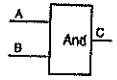

AND FUNCTION

A	0	0	1	1
B	0	1	0	1
C	0	0	0	1

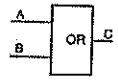

OR FUNCTION

A	0	0	1	1
B	0	1	0	1
C	0	1	1	1

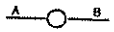

NOT FUNCTION

A	0	1
B	1	0

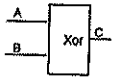

XOR FUNCTION

A	0	0	1	1
B	0	1	0	1
C	0	1	1	0

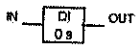

TIME DELAY ON

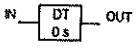

TIME DELAY OFF

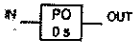

PULSE

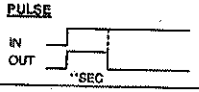

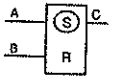

FLIP-FLOP with Set Prevalent

In Case of set and reset becomes active simultaneously, the set is prevalent.

SPECIAL FUNCTION

Formula will be specified case by case

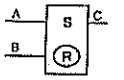

FLIP-FLOP with reset prevalent

In Case of set and reset becomes active simultaneously, the reset is prevalent.

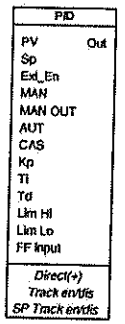

CONTROLLER

Pv: process value
Sp: external setpoint, accepted by controller when the mode is in cascade
Ext_En: enable the external switch of the controller mode, based on the input MAN, AUT, CAS
MAN: if at logic level 1 and external switch is enabled, controller mode is set to manual
MAN OUT :it defines the % value to which the controller shall be forced.
AUT: if at logic level 1 and external switch is enabled, controller mode is set to auto
CAS: if at logic level 1 and external switch is enabled, controller mode is set to cascade
Kp: external proportional parameter
Ti: external integral time
Td: external derivative time
Limit Hi: output High limit
Limit Lo: output Low limit
FF input: indicate the input used for the FF control.r
Direct(+)/Reverse(-) indicate the control action
Track en/dis: indicates that the traking option is enabled or disable
SP Track en: if enabled, when in Tracking SP follow the PV to avoid bump when the controller is back in control.
For disable, when tracking is not required.
Discrepancy alarm (2% to be finalised during pre- commissoning) shall be generated for Control valve with position transmitter (discrepancy between PID controller OP & position transmitter value)
17-LDZA/PDZA/TDZA/HDZA-XXXXX for Control Valve Discrepancy alarm where XXXXX indicates sequence number of respective tag.

OUTPUT

TAG	Logic Status
	0= 1=
	0= 1=
	0= 1=
	0= 1=
	0= 1=
	0= 1=
	0= 1=
	0= 1=
	0= 1=
	0= 1=
	0= 1=
	0= 1=
	0= 1=
	0= 1=

EuroChem

Tecnimont

DCS-LEGEND-3 LEGEND FOR CONTROL SYMBOL 2

DCS LOGIC DIAGRAMS-AMMONIA UTILITIES

AMMONIA AND UREA PRODUCTION, KINGISEPP

3000 MTPD AMMONIA

TECNIMONT IDENTIFICATION CODE	
Document Number	Revision
4124-JK-DD-217000010	03
Sheet 52 next 53	
Sh.Rev. 01	
CUSTOMER IDENTIFICATION CODE	
-	03

INPUT

Logic Status	TAG
0= 1=	
0= 1=	
0= 1=	
0= 1=	
0= 1=	
0= 1=	
0= 1=	
0= 1=	
0= 1=	
0= 1=	
0= 1=	
0= 1=	
0= 1=	

DCS SOFTWARE

IN >= 10 OUT 0 - 100 barg PAHH1234	**THRESHOLD FUNCTION** Comparison between input value IN and specific threshold value. DCS functions: output at logic level 1 when condition is satisfied	A B + OUT	**SUM FUNCTION** Output is the sum of the input signal
a a>b b OUT	**GREATER FUNCTION** Comparison between inputs value a and b. Output at logic level 1 when condition is satisfied	a a-b b OUT	**SUB FUNCTION** Perform the subtraction between a and b input signals
a a≥b b OUT	**GREATER OR EQUAL FUNCTION** Comparison between inputs value a and b. Output at logic level 1 when condition is satisfied	A B × OUT	**MULT FUNCTION** Multiply the input signals
a a<b b OUT	**LESS FUNCTION** Comparison between inputs value a and b. Output at logic level 1 when condition is satisfied	a a÷b b OUT	**DIV FUNCTION** Perform the division between a and b input signals
a a≤b b OUT	**LESS OR EQUAL FUNCTION** Comparison between inputs value a and b. Output at logic level 1 when condition is satisfied	A B Σ/n OUT	**AVG FUNCTION** Output is the average value of the input signals
a a=b b OUT	**EQUAL FUNCTION** Comparison between inputs value a and b. Output at logic level 1 when condition is satisfied	IN 0 50 SCALE 0 100 OUT	**SCALE FUNCTION** Linear scaling of the input signal based on the defined parameters IN=0 --> OUT=0 IN=50 --> OUT=100
A B Max OUT	**MAX FUNCTION** Output is equal to the maximum input value.	A B C Mo3 OUT	**Mo3 FUNCTION** Output is the middle value of the three input signals
A B Min OUT	**MIN FUNCTION** Output is equal to the minimum input value.		

OUTPUT

TAG	Logic Status
	0= 1=
	0= 1=
	0= 1=
	0= 1=
	0= 1=
	0= 1=
	0= 1=
	0= 1=
	0= 1=
	0= 1=
	0= 1=
	0= 1=
	0= 1=

EUROCHEM

Tecnimont

DCS-LEGEND-4 LEGEND FOR CONTROL SYMBOL 3

DCS LOGIC DIAGRAMS-AMMONIA UTILITIES

AMMONIA AND UREA PRODUCTION, KINGISEPP

3000 MTPD AMMONIA

TECNIMONT IDENTIFICATION CODE	
Document Number	Revision
4124-JK-DD-217000010	03
Sheet 53	next 54
Sh.Rev. 01	
CUSTOMER IDENTIFICATION CODE	
	03

INPUT

Logic Status	TAG
0= 1=	
0= 1=	
0= 1=	
0= 1=	
0= 1=	
0= 1=	
0= 1=	
0= 1=	
0= 1=	
0= 1=	
0= 1=	
0= 1=	
0= 1=	
0= 1=	

DCS SOFTWARE

In1 In2 Sw1 Sw2 Sel OUT	**SELECTOR** Output is set based on the selection switches SW1,SW2...,SWn. If selection switch 1 is active input 1 is selected, if selection switch n is active input n is selected. In case two selection switch are active at the same time, the lowest one is prevalent. In case of no selection, output is equal to input 1.	In R CTUP StSp OUT	**UP COUNTER** Count the occurence of the input channel "In" when StSp input is at logic level 1. R is used to reset to 0 the output.
		In R Init CTDW StSp OUT	**DW COUNTER** From a preset value "Init", decrease the output value at anl occurrence of the input signal "In" if StSp is at logic level 1. R is used to reset the counter at the Init value.
IN SL1 SL2 OUT	**ROC FUNCTION** Output changes according to input value with a maximum rate of change defined by parameters SL1 (+) and SL2 (-). SL1 for positive slope, SL2 for negative.	In R ∫ StSp OUT	**TOTALIZER** Totalize the input value over the time when StSp input is at logic level 1. R is used to reset to 0 the output.
Abs	**ABS FUNCTION** Output is the absolute value of the input signal.	A B C NooM OUT	**NooM** Voting Block. DCS: output is at logic level 1 when N digital inputs on M are active (logic level 1)
K	**CONSTANT VALUE** Input constant value. Is an input for other blocks. By default, if not specified can be changed by operator.		
Ind	**INDICATOR** Indicate the result of a function.	SW 1 2 3	**SELECTOR** 1st Position, 1=OUT 1 selected 2nd Position, 1=OUT 2 selected 3rd Position, 1=OUT 3 selected
LT Tag	**LT** Lamp Test. Tag indicates the relevant Push Button.		
	FALLING EDGE TRIGGER **RAISING EDGE TRIGGER** The output will be a positive pulse with duration of 1 CPU cycle time.		

OUTPUT

TAG	Logic Status
	0= 1=
	0= 1=
	0= 1=
	0= 1=
	0= 1=
	0= 1=
	0= 1=
	0= 1=
	0= 1=
	0= 1=
	0= 1=
	0= 1=
	0= 1=
	0= 1=

EUROCHEM

Tecnimont

DCS-LEGEND-5 LEGEND FOR CONTROL SYMBOL 4

DCS LOGIC DIAGRAMS-AMMONIA UTILITIES

AMMONIA AND UREA PRODUCTION, KINGISEPP

3000 MTPD AMMONIA

TECNIMONT IDENTIFICATION CODE	
Document Number	Revision
4124-JK-DD-217000010	03
Sheet 54	next 55
Sh.Rev. 01	
CUSTOMER IDENTIFICATION CODE	
-	03

INPUT

Logic Status	TAG
0= 1=	
0= 1=	
0= 1=	
0= 1=	
0= 1=	
0= 1=	
0= 1=	
0= 1=	
0= 1=	
0= 1=	
0= 1=	
0= 1=	
0= 1=	

DCS SOFTWARE

XX YYYY ZZ DESCRIPTION	**OUTPUT LINK: INTERNAL REFERENCE** DESCRIPTION: Description of Signal YYYY: Logic where signal goes to XX: Link number ZZ: Sheet number where signal goes to
XX YYYY ZZ DESCRIPTION	**INPUT LINK: INTERNAL REFERENCE** DESCRIPTION: Description of Signal YYYY: Logic where signal comes from XX: Link number ZZ: Sheet number where signal comes from
XX YYYY ZZ WWWW DESCRIPTION	**OUTPUT LINK: EXTERNAL REFERENCE** DESCRIPTION: Description of Signal YYYY: Logic where signal goes to XX: Link number ZZ: Sheet number where signal goes to WWWW: Document where signal goes to
XX YYYY ZZ WWWW DESCRIPTION	**INPUT LINK: EXTERNAL REFERENCE** DESCRIPTION: Description of Signal YYYY: Logic where signal comes from XX: Link number ZZ: Sheet number where signal comes from WWWW: Document where signal comes from

OUTPUT

TAG	Logic Status
	0= 1=
	0= 1=
	0= 1=
	0= 1=
	0= 1=
	0= 1=
	0= 1=
	0= 1=
	0= 1=
	0= 1=
	0= 1=
	0= 1=
	0= 1=

EUROCHEM

Tecnimont

DCS-LEGEND-6 LEGEND SHEET FOR DEVICE CONTROLLER 1

DCS LOGIC DIAGRAMS-AMMONIA UTILITIES

AMMONIA AND UREA PRODUCTION, KINGISEPP

3000 MTPD AMMONIA

TECNIMONT IDENTIFICATION CODE			
Document Number			Revision
4124-JK-DD-217000010			03
Sheet	55	next	56
Sh.Rev.	02		
CUSTOMER IDENTIFICATION CODE			
-			03

INPUT

Logic Status	TAG
0= 1=	
0= 1=	
0= 1=	
0= 1=	
0= 1=	
0= 1=	
0= 1=	
0= 1=	
0= 1=	
0= 1=	
0= 1=	
0= 1=	
0= 1=	

DCS SOFTWARE

"XS" in case of Operator action is allowed.

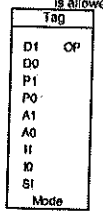

ON-OFF VALVE WITH ONE SOLENOID (1 COMMAND OPEN/CLOSE)

The Valve Control Block is the SW interface block for devices as valves. It summarizes the device status, checks its congruence and allows operator control.
The block generates malfunctions alarms in case of the following conditions (at least):
- Incongruence between limit switches statuses
- Maximum travel time elapsed
- Uncommanded status change

D1: Open limit switch (1=Open)
D0: Closed limit switch (1=Closed)
P1: Permissive to Open (1=Open)
P0: Permissive to Close (1=Close)
A1: Automatic Open (1=cmd to open)
A0: Automatic closed (1=cmd to close)
I1: Force to Open
I0: Force to Close
SI : Safety Interlock (1= Force Close)

For AFC
1= Open
0 = Close, I0 has precedence over I1

For AFO
0= Open
1 = Close, I1 has precedence for I0

SI is used to force in valve to safe position without considering the module AUTO/MANUAL mode.
OP: Command to Open/Close
Mode: Auto/Manual (1=Auto, 0=Manual)
AFC/AFO indicated the failure of the valve (air failure closed –AFC-, air failure open –AFO-)
Functional philosophy is as follow:

P1/P0 inputs are used as permissive to OPEN/CLOSE manually the valve from DCS faceplate; manual commands are available / enabled only if the module is in MANUAL mode. It is important to check and agreed with Vendor the default value of these inputs in case they are not connected (normally default value is 1).

A1/A0 inputs are used to OPEN/CLOSE automatically the valve by using logic/sequence conditions; they are enabled only if the module is in AUTO mode.
I1/I0 inputs are used to force in OPEN/CLOSE position the valve without considering the module AUTO/MANUAL mode.
Discrepancy alarm shall be generated for ON-OFF valve based on Solenoid valve O/P & Valve limit switch feedback.
17-XZDA-XXXX for On-off Valve Discrepancy Alarm where XXXX indicates sequence number of respective valves

"XS" in case of Operator action is allowed.

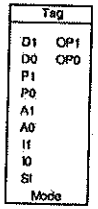

SFC - Signal fail close (normally closed). Valve that goes to closed position if control signal or air fails
SFO - Signal fail open (normally opened). Valve that goes to opened position if control signal or air fails
AFL - Air failed lock. Valve will keep the last position if control signal or air fails

ON-OFF VALVE WITH TWO COMMANDS (ONE FOR OPEN COMMAND AND ONE FOR CLOSE COMMAND

The Valve Control Block is the SW interface block for devices as valves. It summarizes the device status, checks its congruence and allows operator control.
The block generates malfunctions alarms in case of the following conditions (at least):
- Incongruence between limit switches statuses
- Maximum travel time elapsed
- Uncommanded status change

D1: Open limit switch (1=Open)
D0: Closed limit switch (1=Closed)
P1: Permissive to Open (1=Enabled)
P0: Permissive to Close (1=Enabled)
A1: Automatic Open (1=cmd to open)
A0: Automatic closed (1=cmd to close)
I1: Force to Open
I0: Force to Close
SI : Safety Interlock (1= Force Close)

For AFC
1= Open
0 = Close, I0 has precedence over I1

For AFO
0= Open
1 = Close, I1 has precedence for I0

SI is used to force in valve to safe position without considering the module AUTO/MANUAL mode.
OP1: Command to Open
OP0: Command to Close
Mode: Auto/Manual (1=Auto, 0=Manual)
Functional philosophy is as follow:
P1/P0 inputs are used as permissive to OPEN/CLOSE manually the valve from DCS faceplate; manual commands are available / enabled only if the module is in MANUAL mode. It is important to check and agreed with Vendor the default value of these inputs in case they are not connected (normally default value is 1).

A1/A0 inputs are used to OPEN/CLOSE automatically the valve by using logic/sequence conditions; they are enabled only if the module is in AUTO mode.
I1/I0 inputs are used to force in OPEN/CLOSE position the valve without considering the module AUTO/MANUAL mode.
Discrepancy alarm shall be generated for ON-OFF valve based on Solenoid valve O/P & Valve limit switch feedback.
17-XZDA-XXXX for On-off Valve Discrepancy Alarm where XXXXX indicates sequence number of respective valves

OUTPUT

TAG	Logic Status
	0= 1=
	0= 1=
	0= 1=
	0= 1=
	0= 1=
	0= 1=
	0= 1=
	0= 1=
	0= 1=
	0= 1=
	0= 1=
	0= 1=
	0= 1=

EUROCHEM	DCS-LEGEND-7 LEGEND SHEET FOR DEVICE CONTROLLER 2 DCS LOGIC DIAGRAMS-AMMONIA UTILITIES AMMONIA AND UREA PRODUCTION, KINGISEPP	TECNIMONT IDENTIFICATION CODE Document Number 4124-JK-DD-217000010 Revision 03 Sheet 56 next 57 Sh.Rev. 01
Tecnimont	3000 MTPD AMMONIA	CUSTOMER IDENTIFICATION CODE - 03

INPUT

Logic Status	TAG
0= 1=	
0= 1=	
0= 1=	
0= 1=	
0= 1=	
0= 1=	
0= 1=	
0= 1=	
0= 1=	
0= 1=	
0= 1=	
0= 1=	
0= 1=	
0= 1=	

DCS SOFTWARE

"XS" in case of Operator action is allowed.

MOV	
D1	OP1
D0	OP0
P1	OP2
P0	
A1	
A0	
I1	
I0	
SI	
Mode	

MOV VALVE

The Valve Control Block is the SW interface block for devices as valves. It summarizes the device status, checks its congruence and allows operator control.
The block generates malfunctions alarms in case of the following conditions (at least):
- Incongruence between limit switches statuses
- Maximum travel time elapsed
- Uncommanded status change

D1: Open limit switch (1=Open)
D0: Closed limit switch (1=Closed)
P1: Permissive to Open (1=Enabled)
P0: Permissive to Close (1=Enabled)
A1: Automatic Open (1=cmd to open)
A0: Automatic closed (1=cmd to close)
I1: Force to Open
I0: Force to Close
SI : Safety Interlock (1= Force Close)
SI is used to force in valve to safe position without considering the module AUTO/MANUAL mode.
OP1: Command to Open (Motor Fw)
OP0: Stop Command
OP2: Command to Close (Motor Bw)
Mode: Auto/Manual (1=Auto, 0=Manual)
Functional philosophy is as follow:
P1/P0 inputs are used as permissive to OPEN/CLOSE manually the valve from DCS faceplate; manual commands are available / enabled only if the module is in MANUAL mode. It is important to check and agreed with Vendor the default value of these inputs in case they are not connected (normally default value is 1).

A1/A0 inputs are used to OPEN/CLOSE automatically the valve by using logic/sequence conditions; they are enabled only if the module is in AUTO mode.
I1/I0 inputs are used to force in OPEN/CLOSE position the valve without considering the module AUTO/MANUAL mode.
Discrepancy alarm shall be generated for MOV based on O/P command to MOV & actual MOV limit switch feedback.
17-MLDA for MOV Discrepancy alarm where XXXXX indicates sequence number of respective motors

"XS" in case of Operator action is allowed.

Motor	
D	OP1
P1	OP0
P0	
A1	
A0	
I1	
I0	
SI	
Mode	

MOTOR

The Motor Control Block is the SW interface block for devices as motors, heaters, etc... It summarizes the device status, checks its congruence and allows operator control.
The block generates malfunctions alarms in case of the following conditions (at least):
- Command fail
- Uncommanded status change

D: Running (1=Running)
P1: Permissive to Start (1=Enabled)
P0: Permissive to Stop (1=Enabled)
A1: Automatic Start (1=cmd to start)
A0: Automatic stop (1=cmd to stop)
I1: Force to Start
I0: Force to Stop
SI : Safety Interlock (1= Force stop)
SI is used to force in valve to safe position without considering the module AUTO/MANUAL mode. After force action, the control block will be switched to Manual mode
OP1: Command to Start (1=Start) -Pulse 3 sec
OP0: Command to Stop (0=Stop)-.STOP is a pulse of 3 sec ~~only in case of Manual STOP from operator console~~
In case STOP command is originated by DCS STOP logic , it will be latched and kept to open status (0=STOP) to protect the motors until DCS STOP logic is no more active.
Mode: Auto/Manual (0=Auto, 1=Manual)
Functional philosophy is as follow:
P1/P0 inputs are used as permissive to START/STOP manually the motor from DCS faceplate; manual command is available / enabled only if the module is in MANUAL mode. It is important to check and agreed with Vendor the default value of these inputs in case they are not connected (normally default value is 1).

A1/A0 inputs are used to START/STOP automatically the motor by using logic/sequence conditions; they are enabled only if the module is in AUTO mode.
I1/I0 inputs are used to force in START/STOP condition the motor without considering the module AUTO/MANUAL mode.
Discrepancy alarm shall be generated for motor based on start/ stop/trip command to motor & running indication.
17-MLDA for Motor Discrepancy alarm where XXXXX indicates sequence number of respective motors

OUTPUT

TAG	Logic Status
	0= 1=
	0= 1=
	0= 1=
	0= 1=
	0= 1=
	0= 1=
	0= 1=
	0= 1=
	0= 1=
	0= 1=
	0= 1=
	0= 1=
	0= 1=
	0= 1=

EUROCHEM

Tecnimont

DCS-LEGEND-8 TYPICAL FOR DUTY/STANDBY LOGIC (01 OF 04)

DCS LOGIC DIAGRAMS-AMMONIA PROCESS

AMMONIA AND UREA PRODUCTION, KINGISEPP

3000 MTPD AMMONIA

TECNIMONT IDENTIFICATION CODE	
Document Number	Revision
4124-JK-DD-211000010	03
Sheet 57 next 58	
Sh.Rev. 02	
CUSTOMER IDENTIFICATION CODE	
	01

INPUT

Logic/Status	TAG
0= 1=	
0= 1=	
0= 1=	
0= 1=	
0= 1=	
0= 1=	
0= 1=	
0= 1=	
0= 1=	
0= 1=	
0= 1=	
0= 1=	
0= 1=	

DCS SOFTWARE

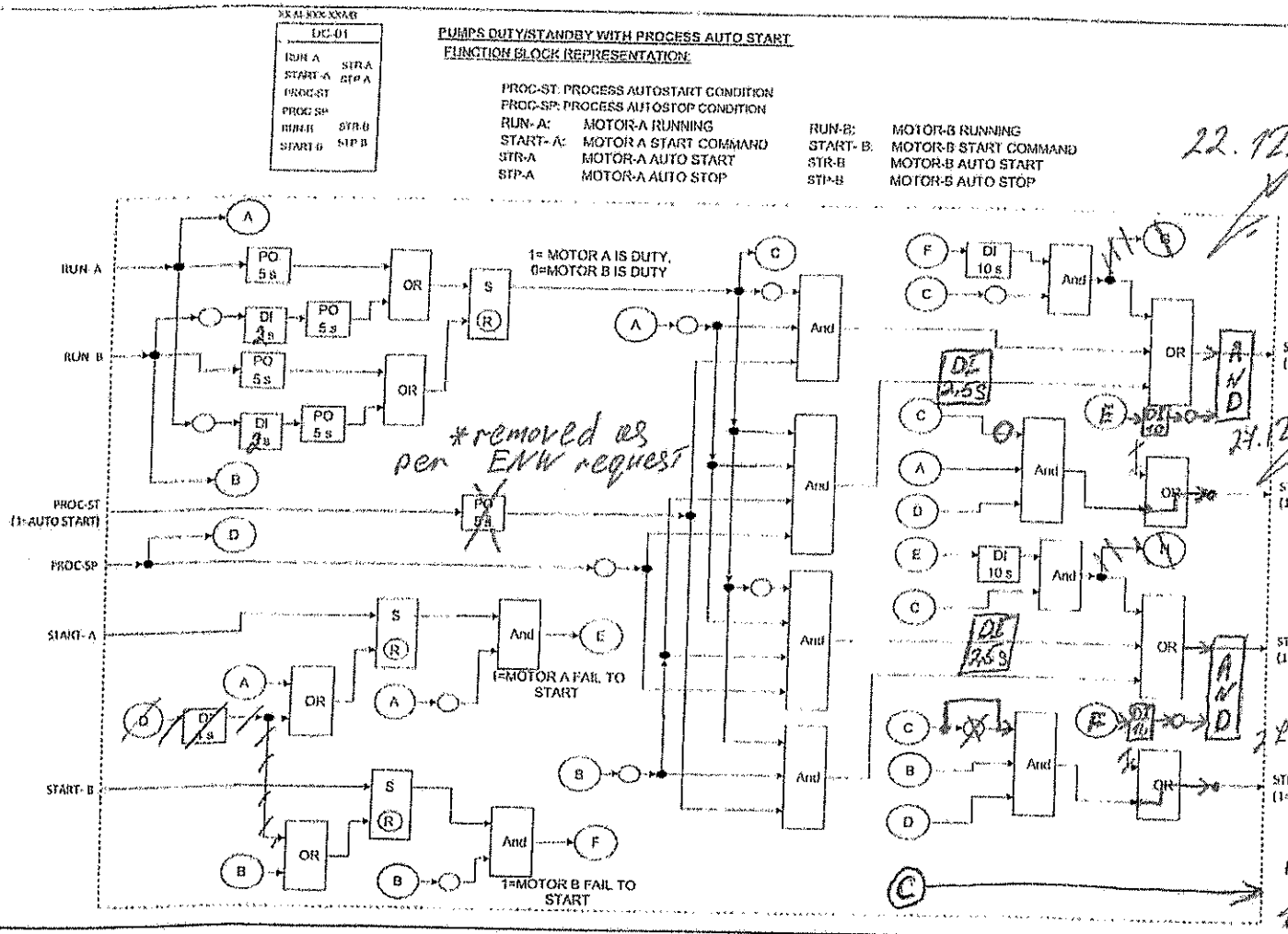

OUTPUT

TAG	Logic Status
	0= 1=
	0= 1=
	0= 1=
	0= 1=
	0= 1=
	0= 1=
	0= 1=
	0= 1=
	0= 1=
	0= 1=
	0= 1=
	0= 1=
	0= 1=

PROC_SP is acting on both pumps

DCS-LEGEND-8

DC-02 only one pump should be in operation PROC-ST acting on DUTY pump.

EUROCHEM

Tecnimont

DCS-LEGEND-8 TYPICAL FOR DUTY/STANDBY LOGIC (01 OF 04)

DCS LOGIC DIAGRAMS-AMMONIA PROCESS

AMMONIA AND UREA PRODUCTION, KINGISEPP

3000 MTPD AMMONIA

TECNIMONT IDENTIFICATION CODE	
Document Number	Revision
4124-JK-DO-211000010	03
Sheet	next
Sh.Rev. 02	
CUSTOMER IDENTIFICATION CODE	
-	03

DC-02

DCS SOFTWARE

INPUT

Logic Status	TAG
0= 1=	
0= 1=	
0= 1=	
0= 1=	
0= 1=	
0= 1=	
0= 1=	
0= 1=	
0= 1=	
0= 1=	
0= 1=	
0= 1=	
0= 1=	
0= 1=	

OUTPUT

TAG	Logic Status
	0= 1=
	0= 1=
	0= 1=
	0= 1=
	0= 1=
	0= 1=
	0= 1=
	0= 1=
	0= 1=
	0= 1=
	0= 1=
	0= 1=
	0= 1=

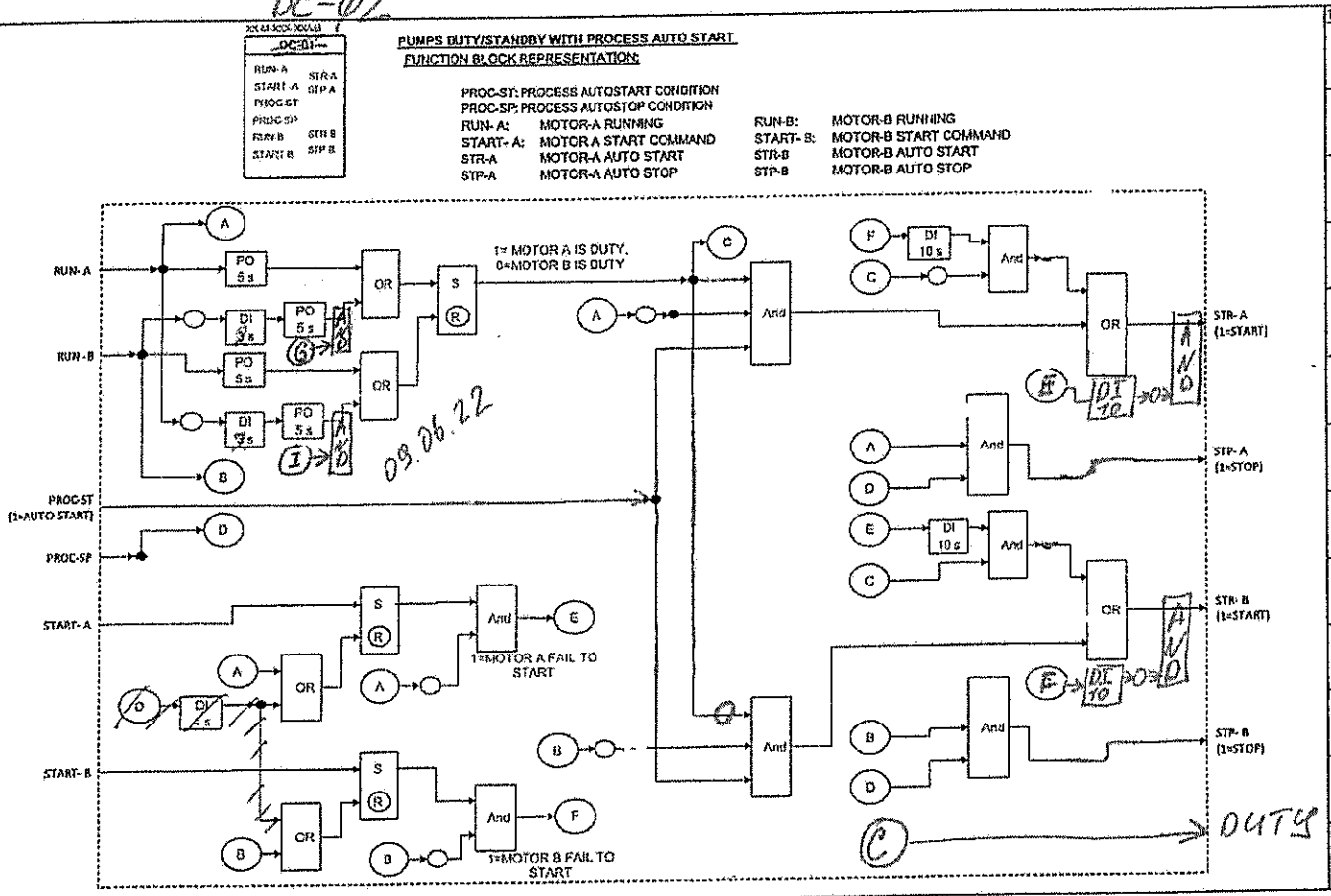

MOTOR A AVAILABLE 1=OK → G

MOTOR B AVAILABLE 1=OK → I

PROC_SP is acting on both pumps

EUROCHEM

DCS-LEGEND-8 A TYPICAL FOR DUTY/STANDBY LOGIC (01 OF 04)
DCS LOGIC DIAGRAMS-AMMONIA PROCESS
AMMONIA AND UREA PRODUCTION, KINGISEPP

Technimont

3000 MTPD AMMONIA

TECHNIMONT IDENTIFICATION CODE	
Document Number	Revision
4124-JK-DD-211000010	03
Sheet next	
Sh.Rev. 02	
CUSTOMER IDENTIFICATION CODE	
	03

DC-04 motor switchover only in case of motor fail to start & switchgear failure for duty pump (running) ie - Not available (XSA)

INPUT | DCS SOFTWARE | OUTPUT

Logic Status	TAG
0= 1=	
0= 1=	
0= 1=	
0= 1=	
0= 1=	
0= 1=	
0= 1=	
0= 1=	
0= 1=	
0= 1=	
0= 1=	
0= 1=	

DC-02

PUMPS DUTY/STANDBY WITH PROCESS AUTO START
FUNCTION BLOCK REPRESENTATION:

PROC-ST: PROCESS AUTOSTART CONDITION
PROC-SP: PROCESS AUTOSTOP CONDITION

RUN- A:	MOTOR-A RUNNING	RUN-B:	MOTOR-B RUNNING
START- A:	MOTOR A START COMMAND	START- B:	MOTOR-B START COMMAND
STR-A	MOTOR-A AUTO START	STR-B	MOTOR-B AUTO START
STP-A	MOTOR-A AUTO STOP	STP-B	MOTOR-B AUTO STOP

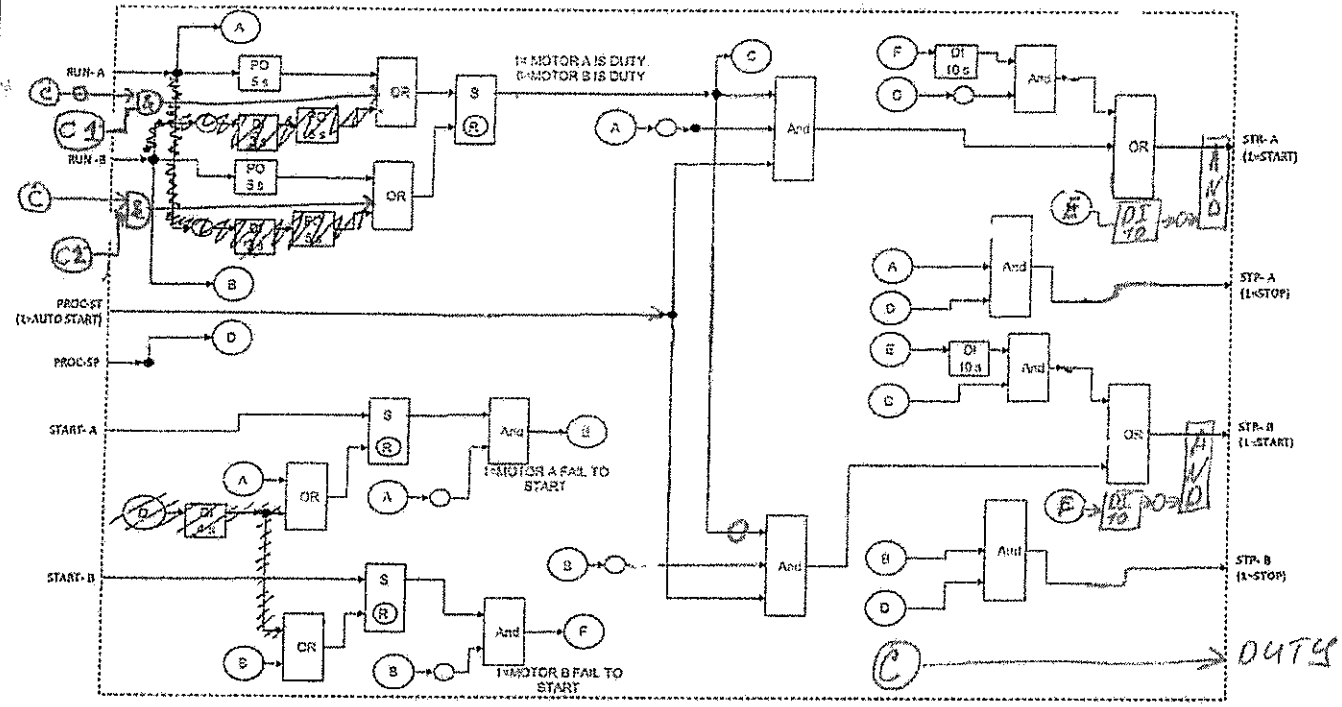

TAG	Logic Status
	0= 1=
	0= 1=
	0= 1=
	0= 1=
	0= 1=
	0= 1=
	0= 1=
	0= 1=
	0= 1=
	0= 1=
	0= 1=
	0= 1=

Run-B — PO 5 s — AND — C1
PROC-SP
XSA MOTOR A

Run-A — PO 5 s — AND — C2
PROC-SP
XSA MOTOR B

EUROCHEM

Tecnimont

DCS-LEGEND-9 TYPICAL FOR DUTY/STANDBY LOGIC (02 OF 04)

DCS LOGIC DIAGRAMS-AMMONIA UTILITIES

AMMONIA AND UREA PRODUCTION, KINGISEPP

3000 MTPD AMMONIA

TECNIMONT IDENTIFICATION CODE	
Document Number	Revision
4124-JK-DD-217000010	03
Sheet 58 next 59	
Sh.Rev. 01	
CUSTOMER IDENTIFICATION CODE	
-	03

INPUT

Logic Status	TAG
0= 1=	
0= NOT RUNNING 1= RUNNING	XX-XS -MXXXX MCC DI
0= 1=	
0= NOT AVLB 1= AVAILABLE	XX-XSA -MXXXX MCC DI
0= 1=	
0= 1=	
0= LOCAL 1= REMOTE	XX-XSR -MXXXX MCC DI
0= 1=	
0= 1=	
0= 1=	
0= NORMAL 1= TRIP	XST -MXXX -OR DCS SDI ESD
0= 1=	
0= 1=	

DCS SOFTWARE

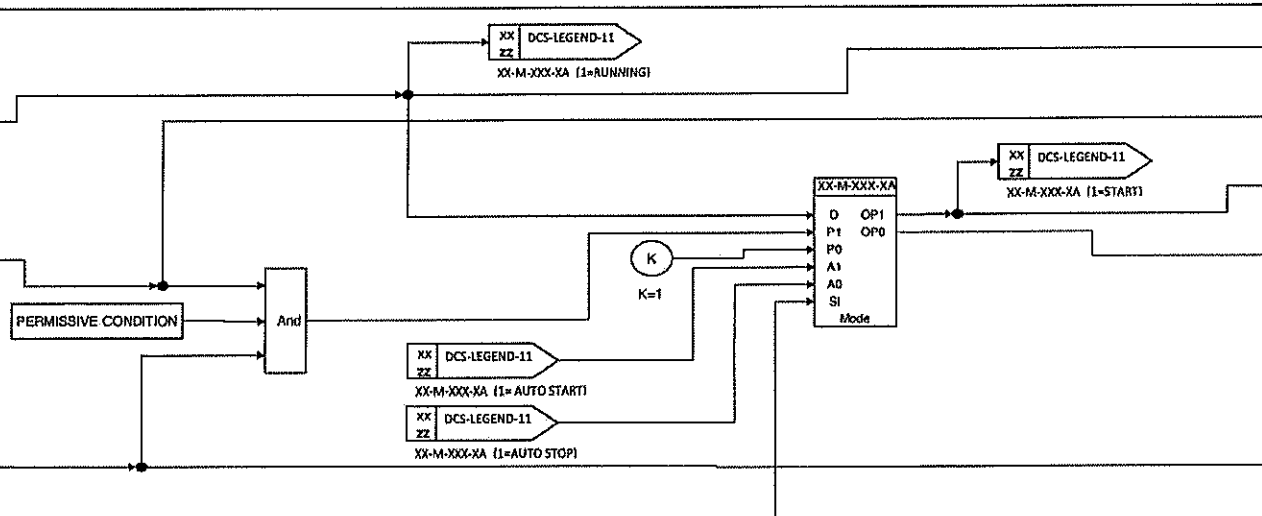

OUTPUT

TAG	Logic Status
XX-XL -MXXXX DCS	0= NOT RUNNING 1= RUNNING
XX-XLA -MXXXX DCS	0= NOT AVLB 1= AVAILABLE
XX-XYST -MXXXX MCC DO	0= NO ACTION 1= START
XX-XYSP -MXXXX MCC DO	0= STOP 1= NO ACTION
	0= 1=
	0= 1=
XX-XLR -MXXXX DCS	0= LOCAL 1= REMOTE
	0= 1=
	0= 1=
	0= 1=
	0= 1=
	0= 1=
	0= 1=

Notes :

1. STOP (0=STOP) IS A PULSE OF 3 SEC ONLY IN CASE OF MANUAL STOP FROM OPERATOR CONSOLE
. IN CASE STOP COMMAND IS ORIGINATED BY DCS STOP LOGIC, IT WILL BE LATCHED AND KEPT TO OPEN STATUS (0 = STOP) TO PROTECT THE MOTORS UNTIL DCS STOP LOGIC IS NO MORE ACTIVE.

EuroChem

Tecnimont

DCS-LEGEND-10 TYPICAL FOR DUTY/STANDBY LOGIC (03 OF 04)

DCS LOGIC DIAGRAMS-AMMONIA UTILITIES

AMMONIA AND UREA PRODUCTION, KINGISEPP

3000 MTPD AMMONIA

TECNIMONT IDENTIFICATION CODE		
Document Number		Revision
4124-JK-DD-2170X0010		03
Sheet 59	next 60	
Sh.Rev. 01		
CUSTOMER IDENTIFICATION CODE		
		03

INPUT

Logic Status	TAG
0= 1=	
0= NOT RUNNING 1= RUNNING	XX-XS -MXXXX MCC DI
0= 1=	
0= NOT AVLB 1= AVAILABLE	XX-XSA -MXXXX MCC DI
0= 1=	
0= 1=	
0= LOCAL 1= REMOTE	XX-XSR -MXXXX MCC DI
0= 1=	
0= 1=	
0= 1=	
0= NORMAL 1= TRIP	XST -MXXX -OR DCS SDI ESD
0= 1=	
0= 1=	

DCS SOFTWARE

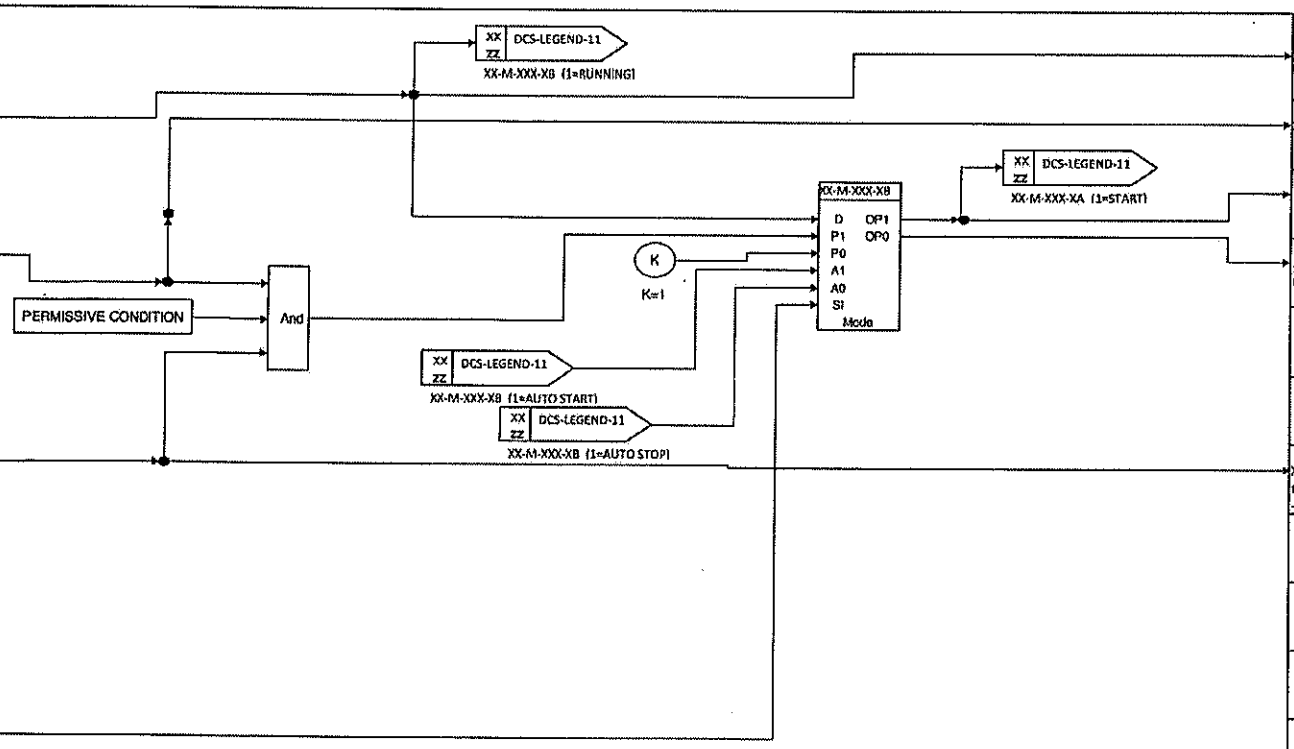

Notes :

1. STOP (0=STOP) IS A PULSE OF 3 SEC ONLY IN CASE OF MANUAL STOP FROM OPERATOR CONSOLE
. IN CASE STOP COMMAND IS ORIGINATED BY DCS STOP LOGIC, IT WILL BE LATCHED AND KEPT TO OPEN STATUS (0 = STOP) TO PROTECT THE MOTORS UNTIL DCS STOP LOGIC IS NO MORE ACTIVE.

OUTPUT

TAG	Logic Status
XX-XL -MXXXX DCS -	0= NOT RUNNING 1= RUNNING
XX-XLA -MXXXX DCS -	0= NOT AVLB 1= AVAILABLE
XX-XYST -MXXXX MCC DO	0= NO ACTION 1= START
XX-XYSP -MXXXX MCC DO	0= STOP 1= NO ACTION
	0= 1=
	0= 1=
XX-XLR -MXXXX DCS -	0= LOCAL 1= REMOTE
	0= 1=
	0= 1=
	0= 1=
	0= 1=
	0= 1=
	0= 1=

EuroChem

Tecnimont

DCS-LEGEND-11 TYPICAL FOR DUTY/STANDBY LOGIC (04 OF 04)

DCS LOGIC DIAGRAMS-AMMONIA UTILITIES

AMMONIA AND UREA PRODUCTION, KINGISEPP

3000 MTPD AMMONIA

TECNIMONT IDENTIFICATION CODE	
Document Number	Revision
4124-JK-DD-217000010	03
Sheet 60 next 61	
Sh.Rev. 01	
CUSTOMER IDENTIFICATION CODE	
-	03

INPUT

Logic Status	TAG
0= 1=	
0= 1=	
0= 1=	
0= 1=	
0= 1=	
0= 1=	
0= 1=	
0= 1=	
0= 1=	
0= 1=	
0= 1=	
0= 1=	
0= 1=	

DCS SOFTWARE

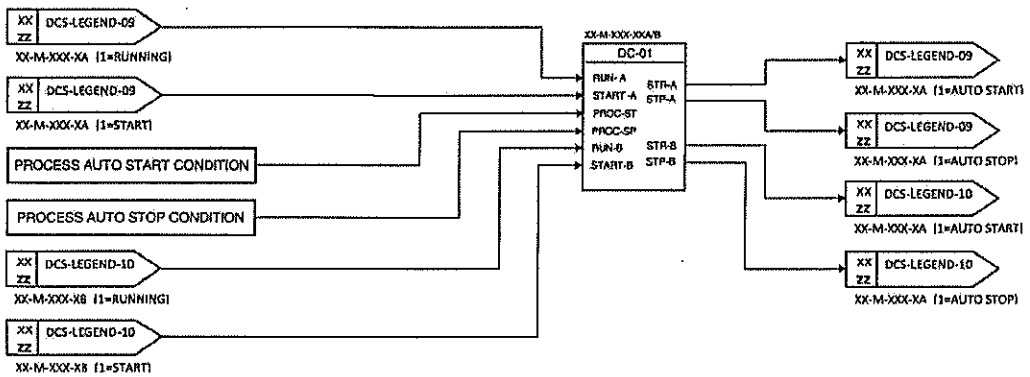

OUTPUT

TAG	Logic Status
	0= 1=
	0= 1=
	0= 1=
	0= 1=
	0= 1=
	0= 1=
	0= 1=
	0= 1=
	0= 1=
	0= 1=
	0= 1=
	0= 1=
	0= 1=

EUROCHEM

Tecnimont

DCS-LEGEND-12 TYPICAL FOR LAMP TEST

DCS LOGIC DIAGRAMS-AMMONIA UTILITIES

AMMONIA AND UREA PRODUCTION, KINGISEPP

3000 MTPD AMMONIA

TECNIMONT IDENTIFICATION CODE			
Document Number		Revision	
4124-JK-DD-217000010		03	
Sheet	61	next	62
Sh.Rev.	01		
CUSTOMER IDENTIFICATION CODE			
-		03	

INPUT

Logic Status	TAG
0= 1=	
0= 1=	
0= NO ACTION 1= LAMP TEST	XX-HS-YYYYY LP DI
0= 1=	
0= 1=	
0= 1=	
0= 1=	
0= 1=	
0= 1=	
0= 1=	
0= 1=	
0= 1=	
0= 1=	

DCS SOFTWARE

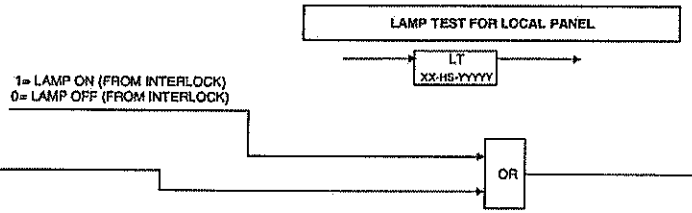

*Where,
XX - Unit Number
YYYY - Tag Number

OUTPUT

TAG	Logic Status
	0= 1=
	0= 1=
XX-HL-YYYYY LP DO	0= LAMP OFF 1= LAMP ON
	0= 1=
	0= 1=
	0= 1=
	0= 1=
	0= 1=
	0= 1=
	0= 1=
	0= 1=
	0= 1=
	0= 1=
	0= 1=

EUROCHEM	DCS-LEGEND-13 BAD PV & DEVIATION / GENERAL ALARM DCS LOGIC DIAGRAMS-AMMONIA UTILITIES AMMONIA AND UREA PRODUCTION, KINGISEPP	TECNIMONT IDENTIFICATION CODE Document Number: 4124-JK-DG-217000010 — Revision: 03 Sheet 62 next 63 Sh.Rev. 01
Tecnimont	3000 MTPD AMMONIA	CUSTOMER IDENTIFICATION CODE - 03

INPUT		DCS SOFTWARE	OUTPUT	
Logic Status	TAG		TAG	Logic Status
0= 1=				0= 1=
0= 1=				0= 1=
0= 1=				0= 1=
0= 1=				0= 1=
0= 1=				0= 1=
0= 1=				0= 1=
0= 1=				0= 1=
0= 1=				0= 1=
0= 1=				0= 1=
0= 1=				0= 1=
0= 1=				0= 1=
0= 1=				0= 1=
0= 1=				0= 1=
0= 1=				0= 1=

The on-line diagnostic of 4-20 mA transmitters, in case of detected fault, drives the output to a predefined Bad value (Low or High) out of the normal or extended range in order to allow the failure detection by the safety system.
NAMUR 43 recommendations is applied, as follows:

Transmitter measuring range : 4 <= I <= 20 mA (corresponding to Low and High transmitter calibration limits)

Transmitter extended range : 3.8 <= I <= 20.5 mA (range where the signal is considered valid)

Low Bad signal : 0 <= I <= 3.6 mA

High Bad signal : I >= 21 mA

Deviation & General Alarm:

1) Deviation alarm for Control Valve having Position Feedback:
Alarm shall be generated based on on deviation between the position feedback and the current position of the Smart Positioner / HART Read back signal (activated when the difference is more than 5% for 6 seconds and the range change rate is more than 2% per second for 10 seconds);

2) Deviation alarm for Control Valve without having any Position Feedback:
Alarm shall be generated based on on deviation between the Output (OUT) of respective PID Controller and the current position of the Smart Positioner / HART Read back signal (activated when the difference is more than 5% for 6 seconds and the range change rate is more than 2% per second for 10 seconds);

3) Alarm for Temp transmitter for Heat tracing Temp elements:
Alarm on the electronics temperatures of heated Smart Instruments (activated if the temperature is lesser then +5 and

EUROCHEM

Tecnimont

DCS-LEGEND-14 MOTOR FWD/REV

DCS LOGIC DIAGRAMS-AMMONIA UTILITIES

AMMONIA AND UREA PRODUCTION, KINGISEPP

3000 MTPD AMMONIA

TECNIMONT IDENTIFICATION CODE	
Document Number	Revision
4124-JK-DD-217000010	03
Sheet 63 next 100	
Sh.Rev. 03	
CUSTOMER IDENTIFICATION CODE	
-	03

INPUT

Logic Status	TAG
0= 1=	
0= 1=	
0= 1=	
0= 1=	
0= 1=	
0= 1=	
0= 1=	
0= 1=	
0= 1=	
0= 1=	
0= 1=	
0= 1=	
0= 1=	
0= 1=	

DCS SOFTWARE

"XS" in case of Operator action is allowed.

Motor	
D1	
D2	OP1
P1	OP2
P0	OP0
A1	
A2	
A0	
I1	
I0	
SI	
Mode	

MOTOR (With Forward / Reverse Functionality)

The Motor Control Block is the SW interface block for devices as motors, heaters, etc.....It summarizes the device status, checks its congruence and allows operator control.

The block generates malfunctions alarms in case of the following conditions (at least):

- Command fail
- Uncommanded status change.

D1: Running Forward (1=Running forward)

D2: Running Backward (1=Running backard)

P1: Permissive to Start (1=Enabled)

P0: Permissive to Stop (1=Enabled)

A1: Automatic Start forward (1=cmd to start forward)

A2: Automatic Start Backward (1=cmd to start backward)

A0: Automatic stop (1=cmd to stop)

I1: Force to Start

I0: Force to Stop

SI : Safety Interlock (1= Force stop)

SI is used to force in valve to safe position without considering the module AUTO/MANUAL mode.After force action, the control block will be switched to Manual mode

OP1: Command to Start Forward(1=Start forward) -Pulse 3 sec

OP2: Command to Start Backward (1=Start backward) -Pulse 3 sec

OP0: Command to Stop (0=Stop)-.STOP is a pulse of 3 sec,only in case of Manual STOP from operator console.

In case STOP command is originated by DCS STOP logic , it will be latched and kept to open status (0=STOP) to protect the motors until DCS STOP logic is no more active.

Mode: Auto/Manual (0=Auto, 1=Manual)

Functional philosophy is as follow:

P1/P0 inputs are used as permissive to START/STOP manually the motor from DCS faceplate; manual command is available / enabled only if the module is in MANUAL mode. It is important to check and agreed with Vendor the default value of these inputs in case they are not connected (normally default value is 1).

A1/A2/A0 inputs are used to START/STOP automatically the motor by using logic/sequence conditions; they are enabled only if the module is in AUTO mode.

I1/I0 inputs are used to force in START/STOP condition the motor without considering the module AUTO/MANUAL mode.

OUTPUT

TAG	Logic Status
	0= 1=
	0= 1=
	0= 1=
	0= 1=
	0= 1=
	0= 1=
	0= 1=
	0= 1=
	0= 1=
	0= 1=
	0= 1=
	0= 1=
	0= 1=
	0= 1=

EuroChem	17-ID-0101 BLOWDOWN AND INDUSTRIAL WATER SHUT-OFF DCS LOGIC DIAGRAMS-AMMONIA UTILITIES AMMONIA AND UREA PRODUCTION, KINGISEPP	TECNIMONT IDENTIFICATION CODE Document Number 4124-JK-DD-217000010 Revision 03 Sheet 100 next 110 Sh.Rev. 02 CUSTOMER IDENTIFICATION CODE - 03
Tecnimont	3000 MTPD AMMONIA	

INPUT | DCS SOFTWARE | OUTPUT

Logic Status	TAG
0= 1=	
0= 1=	
0= 1=	
0= 1=	
0= 1=	
0= 1=	
0= 1=	17-LT -15040 Field AI
0= 1=	
0= 1=	
0= 1=	
0= 1=	
0= 1=	
0= 1=	

TO BE DEVELOPED IN WTU DCS NODE

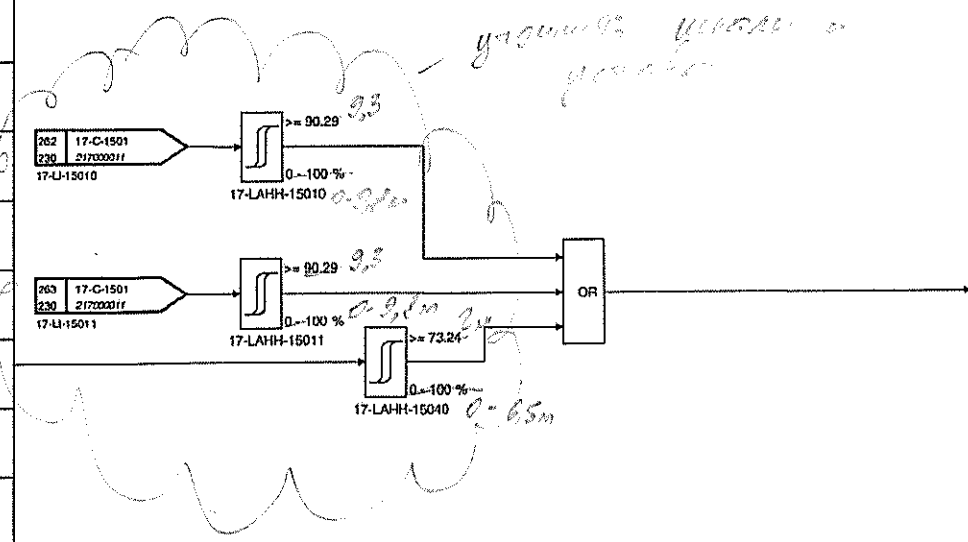

TAG	Logic Status
	0= 1=
	0= 1=
	0= 1=
	0= 1=
	0= 1=
17-FY -15001 -B Field DO	0= CLOSE 1= OPEN
	0= 1=
	0= 1=
17-LY -15011 -C Field DO	0= CLOSE 1= OPEN
	0= 1=
	0= 1=
	0= 1=
	0= 1=

NOTE
1. UPON ACTIVATION OF INTERLOCK THE 17-FIC-15001 SHALL BE PUT IN MAN MODE & O/P SHALL BE SET TO 0 %
   AFTER INTERLOCK RESET THE 17-FIC-15001 CONTROLLER SHALL BE SET MANUAL TO AUTO MODE BY OPERATOR
2. UPON ACTIVATION OF INTERLOCK THE 17-LIC-15011 SHALL BE PUT IN MAN MODE & O/P SHALL BE SET TO 0 %
   AFTER INTERLOCK RESET THE 17-LIC-15011 CONTROLLER SHALL BE SET MANUAL TO AUTO MODE BY OPERATOR

P&ID:4124-XZ-DM-21715005 / 4124-XZ-DM-21715011

<02>

EUROCHEM

Tecnimont

17-ID-0201 OSPC PUMP START / STOP

DCS LOGIC DIAGRAMS-AMMONIA UTILITIES

AMMONIA AND UREA PRODUCTION, KINGISEPP

3000 MTPD AMMONIA

TECNIMONT IDENTIFICATION CODE	
Document Number	Revision
4124-JK-DD-217000010	03
Sheet 110 next 130	
Sh.Rev. 01	
CUSTOMER IDENTIFICATION CODE	
-	03

INPUT

Logic Status	TAG
0= 1=	
0= NOT RUNNING 1= RUNNING	17-XS -M021 MCC DI -
0= NOT AVLB 1= AVAILABLE	17-XSA -M021 MCC DI -
0= LOCAL 1= REMOTE	17-XSR -M021 MCC DI -
0= 1=	
0= 1=	17-LT -02084 Field AI -
0= 1=	
0= 1=	
0= NO ACTION 1= TRIP	17-XST -M021-OR DCS SDI ESD
0= 1=	
0= 1=	
0= 1=	
0= 1=	

DCS SOFTWARE

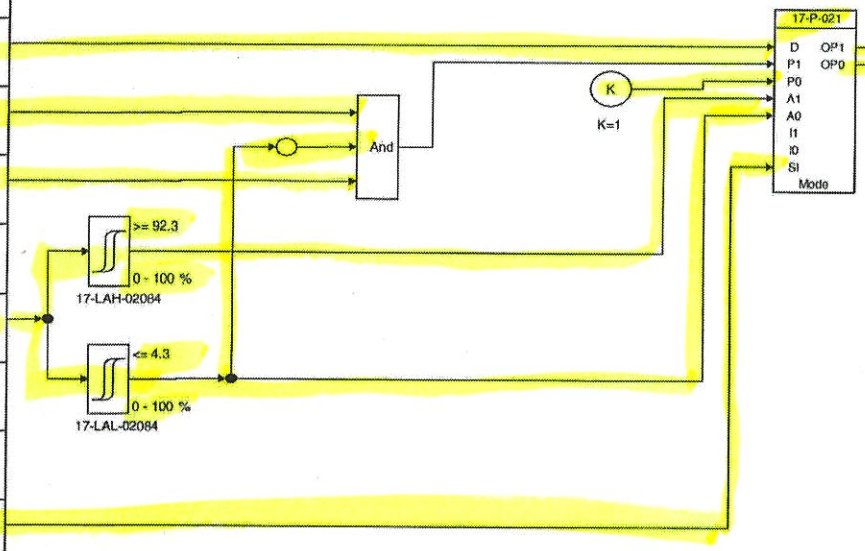

OUTPUT

TAG	Logic Status
	0= 1=
17-XYST -M021 MCC DO -	0= NO ACTION 1= START
17-XYSP -M021 MCC DO -	0= STOP 1= NO ACTION
	0= 1=
	0= 1=
	0= 1=
	0= 1=
	0= 1=
	0= 1=
	0= 1=
	0= 1=
	0= 1=
	0= 1=

Note

Interlock activation alarm shall be generated based onactivatino of 17-LAH-02084 or 17-LAL-02084. Interlock is auto reset

P&ID:4124-XZ-DM-21702020

MCC 07.02.25

07.02.25

07.02.25

22/2/2022

21.02.22

21.02.2022

EUROCHEM

Tecnimont

17-ID-0301_shA DEMI WATER PUMPS

DCS LOGIC DIAGRAMS-AMMONIA UTILITIES

AMMONIA AND UREA PRODUCTION, KINGISEPP

3000 MTPD AMMONIA

TECNIMONT IDENTIFICATION CODE	
Document Number	Revision
4124-JK-DD-217000010	03
Sheet 130 next 132	
Sh.Rev. 02	
CUSTOMER IDENTIFICATION CODE	
-	03

INPUT

Logic Status	TAG
0= NORMAL 1= TRIP	17-XST-M032-AOR DCS SDI ESD
0= NOT RUNNING 1= RUNNING	17-XS -M032 -A MCC DI
0= NOT AVLB 1= AVAILABLE	17-XSA -M032 -A MCC DI
0= LOCAL 1= REMOTE	17-XSR -M032 -A MCC DI
0= 1=	
0= 1=	
0= NOT RUNNING 1= RUNNING	17-XS -M032 -B MCC DI
0= NOT AVLB 1= AVAILABLE	17-XSA -M032 -B MCC DI
0= LOCAL 1= REMOTE	17-XSR -M032 -B MCC DI
0= 1=	
0= 1=	
0= 1=	
0= NORMAL 1= TRIP	17-XST-M032-BOR DCS SDI ESD

DCS SOFTWARE

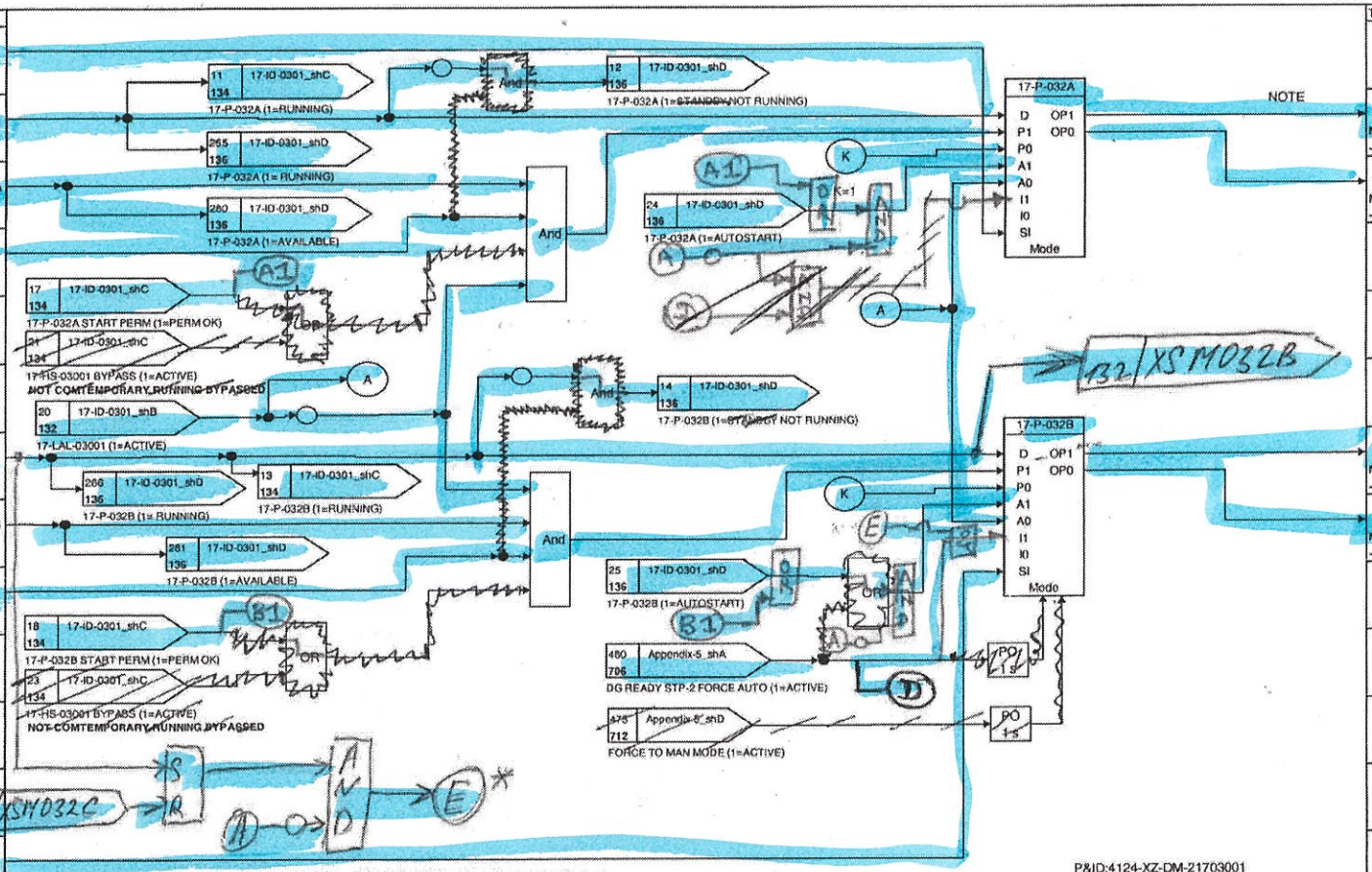

OUTPUT

TAG	Logic Status
	0= 1=
17-XYST -M032 -A MCC DO	0= NO ACTION 1= START
17-XYSP -M032 -A MCC DO	0= STOP 1= NO ACTION
	0= 1=
	0= 1=
	0= 1=
17-XYST -M032 -B MCC DO	0= NO ACTION 1= START
17-XYSP -M032 -B MCC DO	0= STOP 1= NO ACTION
	0= 1=
	0= 1=
	0= 1=
	0= 1=
	0= 1=

21.02.25 ГКС 21.02.25 21/3/22 SF 21.02.25 25.05.22 ENW 25.05.22 SEQ only one pump (best running) will be started

EUROCHEM

Tecnimont

17-ID-0301_shB DEMI WATER PUMPS

DCS LOGIC DIAGRAMS-AMMONIA UTILITIES

AMMONIA AND UREA PRODUCTION, KINGISEPP

3000 MTPD AMMONIA

TECNIMONT IDENTIFICATION CODE	
Document Number	Revision
4124-JK-DD-217000010	03
Sheet 132 next 134	
Sh.Rev. 02	
CUSTOMER IDENTIFICATION CODE	
-	03

INPUT

Logic Status	TAG
0= NORMAL 1= TRIP	17-XST-M032-COR DCS SDI ESD
0= NOT RUNNING 1= RUNNING	17-XS -M032 -C MCC DI
0= NOT AVLB 1= AVAILABLE	17-XSA -M032 -C MCC DI
0= LOCAL 1= REMOTE	17-XSR -M032 -C MCC DI
0= 1=	
0= 1=	
0= 1=	
0= 1=	
0= 1=	
0= 1=	17-LT -03001 Field AI
0= 1=	
0= 1=	
0= 1=	
0= 1=	

DCS SOFTWARE

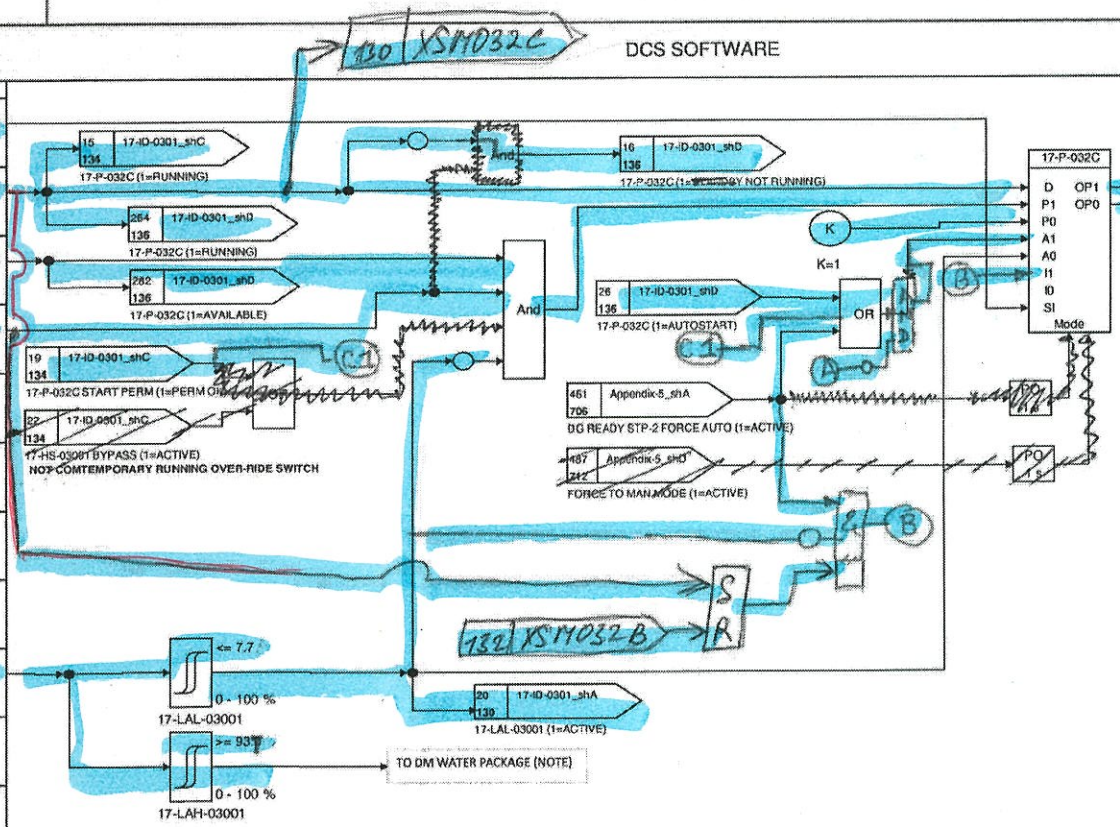

OUTPUT

TAG	Logic Status
	0= 1=
17-XYST -M032 -C MCC DO	0= NO ACTION 1= START
17-XYSP -M032 -C MCC DO	0= STOP 1= NO ACTION
	0= 1=
	0= 1=
	0= 1=
	0= 1=
	0= 1=
	0= 1=
	0= 1=
	0= 1=
	0= 1=
	0= 1=

Motor is set to Auto using M1 input pin (2 sec pulse) of motor block

NOTE

PERMISSIVE TO START OF 3rd DEMI WATER PUMP SHALL BE OVER-RIDED TO SUPPLY DEMI WATER TO UREA PLANT FOR RE-STARTING OF THE PLANT AFTER A SHUT-DOWN (3 PUMPS CONTEMPORARY RUNNING FOR THIS SCENARIO

24/3/22 SE 25.03.22 25.05.22 21.02.25 TKC 21.02.25 21.02.25

EUROCHEM	17-ID-0301_shC DEMI WATER PUMPS DCS LOGIC DIAGRAMS-AMMONIA UTILITIES AMMONIA AND UREA PRODUCTION, KINGISEPP	TECNIMONT IDENTIFICATION CODE Document Number 4124-JK-DD-217000010 Revision 03 Sheet 134 next 136 Sh.Rev. 01 CUSTOMER IDENTIFICATION CODE - 03
Tecnimont	3000 MTPD AMMONIA	

DCS SOFTWARE

INPUT

Logic Status	TAG
0= 1=	
0= 1=	
0= 1=	
0= 1=	
0= 1=	
0= 1=	
0= 1=	
0= 1=	
0= 1=	
0= 1= NOT ACTIVE BYPASS ACTIVE	17-HS -03001 DCS SOFT
0= 1=	
0= 1=	
0= 1=	

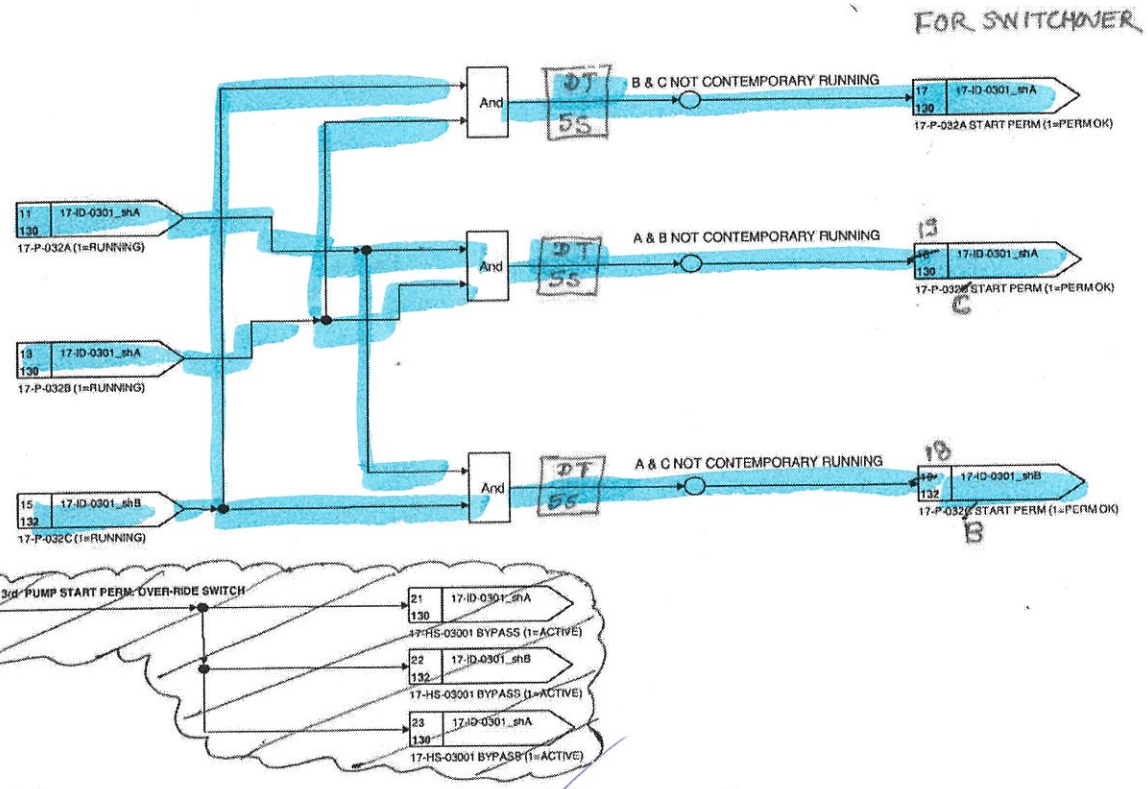

Note
Bypass for for "Non- Contemporary running Permissive condition" is to be enabled by operator only if Demi water export to Urea plant is allowed
ie. Contemmporary running of all three pumps is allowed.

OUTPUT

TAG	Logic Status
	0= 1=
	0= 1=
	0= 1=
	0= 1=
	0= 1=
	0= 1=
	0= 1=
	0= 1=
	0= 1=
	0= 1=
	0= 1=
	0= 1=
	0= 1=
	0= 1=

21.01.25 RKC 21.02.25 21.02.25

EUROCHEM

Tecnimont

17-ID-0301_shD DEMI WATER PUMPS

DCS LOGIC DIAGRAMS-AMMONIA UTILITIES

AMMONIA AND UREA PRODUCTION, KINGISEPP

3000 MTPD AMMONIA

TECNIMONT IDENTIFICATION CODE	
Document Number	Revision
4124-JK-DD-217000010	03
Sheet 136 next 140	
Sh.Rev. 02	
CUSTOMER IDENTIFICATION CODE	
-	03

INPUT — DCS SOFTWARE — OUTPUT

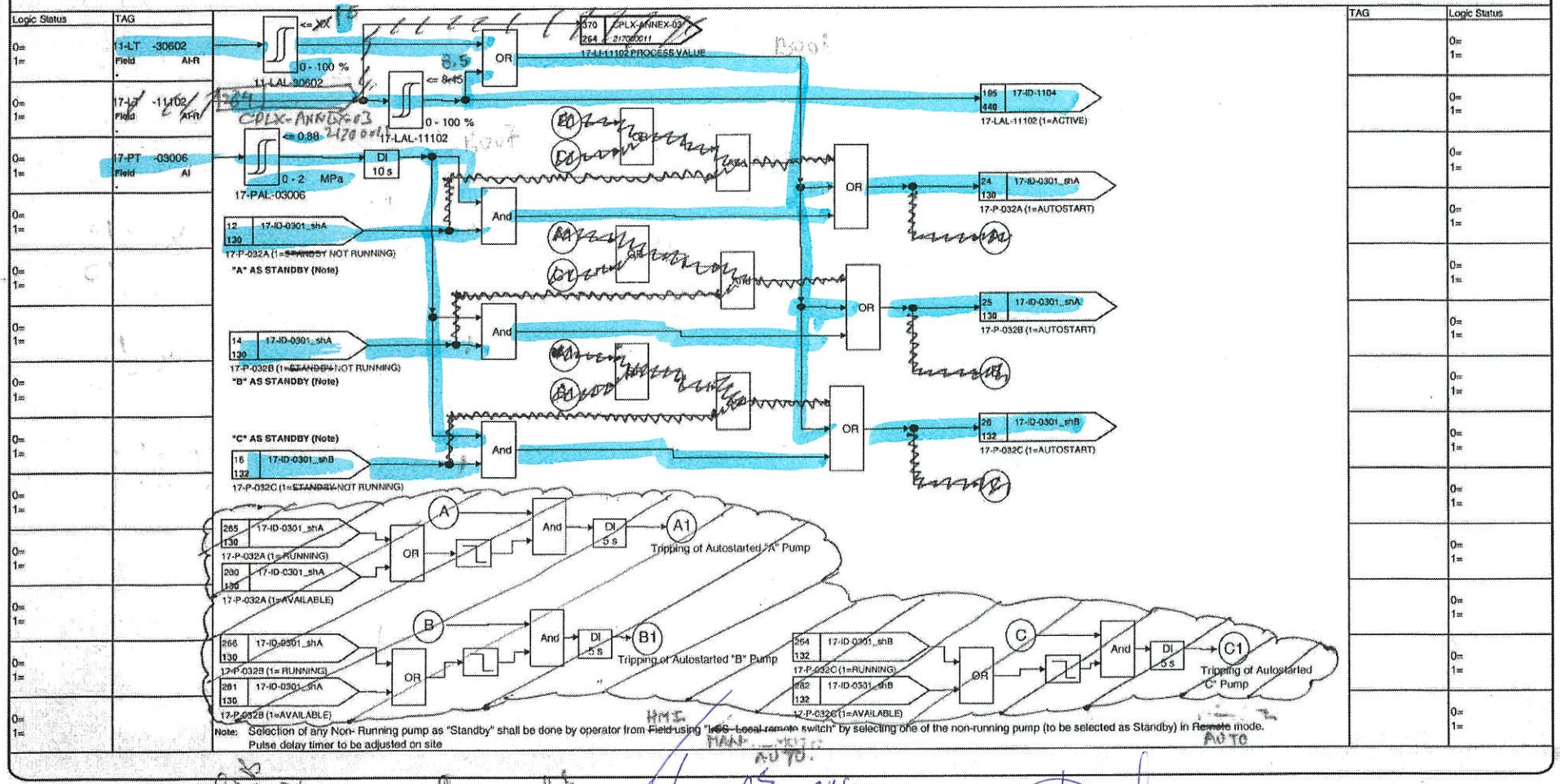

HMI MAN AUTO

AUTO

21.02.25

21.02.25

21.02.25

EUROCHEM

Tecnimont

17-ID-0302_shA MIXED BED FEED PUMPS START / STOP

DCS LOGIC DIAGRAMS-AMMONIA UTILITIES

AMMONIA AND UREA PRODUCTION, KINGISEPP

3000 MTPD AMMONIA

TECNIMONT IDENTIFICATION CODE	
Document Number	Revision
4124-JK-DD-217000010	03
Sheet 140 next 142	
Sh.Rev. 02	
CUSTOMER IDENTIFICATION CODE	
-	03

INPUT

Logic Status	TAG
0= 1=	
0= NOT RUNNING 1= RUNNING	17-XS -M031 -A MCC DI -
0= NOT AVLB 1= AVAILABLE	17-XSA -M031 -A MCC DI -
0= LOCAL 1= REMOTE	17-XSR -M031 -A MCC DI -
0= NORMAL 1= TRIP	17-XST-M031-AOR DCS SDI ESD
0= 1=	17-LT -03042 Field AI -
0= 1=	
0= NOT RUNNING 1= RUNNING	17-XS -M031 -B MCC DI -
0= NOT AVLB 1= AVAILABLE	17-XSA -M031 -B MCC DI -
0= LOCAL 1= REMOTE	17-XSR -M031 -B MCC DI -
0= NORMAL 1= TRIP	17-XST-M031-BOR DCS SDI ESD
0= 1=	
0= 1=	

DCS SOFTWARE

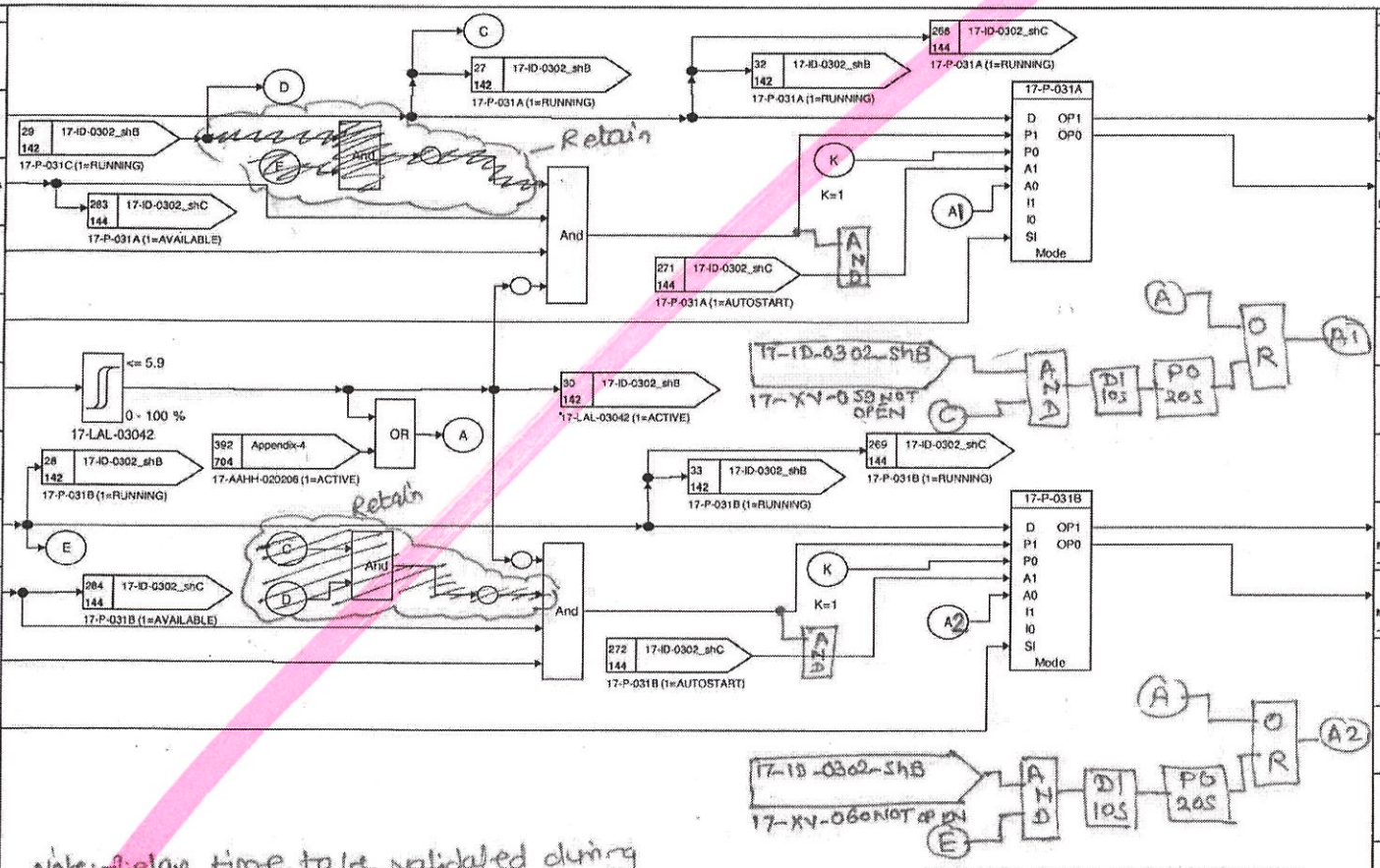

Note: below time to be validated during commissioning on site

OUTPUT

TAG	Logic Status
	0= 1=
17-XYST-M031-A MCC DO -	0= NO ACTION 1= START
17-XYSP-M031-A MCC DO -	0= STOP 1= NO ACTION
	0= 1=
	0= 1=
	0= 1=
	0= 1=
17-XYST-M031-B MCC DO -	0= NO ACTION 1= START
17-XYSP-M031-B MCC DO -	0= STOP 1= NO ACTION
	0= 1=
	0= 1=
	0= 1=
	0= 1=

21.02.25 PKC 21.02.25 21.02.25 Eshake 26/3/25 25.05.22 25.02.25

EUROCHEM

Tecnimont

17-ID-0302_shB MIXED BED FEED PUMPS START / STOP

DCS LOGIC DIAGRAMS-AMMONIA UTILITIES

AMMONIA AND UREA PRODUCTION, KINGISEPP

3000 MTPD AMMONIA

TECNIMONT IDENTIFICATION CODE	
Document Number	Revision
4124-JK-DD-217000010	03
Sheet 142 next 144	
Sh.Rev. 02	
CUSTOMER IDENTIFICATION CODE	
-	03

INPUT

Logic Status	TAG
0= NOT RUNNING 1= RUNNING	17-XS -M031 -C MCC DI -
0= NOT AVLB 1= AVAILABLE	17-XSA -M031 -C MCC DI -
0= LOCAL 1= REMOTE	17-XSR -M031 -C MCC DI -
0= NORMAL 1= TRIP	17-XST-M031-COR DCS SDI ESD
0= NOT OPEN 1= OPEN	17-XZSH -03061 Field DI -
0= NOT CLOSED 1= CLOSED	17-XZSL -03061 Field DI -
0= 1=	
0= NOT OPEN 1= OPEN	17-XZSH -03059 Field DI -
0= NOT CLOSED 1= CLOSED	17-XZSL -03059 Field DI -
0= 1=	
0= NOT OPEN 1= OPEN	17-XZSH -03060 Field DI -
0= NOT CLOSED 1= CLOSED	17-XZSL -03060 Field DI -
0= 1=	

DCS SOFTWARE

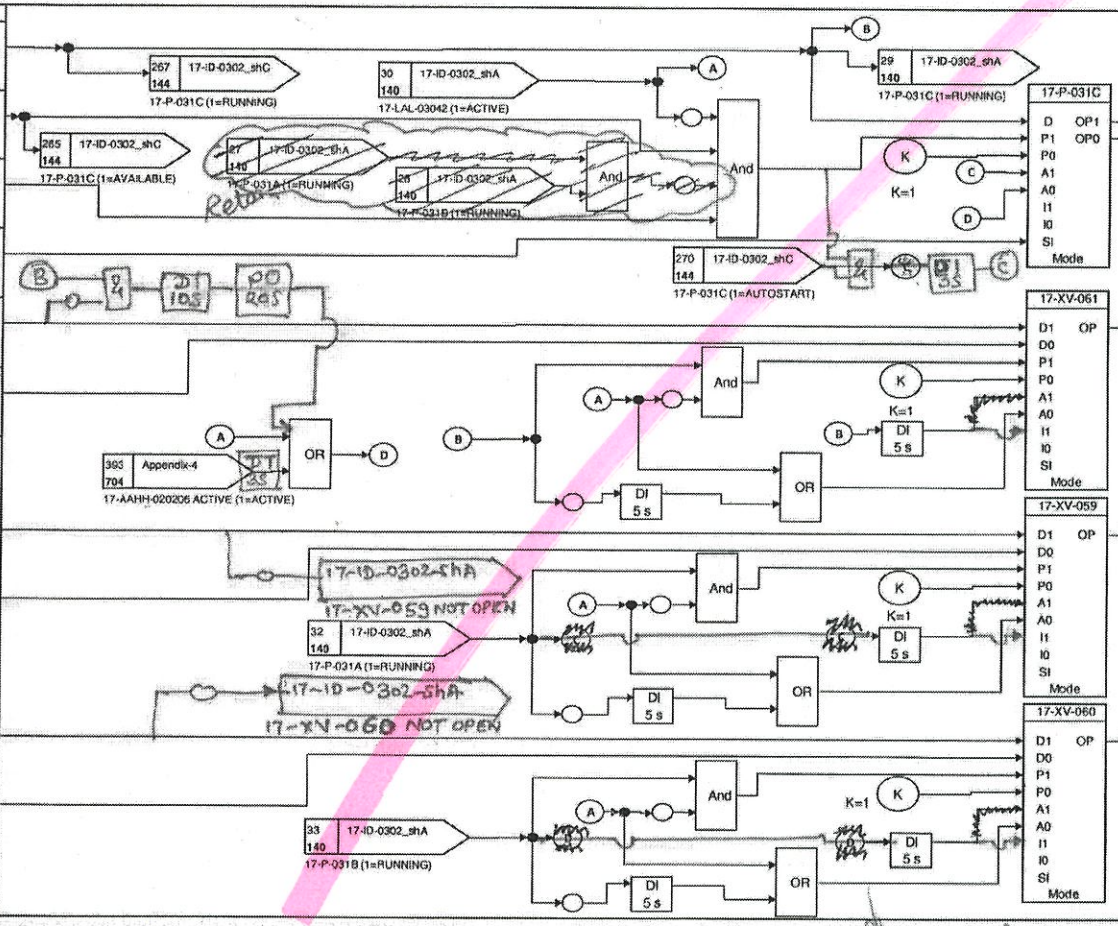

OUTPUT

TAG	Logic Status
	0= 1=
17-XYST-M031-C MCC DO -	0= NO ACTION 1= START
17-XYSP-M031-C MCC DO -	0= STOP 1= NO ACTION
	0= 1=
17-XY -03061 Field DO -	0= OPEN 1= CLOSE
	0= 1=
	0= 1=
17-XY -03059 Field DO -	0= OPEN 1= CLOSE
	0= 1=
	0= 1=
17-XY -03060 Field DO -	0= OPEN 1= CLOSE
	0= 1=
	0= 1=

01.02.25 PLC 21.02.25 21.02.25 16/3/24 SE 25.05.22 EMM-2 25.05.22

EUROCHEM	17-ID-0302_shC MIXED BED FEED PUMPS START / STOP DCS LOGIC DIAGRAMS-AMMONIA UTILITIES AMMONIA AND UREA PRODUCTION, KINGISEPP	TECNIMONT IDENTIFICATION CODE Document Number 4124-JK-DD-217000010 Revision 03 Sheet 144 next 150 Sh.Rev. 01
Tecnimont	3000 MTPD AMMONIA	CUSTOMER IDENTIFICATION CODE 03

INPUT — DCS SOFTWARE — OUTPUT

Logic Status	TAG
0= 1=	
0= 1=	
0= 1=	
0= 1=	
0= 1=	
0= 1=	
0= 1=	
0= 1=	
0= 1=	
0= 1=	
0= 1=	
0= 1=	
0= 1=	
0= 1=	

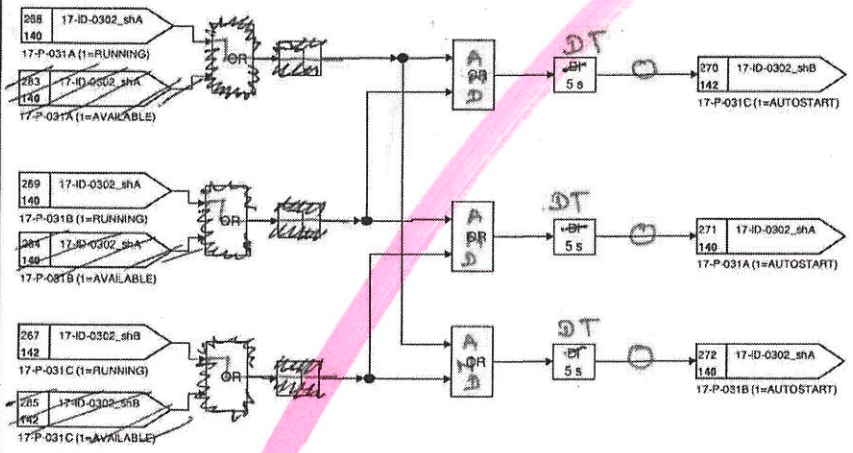

TAG	Logic Status
	0= 1=
	0= 1=
	0= 1=
	0= 1=
	0= 1=
	0= 1=
	0= 1=
	0= 1=
	0= 1=
	0= 1=
	0= 1=
	0= 1=
	0= 1=
	0= 1=

21.02.25 MKC 21.02.25 18/3/24 21.02.25 SE 25.02.25 25-02-25

EUROCHEM

Tecnimont

17-ID-0303_shA LP CONDENSATE PUMPS START / STOP

DCS LOGIC DIAGRAMS-AMMONIA UTILITIES

AMMONIA AND UREA PRODUCTION, KINGISEPP

3000 MTPD AMMONIA

TECNIMONT IDENTIFICATION CODE		
Document Number		Revision
4124-JK-DD-217000010		03
Sheet 150	next 152	
Sh.Rev. 02		
CUSTOMER IDENTIFICATION CODE		
		03

INPUT

Logic Status	TAG
0= 1=	
0= NOT RUNNING 1= RUNNING	17-XS -M020 -A MCC DI
0= NOT AVLB 1= AVAILABLE	17-XSA -M020 -A MCC DI
0= LOCAL 1= REMOTE	17-XSR -M020 -A MCC DI
0= 1=	
0= NORMAL 1= TRIP	17-XST-M020-AOR DCS SDI ESD
0= 1=	
0= NOT RUNNING 1= RUNNING	17-XS -M020 -B MCC DI
0= NOT AVLB 1= AVAILABLE	17-XSA -M020 -B MCC DI
0= LOCAL 1= REMOTE	17-XSR -M020 -B MCC DI
0= 1=	17-LT -03012 Field AI
0= 1=	
0= NORMAL 1= TRIP	17-XST-M020-BOR DCS SDI ESD

DCS SOFTWARE

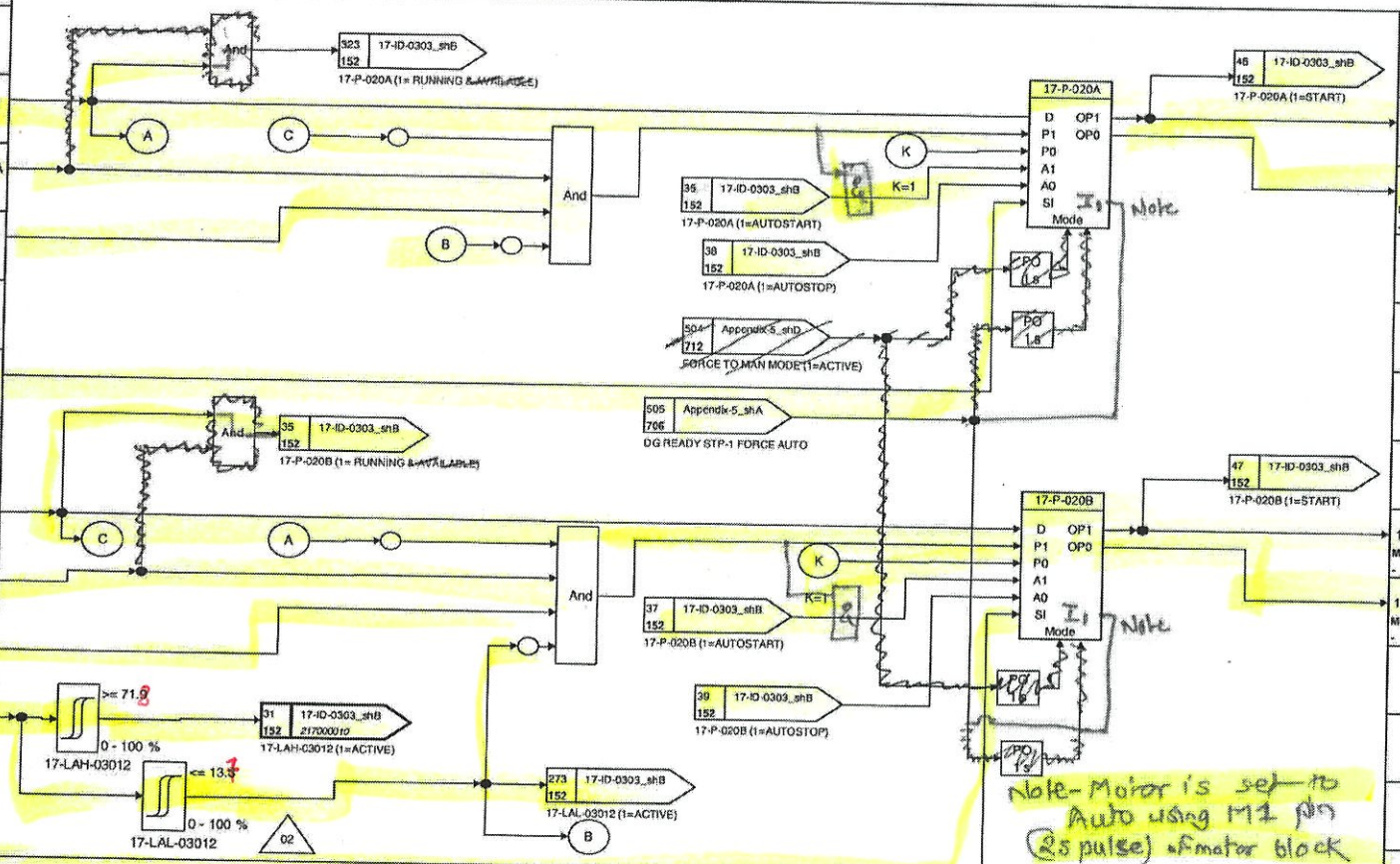

OUTPUT

TAG	Logic Status
	0= 1=
17-XYST -M020 -A MCC DO	0= NO ACTION 1= START
17-XYSP -M020 -A MCC DO	0= STOP 1= NO ACTION
	0= 1=
	0= 1=
	0= 1=
	0= 1=
17-XYST -M020 -B MCC DO	0= NO ACTION 1= START
17-XYSP -M020 -B MCC DO	0= STOP 1= NO ACTION
	0= 1=
	0= 1=
	0= 1=
	0= 1=

21.02.25 FLC 21.02.25 21.02.25 18/2/22

18.02.2022 ENW

EUROCHEM	17-ID-0303_shB LP CONDENSATE PUMPS START / STOP DCS LOGIC DIAGRAMS-AMMONIA UTILITIES AMMONIA AND UREA PRODUCTION, KINGISEPP	TECNIMONT IDENTIFICATION CODE Document Number 4124-JK-DD-217000010 Revision 03 Sheet 152 next 160 Sh.Rev. 02
Tecnimont	3000 MTPD AMMONIA	CUSTOMER IDENTIFICATION CODE - 03

INPUT

Logic Status	TAG
0= 1=	
0= 1=	
0= 1=	
0= 1=	
0= 1=	
0= 1=	
0= 1=	
0= 1=	
0= 1=	
0= 1=	
0= 1=	
0= 1=	
0= 1=	

DCS SOFTWARE

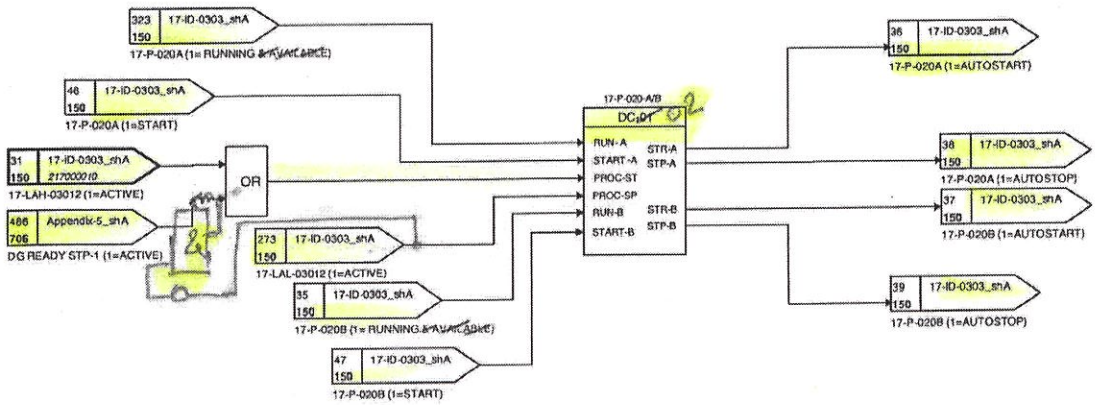

OUTPUT

TAG	Logic Status
	0= 1=
	0= 1=
	0= 1=
	0= 1=
	0= 1=
	0= 1=
	0= 1=
	0= 1=
	0= 1=
	0= 1=
	0= 1=
	0= 1=
	0= 1=

NOTE

DURING START-UP , OPERATOR SHALL ACTIVATE THE FIRST PUMP MANUALLY.
THE ON DELAY TIMER (5 SEC) SHALL BE ADJUSTABLE DURING COMMISSIONING STAGE ON SITE.

21.02.25 MCC 21.02.25 18/02/22 21.02.25 18.02.2022 ENW.

EUROCHEM

Tecnimont

17-ID-0304_shA SAC FILTER FEED PUMPS START / STOP

DCS LOGIC DIAGRAMS-AMMONIA UTILITIES

AMMONIA AND UREA PRODUCTION, KINGISEPP

3000 MTPD AMMONIA

TECNIMONT IDENTIFICATION CODE			
Document Number		Revision	
4124-JK-DD-217000010		03	
Sheet 160	next	162	
Sh.Rev. 01			
CUSTOMER IDENTIFICATION CODE			
-		03	

INPUT

Logic Status	TAG
0= 1=	
0= NOT RUNNING 1= RUNNING	17-XS -M030 -A MCC DI -
0= NOT AVLB 1= AVAILABLE	17-XSA -M030 -A MCC DI -
0= LOCAL 1= REMOTE	17-XSR -M030 -A MCC DI -
0= NORMAL 1= TRIP	17-XST-M030-AOR DCS SDI ESD
0= 1=	
0= 1=	
0= NOT RUNNING 1= RUNNING	17-XS -M030 -B MCC DI -
0= NOT AVLB 1= AVAILABLE	17-XSA -M030 -B MCC DI -
0= LOCAL 1= REMOTE	17-XSR -M030 -B MCC DI -
0= 1=	
0= 1=	17-LT -03021 Field AI -
0= NORMAL 1= TRIP	17-XST-M030-BOR DCS SDI ESD

DCS SOFTWARE

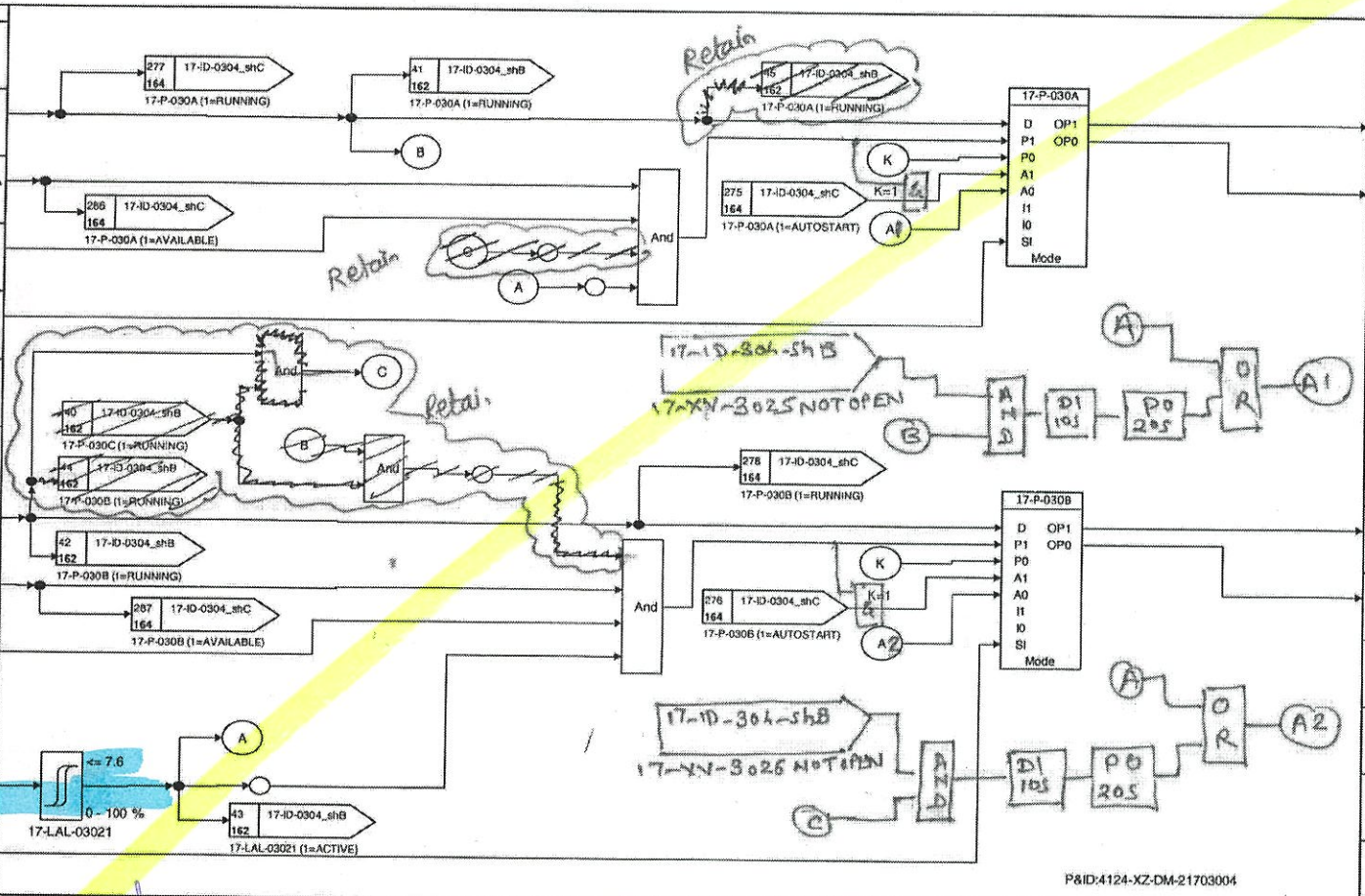

OUTPUT

TAG	Logic Status
	0= 1=
17-XYST -M030 -A MCC DO -	0= NO ACTION 1= START
17-XYSP -M030 -A MCC DO -	0= STOP 1= NO ACTION
	0= 1=
	0= 1=
	0= 1=
	0= 1=
17-XYST -M030 -B MCC DO -	0= NO ACTION 1= START
17-XYSP -M030 -B MCC DO -	0= STOP 1= NO ACTION
	0= 1=
	0= 1=
	0= 1=
	0= 1=

21.02.25 PKC 21.02.25 21.02.25 8/Sahake 06/3/25 S.E. 26.05.22 Released MB ENW/9 TM 26.05.22

EUROCHEM

Tecnimont

17-ID-0304_shB SAC FILTER FEED PUMPS START / STOP

DCS LOGIC DIAGRAMS-AMMONIA UTILITIES

AMMONIA AND UREA PRODUCTION, KINGISEPP

3000 MTPD AMMONIA

TECNIMONT IDENTIFICATION CODE			
Document Number		Revision	
4124-JK-DD-217000010		03	
Sheet	162	next	164
Sh.Rev.	01		
CUSTOMER IDENTIFICATION CODE			
-		03	

INPUT

Logic Status	TAG
0= NOT RUNNING 1= RUNNING	17-XS -M030 -C MCC DI
0= NOT AVLB 1= AVAILABLE	17-XSA -M030 -C MCC DI
0= LOCAL 1= REMOTE	17-XSR -M030 -C MCC DI
0= NORMAL 1= TRIP	17-XST-M030-COR DCS SDI ESD
0= NOT OPEN 1= OPEN	17-XZSH -03027 Field DI
0= NOT CLOSED 1= CLOSED	17-XZSL -03027 Field DI
0= 1=	
0= NOT OPEN 1= OPEN	17-XZSH -03025 Field DI
0= NOT CLOSED 1= CLOSED	17-XZSL -03025 Field DI
0= 1=	
0= NOT OPEN 1= OPEN	17-XZSH -03026 Field DI
0= NOT CLOSED 1= CLOSED	17-XZSL -03026 Field DI
0= 1=	

DCS SOFTWARE

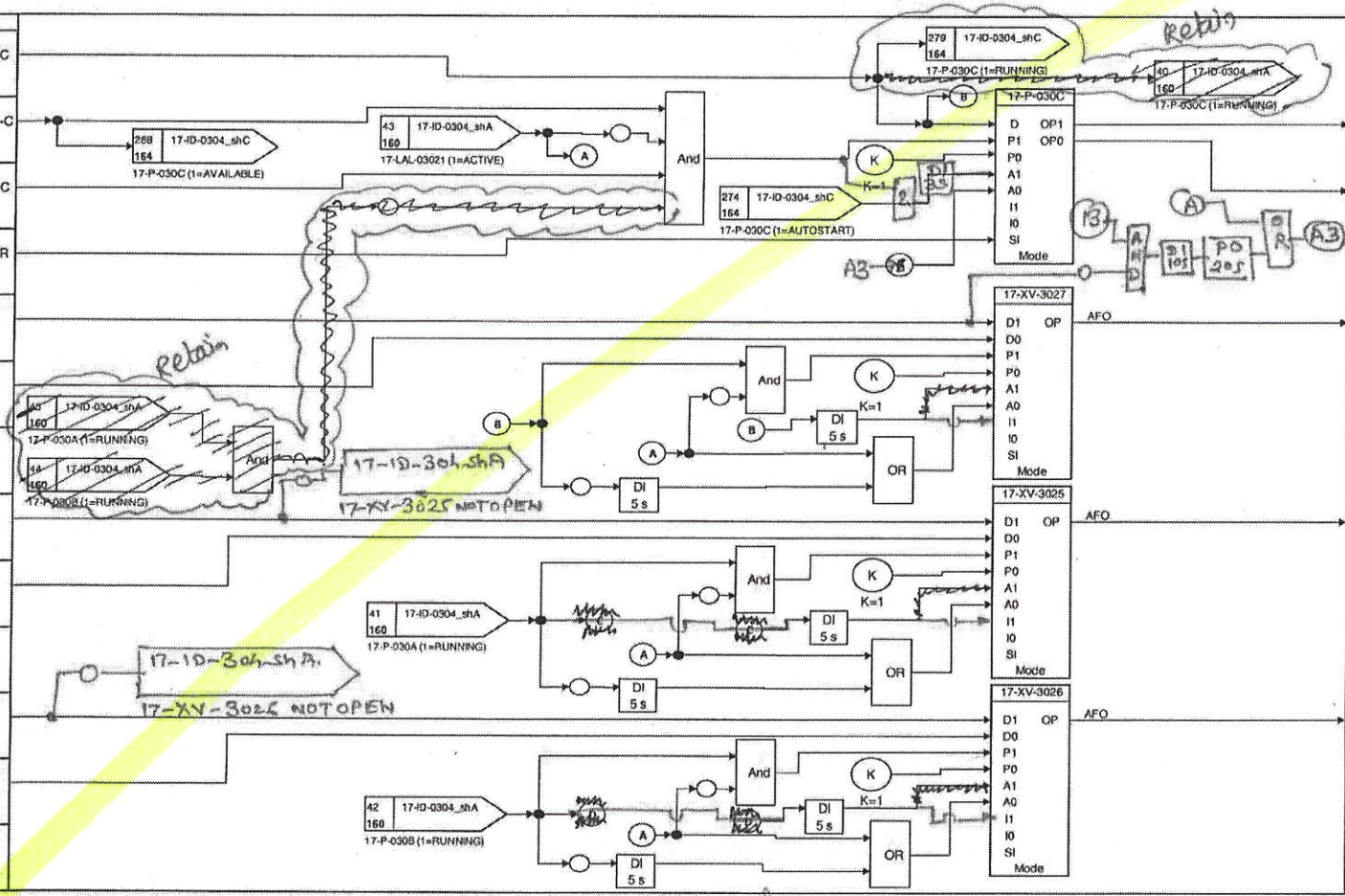

OUTPUT

TAG	Logic Status
	0= 1=
17-XYST -M030 -C MCC DO	0= NO ACTION 1= START
17-XYSP -M030 -C MCC DO	0= STOP 1= NO ACTION
	0= 1=
17-XY -03027 Field DO	0= OPEN 1= CLOSE
	0= 1=
	0= 1=
17-XY -03025 Field DO	0= OPEN 1= CLOSE
	0= 1=
	0= 1=
17-XY -03026 Field DO	0= OPEN 1= CLOSE
	0= 1=
	0= 1=

21.02.25 NKC 21.02.25 21.02.25 16/5/24 S.F. 26.05.22 ENW 26.05.22

EUROCHEM

Tecnimont

17-ID-0304_shC SAC FILTER FEED PUMPS START / STOP

DCS LOGIC DIAGRAMS-AMMONIA UTILITIES

AMMONIA AND UREA PRODUCTION, KINGISEPP

3000 MTPD AMMONIA

TECNIMONT IDENTIFICATION CODE	
Document Number	Revision
4124-JK-DD-217000010	03
Sheet 164 next 170	
Sh.Rev. 01	
CUSTOMER IDENTIFICATION CODE	
-	03

INPUT

Logic Status	TAG
0= 1=	
0= 1=	
0= 1=	
0= 1=	
0= 1=	
0= 1=	
0= 1=	
0= 1=	
0= 1=	
0= 1=	
0= 1=	
0= 1=	
0= 1=	

DCS SOFTWARE

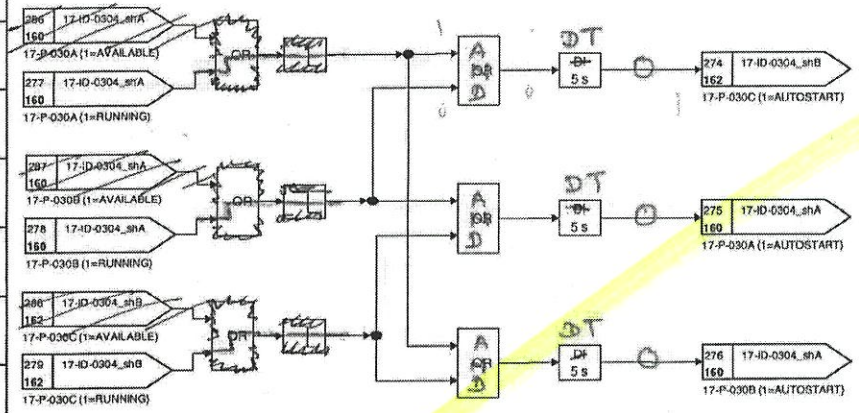

OUTPUT

TAG	Logic Status
	0= 1=
	0= 1=
	0= 1=
	0= 1=
	0= 1=
	0= 1=
	0= 1=
	0= 1=
	0= 1=
	0= 1=
	0= 1=
	0= 1=
	0= 1=

FKC 21.02.25

21.02.25

21.02.25

S.E. 26.05.22

26.05.22

EUROCHEM

Tecnimont

17-ID-0305 SCT FROM NH3 PLANT TO SAC FILTERS

DCS LOGIC DIAGRAMS-AMMONIA UTILITIES

AMMONIA AND UREA PRODUCTION, KINGISEPP

3000 MTPD AMMONIA

TECNIMONT IDENTIFICATION CODE		
Document Number		Revision
4124-JK-DD-217000010		03
Sheet 170	next 180	
Sh.Rev. 01		
CUSTOMER IDENTIFICATION CODE		
-		03

INPUT

Logic Status	TAG
0= 1=	
0= NOT OPEN 1= OPEN	17-XZSH -03023 Field DI -
0= NOT CLOSED 1= CLOSED	17-XZSL -03023 Field DI -
0= 1=	17-AT -03021-CV Field AI -
0= 1=	
0= NOT OPEN 1= OPEN	17-XZSH -03021 Field DI -
0= NOT CLOSED 1= CLOSED	17-XZSL -03021 Field DI -
0= 1=	
0= 1=	
0= 1=	
0= 1=	
0= 1=	
0= 1=	

DCS SOFTWARE

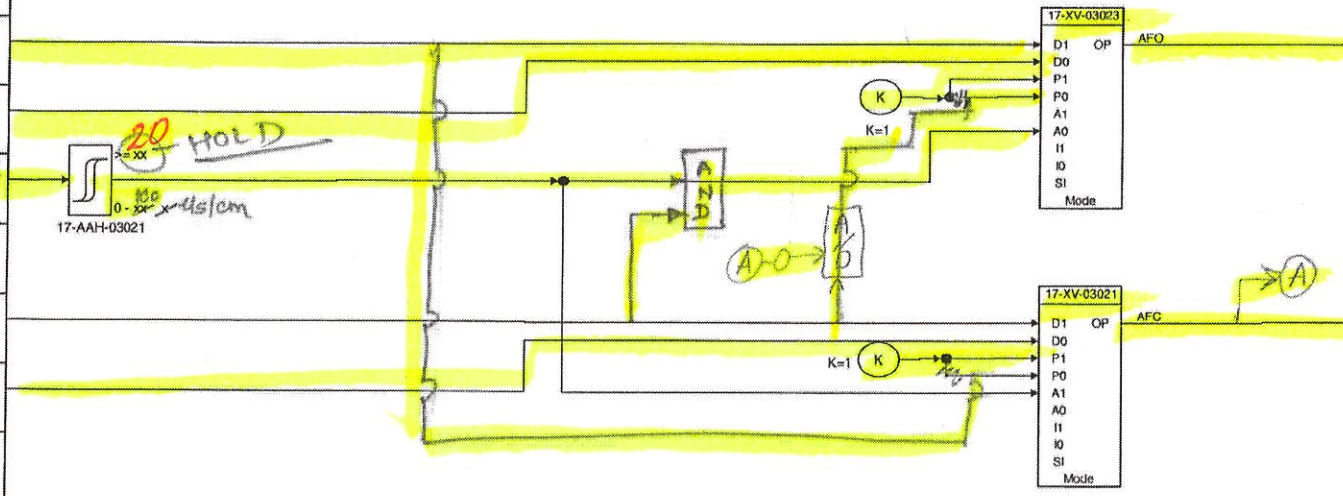

OUTPUT

TAG	Logic Status
	0= 1=
17-XY -03023 Field DO -	0= OPEN 1= CLOSE
	0= 1=
	0= 1=
	0= 1=
17-XY -03021 Field DO -	0= CLOSE 1= OPEN
	0= 1=
	0= 1=
	0= 1=
	0= 1=
	0= 1=
	0= 1=
	0= 1=

NOTE

17-AAH-03021 SHALL BE USED AS INTERLOCK ACTIVATION ALARM.

P&ID:4124-XZ-DM-21703004

07.02.25

TKC 07.02.25

25/2/2022

07.02.2025

25.02.2025

EUROCHEM

Tecnimont

17-ID-0306 SCT FROM CO2 COMPRESSOR TO SAC FILTERS

DCS LOGIC DIAGRAMS-AMMONIA UTILITIES

AMMONIA AND UREA PRODUCTION, KINGISEPP

3000 MTPD AMMONIA

TECNIMONT IDENTIFICATION CODE	
Document Number	Revision
4124-JK-DD-217000010	03
Sheet 180	next 190
Sh.Rev. 01	
CUSTOMER IDENTIFICATION CODE	
-	03

DCS SOFTWARE

INPUT

Logic Status	TAG
0= 1=	
0= NOT OPEN 1= OPEN	17-XZSH -03022 Field DI -
0= NOT CLOSED 1= CLOSED	17-XZSL -03022 Field DI -
0= 1=	
0= 1=	17-AT -03022 Field AI -
0= 1=	
0= NOT OPEN 1= OPEN	17-XZSH -03024 Field DI -
0= NOT CLOSED 1= CLOSED	17-XZSL -03024 Field DI -
0= 1=	
0= 1=	
0= 1=	
0= 1=	
0= 1=	
0= 1=	

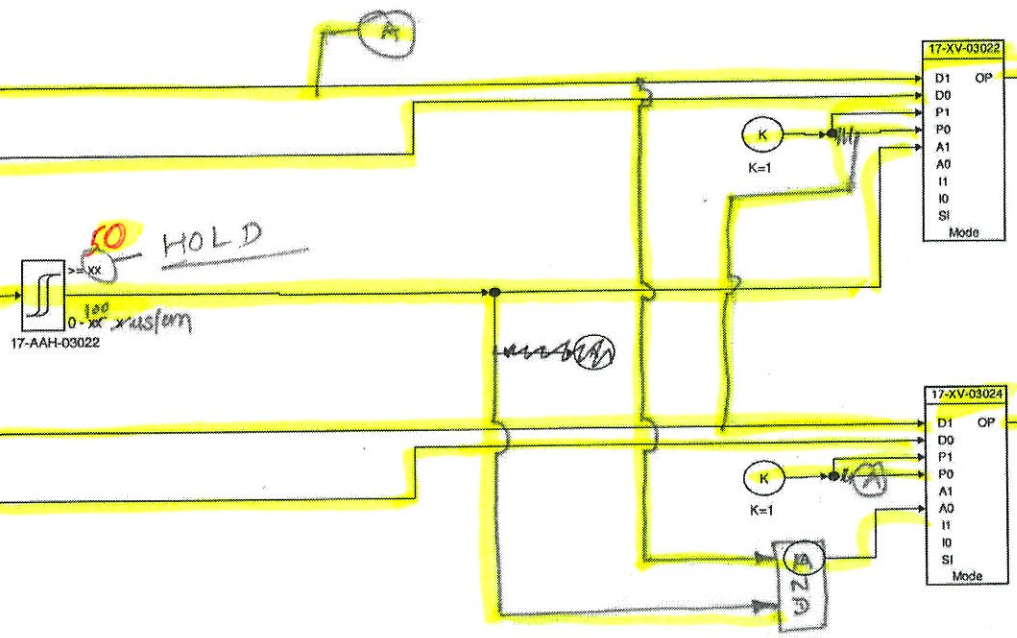

OUTPUT

TAG	Logic Status
	0= 1=
17-XY -03022 Field DO -	0= CLOSE 1= OPEN
	0= 1=
	0= 1=
	0= 1=
	0= 1=
17-XY -03024 Field DO -	0= OPEN 1= CLOSE
	0= 1=
	0= 1=
	0= 1=
	0= 1=
	0= 1=
	0= 1=

NOTE
17-AAH-03022 SHALL BE USED AS INTERLOCK ACTIVATION ALARM.

P&ID:4124-XZ-DM-21703004

07.02.25 NKC 07.02.25 07.02.25 25/2/2022 25.02.2022

EUROCHEM

Tecnimont

17-ID-0307 STEAM COND FROM UREA MELT PLANT TO SAC FLTR

DCS LOGIC DIAGRAMS-AMMONIA UTILITIES

AMMONIA AND UREA PRODUCTION, KINGISEPP

3000 MTPD AMMONIA

TECNIMONT IDENTIFICATION CODE	
Document Number	Revision
4124-JK-DD-217000010	03
Sheet 190 next 200	
Sh.Rev. 01	
CUSTOMER IDENTIFICATION CODE	
-	03

DCS SOFTWARE

INPUT

Logic Status	TAG
0= 1=	
0= NOT OPEN 1= OPEN	17-XZSH -03071 Field DI -
0= NOT CLOSED 1= CLOSED	17-XZSL -03071 Field DI -
0= 1=	
0= 1=	17-AT -03020 - Field AI -
0= 1=	
0= NOT OPEN 1= OPEN	17-XZSH -03072 Field DI -
0= NOT CLOSED 1= CLOSED	17-XZSL -03072 Field DI -
0= 1=	
0= 1=	
0= 1=	
0= 1=	
0= 1=	

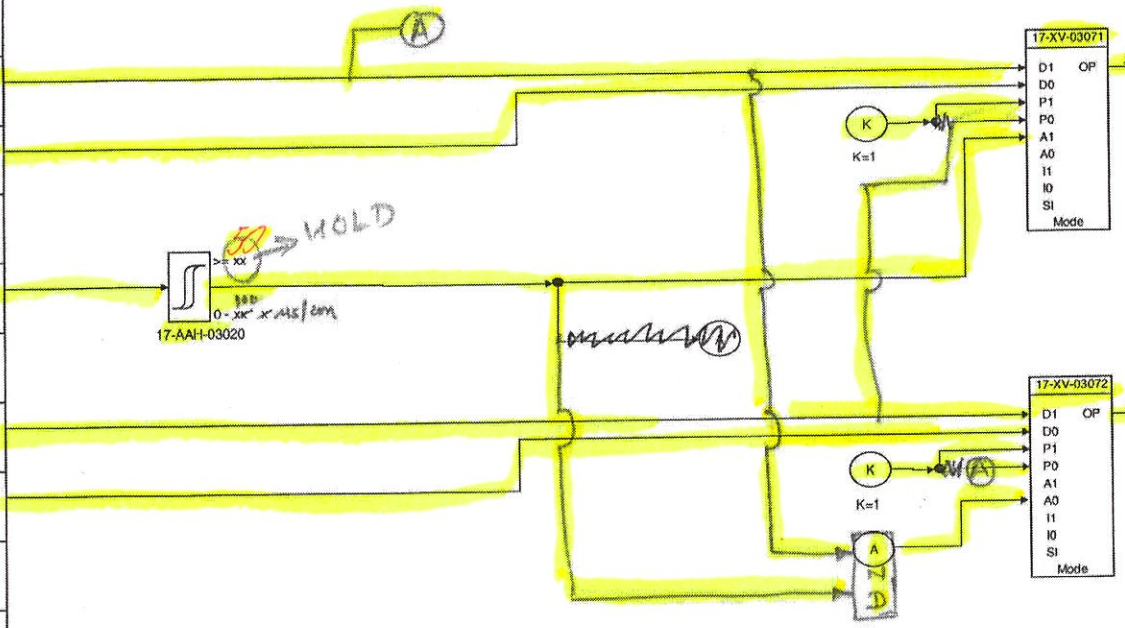

OUTPUT

TAG	Logic Status
	0= 1=
17-XY -03071 Field DO -	0= CLOSE 1= OPEN
	0= 1=
	0= 1=
	0= 1=
	0= 1=
17-XY -03072 Field DO -	0= OPEN 1= CLOSE
	0= 1=
	0= 1=
	0= 1=
	0= 1=
	0= 1=
	0= 1=

NOTE
17-AAH-03020 SHALL BE USED AS INTERLOCK ACTIVATION ALARM.

P&ID:4124-XZ-DM-21703004

07.02.25

25.02.2022

07.02.25

EUROCHEM	17-ID-0702_shA1 COOLING WATER CIRCULATION PUMPS DCS LOGIC DIAGRAMS-AMMONIA UTILITIES AMMONIA AND UREA PRODUCTION, KINGISEPP	TECNIMONT IDENTIFICATION CODE Document Number 4124-JK-DD-217000010 Revision 03 Sheet 200 next 202 Sh.Rev. 01
Tecnimont	3000 MTPD AMMONIA	CUSTOMER IDENTIFICATION CODE 03

INPUT

Logic Status	TAG
0= 1=	
0= NOT RUNNING 1= RUNNING	17-XS -M071 -A MCC DI
0= LOCAL 1= REMOTE	17-XSR -M071 -A MCC DI
0= NOT AVLB 1= AVAILABLE	17-XSA -M071 -A MCC DI
0= 1=	
0= NORMAL 1= TRIP	17-XST-M071-AOR DCS SDI ESD
0= NOT ACTIVE 1= BYPASS ACTIVE	17-HS -07044 DCS -
0= NOT OPEN 1= OPEN	17-MZSH -07035 Field DI
0= NOT CLOSED 1= CLOSED	17-MZSL -07035 Field DI
0= NOT AVLB 1= AVAILABLE	17-MXSA -07035 Field DI
0= LOCAL 1= REMOTE	17-MXSR -07035 Field DI
0= 1=	
0= 1=	

DCS SOFTWARE

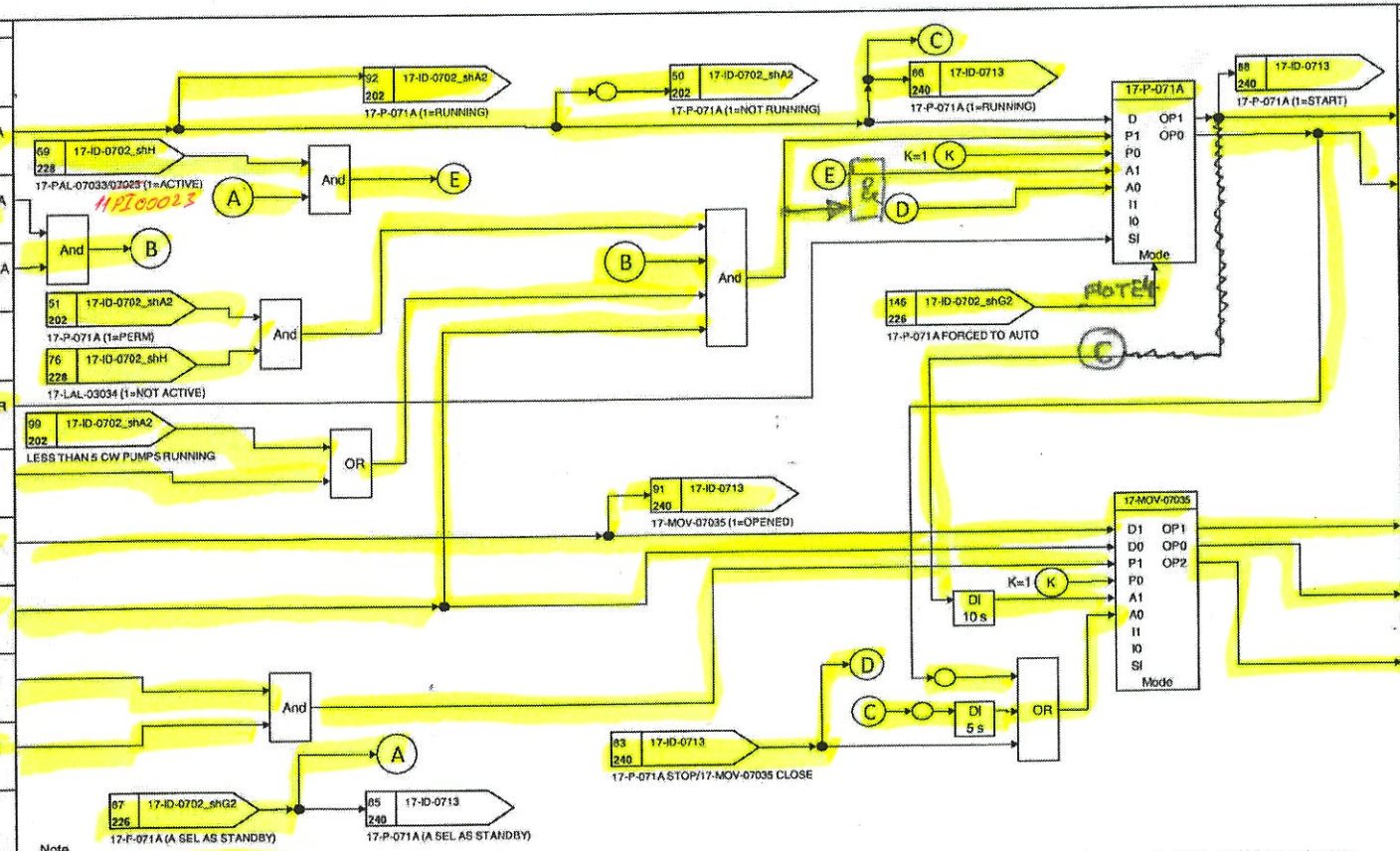

OUTPUT

TAG	Logic Status
	0= 1=
17-XYST -M071 -A MCC DO	0= NO ACTION 1= START
17-XYSP -M071 -A MCC DO	0= STOP 1= NO ACTION
	0= 1=
	0= 1=
	0= 1=
	0= 1=
17-MXYH -07035 Field DO	0= NO ACTION 1= OPEN
17-MXYSP -07035 Field DO	0= NO ACTION 1= STOP
17-MXYL -07035 Field DO	0= NO ACTION 1= CLOSE
	0= 1=
	0= 1=
	0= 1=

Note
1) DELAY TIME SHALL BE ADJUSTABLE
2) DURING START-UP MAIN FIVE PUMPS WILL BE STARTED MANUALLY BY OPERATOR
3) EVEN IF OVER-RIDE SWITCH IS PROVIDED TO BY-PASS CONTEMPORARY RUNNING PERMISSIVE IT IS ALWAYS RECOMMENDED TO OPERATE THE PLANT WITH 5 MAIN COOLING WATER PUMPS RUNNING AND 2 COOLING WATER PUMPS IN STAND-BY MODE).
4) motor is set to Auto using M1 input pin C 2 sec pulse in motor block.

P&ID:4124-XZ-DM-21707003/4124-XZ-DM-21707007

04.02.25
04.02.25
TKC 04.02.25
5/2/22
9/2/22
16.02.2022
Eurochem

EuroChem

Tecnimont

17-ID-0702_shA2 COOLING WATER CIRCULATION PUMPS

DCS LOGIC DIAGRAMS-AMMONIA UTILITIES

AMMONIA AND UREA PRODUCTION, KINGISEPP

3000 MTPD AMMONIA

TECNIMONT IDENTIFICATION CODE			
Document Number		Revision	
4124-JK-DD-217000010		03	
Sheet	202	next	204
Sh.Rev.	01		
CUSTOMER IDENTIFICATION CODE			
			03

INPUT

Logic Status	TAG
0= 1=	
0= 1=	
0= 1=	
0= 1=	
0= 1=	
0= 1=	
0= 1=	
0= 1=	
0= 1=	
0= 1=	
0= 1=	
0= 1=	

DCS SOFTWARE

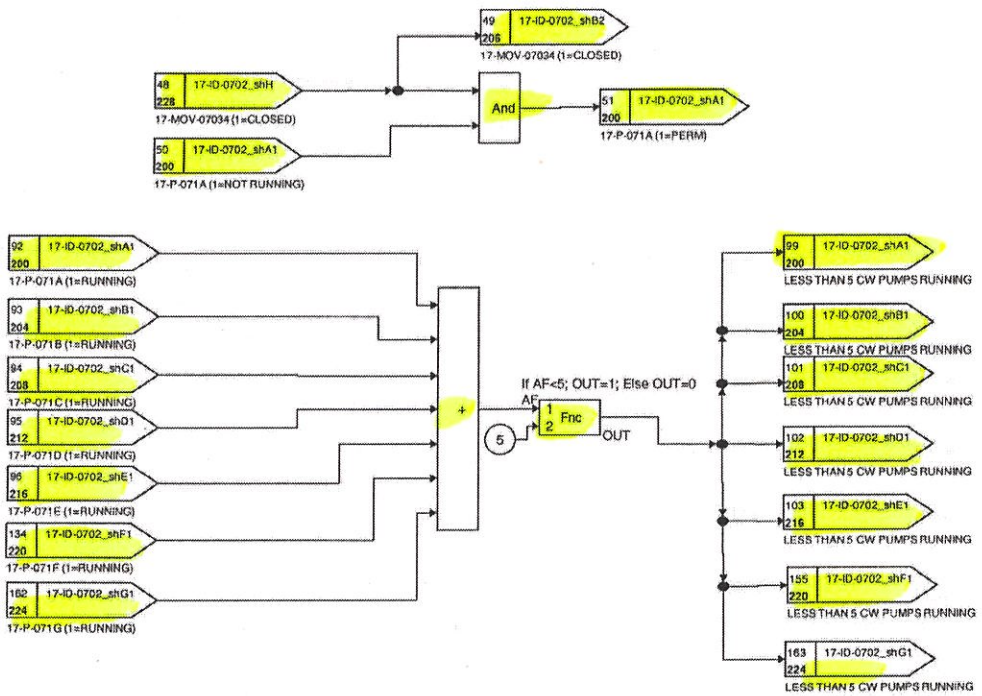

OUTPUT

TAG	Logic Status
	0= 1=
	0= 1=
	0= 1=
	0= 1=
	0= 1=
	0= 1=
	0= 1=
	0= 1=
	0= 1=
	0= 1=
	0= 1=
	0= 1=

04.02.25 ГКС 04.02.25 04.02.25 9/2/22 18.02.2022 Eurochem

EUROCHEM

Tecnimont

17-ID-0702_shB1 COOLING WATER CIRCULATION PUMPS

DCS LOGIC DIAGRAMS-AMMONIA UTILITIES

AMMONIA AND UREA PRODUCTION, KINGISEPP

3000 MTPD AMMONIA

TECNIMONT IDENTIFICATION CODE	
Document Number	Revision
4124-JK-DD-217000010	03
Sheet 204 next 206	
Sh.Rev. 01	
CUSTOMER IDENTIFICATION CODE	
-	03

INPUT

Logic Status	TAG
0= 1=	
0= NOT RUNNING 1= RUNNING	17-XS -M071 -B MCC DI -
0= LOCAL 1= REMOTE	17-XSR -M071 -B MCC DI -
0= NOT AVLB 1= AVAILABLE	17-XSA -M071 -B MCC DI -
0= 1=	
0= NORMAL 1= TRIP	17-XST-M071-BOR DCS SDI ESD
0= NOT ACTIVE 1= BYPASS ACTIVE	17-HS -07045 DCS - -
0= NOT OPEN 1= OPEN	17-MZSH -07036 Field DI -
0= NOT CLOSED 1= CLOSED	17-MZSL -07036 Field DI -
0= NOT AVLB 1= AVAILABLE	17-MXSA -07036 Field DI -
0= LOCAL 1= REMOTE	17-MXSR -07036 Field DI -
0= 1=	
0= 1=	

DCS SOFTWARE

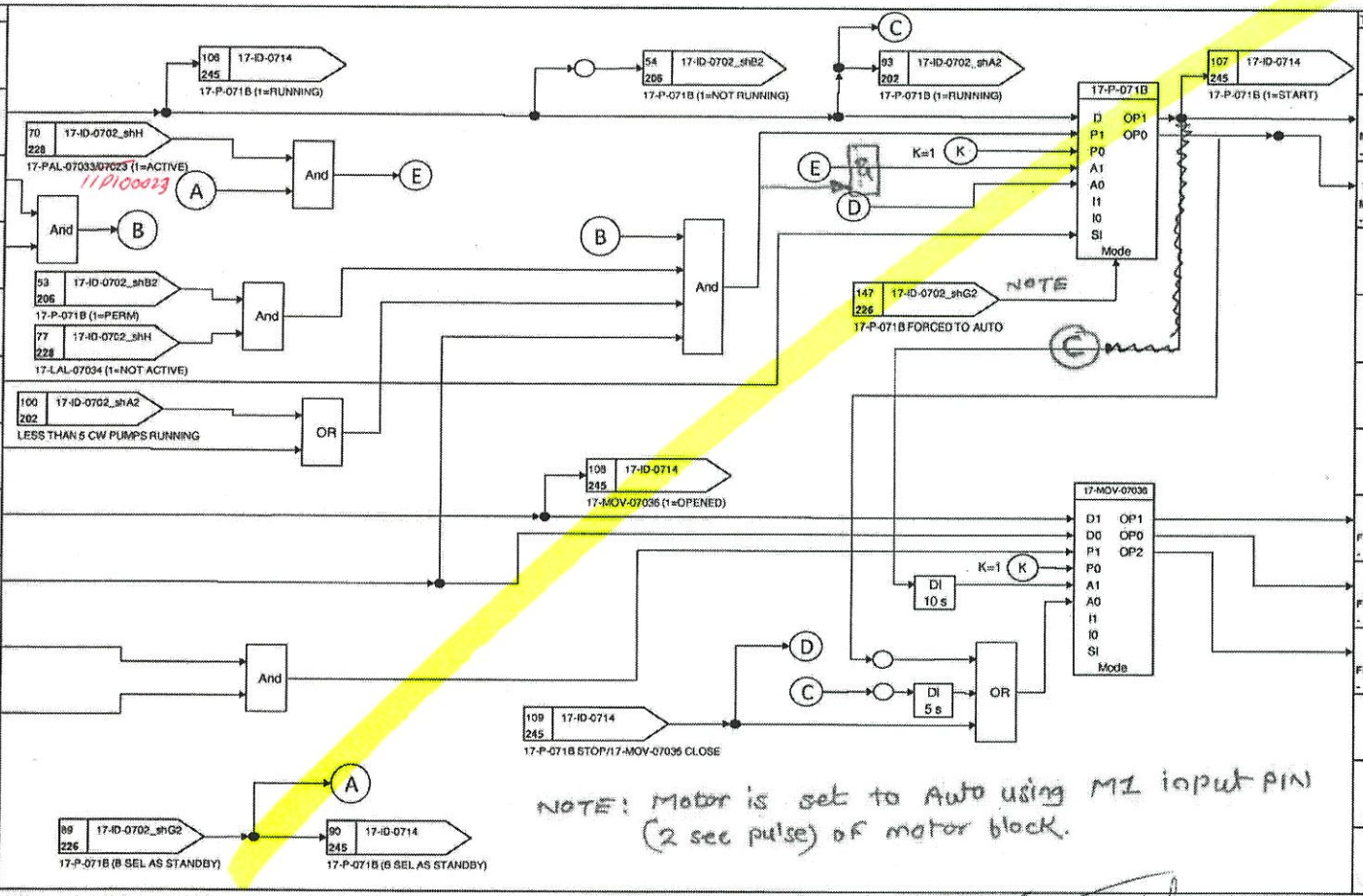

NOTE: Motor is set to Auto using M1 input PIN (2 sec pulse) of motor block.

OUTPUT

TAG	Logic Status
	0= 1=
17-XYST -M071 -B MCC DO -	0= NO ACTION 1= START
17-XYSP -M071 -B MCC DO -	0= STOP 1= NO ACTION
	0= 1=
	0= 1=
	0= 1=
	0= 1=
17-MXYH -07036 Field DO -	0= NO ACTION 1= OPEN
17-MXYSP -07036 Field DO -	0= NO ACTION 1= STOP
17-MXYL -07036 Field DO -	0= NO ACTION 1= CLOSE
	0= 1=
	0= 1=
	0= 1=

04.02.25 TKC 04.02.25 04.02.25 9/2/22 16.02.2022 Eurochem

EUROCHEM

Tecnimont

17-ID-0702_shB2 COOLING WATER CIRCULATION PUMPS

DCS LOGIC DIAGRAMS-AMMONIA UTILITIES

AMMONIA AND UREA PRODUCTION, KINGISEPP

3000 MTPD AMMONIA

TECNIMONT IDENTIFICATION CODE	
Document Number	Revision
4124-JK-DD-217000010	03
Sheet 206 next 208	
Sh.Rev. 01	
CUSTOMER IDENTIFICATION CODE	
-	03

INPUT

Logic Status	TAG
0= 1=	
0= 1=	
0= 1=	
0= 1=	
0= 1=	
0= 1=	
0= 1=	
0= 1=	
0= 1=	
0= 1=	
0= 1=	
0= 1=	
0= 1=	
0= 1=	

DCS SOFTWARE

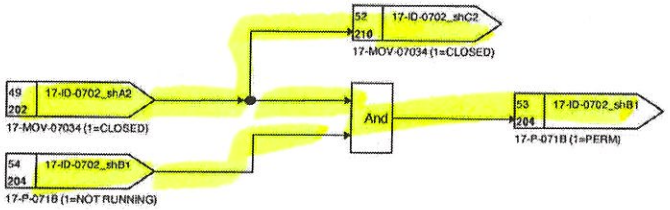

OUTPUT

TAG	Logic Status
	0= 1=
	0= 1=
	0= 1=
	0= 1=
	0= 1=
	0= 1=
	0= 1=
	0= 1=
	0= 1=
	0= 1=
	0= 1=
	0= 1=
	0= 1=
	0= 1=

04.02.25

FKC 04.02.25

04.02.25

9/2/22

16.02.2022

Furmclam

EUROCHEM

Tecnimont

17-ID-0702_shC1 COOLING WATER CIRCULATION PUMPS
DCS LOGIC DIAGRAMS-AMMONIA UTILITIES
AMMONIA AND UREA PRODUCTION, KINGISEPP

3000 MTPD AMMONIA

TECNIMONT IDENTIFICATION CODE		
Document Number		Revision
4124-JK-DD-217000010		03
Sheet 208	next 210	
Sh.Rev. 01		
CUSTOMER IDENTIFICATION CODE		
-		03

INPUT

Logic Status	TAG
0= 1=	
0= NOT RUNNING 1= RUNNING	17-XS -M071 -C MCC DI -
0= LOCAL 1= REMOTE	17-XSR -M071 -C MCC DI -
0= NOT AVLB 1= AVAILABLE	17-XSA -M071 -C MCC DI -
0= 1=	
0= NORMAL 1= TRIP	17-XST-M071-COR DCS SDI ESD
0= NOT ACTIVE 1= BYPASS ACTIVE	17-HS -07046 DCS - -
0= NOT OPEN 1= OPEN	17-MZSH -07037 Field DI -
0= NOT CLOSED 1= CLOSED	17-MZSL -07037 Field DI -
0= NOT AVLB 1= AVAILABLE	17-MXSA -07037 Field DI -
0= LOCAL 1= REMOTE	17-MXSR -07037 Field DI -
0= 1=	
0= 1=	

DCS SOFTWARE

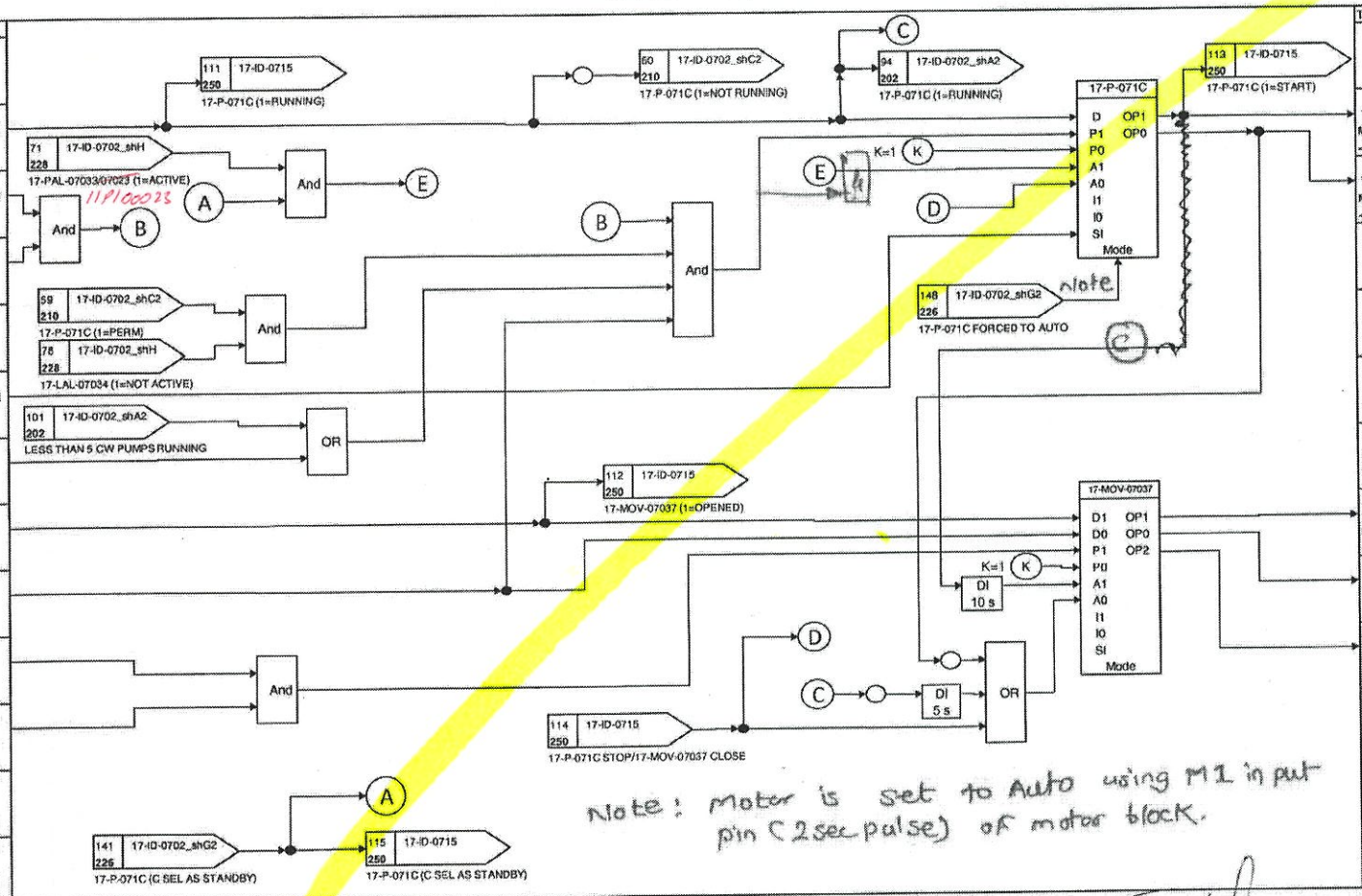

Note: Motor is set to Auto using M1 input pin (2sec pulse) of motor block.

OUTPUT

TAG	Logic Status
	0= 1=
17-XYST -M071 -C MCC DO -	0= NO ACTION 1= START
17-XYSP -M071 -C MCC DO -	0= STOP 1= NO ACTION
	0= 1=
	0= 1=
	0= 1=
	0= 1=
17-MXYH -07037 Field DO -	0= NO ACTION 1= OPEN
17-MXYSP -07037 Field DO -	0= NO ACTION 1= STOP
17-MXYL -07037 Field DO -	0= NO ACTION 1= CLOSE
	0= 1=
	0= 1=
	0= 1=

04.02.25 RKC 04.02.25 04.02.25 9/2/22 16.02.2022 Eurochem

EUROCHEM	17-ID-0702_shC2 COOLING WATER CIRCULATION PUMPS DCS LOGIC DIAGRAMS-AMMONIA UTILITIES AMMONIA AND UREA PRODUCTION, KINGISEPP	TECNIMONT IDENTIFICATION CODE Document Number 4124-JK-DD-217000010 Revision 03 Sheet 210 next 212 Sh.Rev. 01
Tecnimont	3000 MTPD AMMONIA	CUSTOMER IDENTIFICATION CODE - 03

INPUT | DCS SOFTWARE | OUTPUT

Logic Status	TAG
0= 1=	
0= 1=	
0= 1=	
0= 1=	
0= 1=	
0= 1=	
0= 1=	
0= 1=	
0= 1=	
0= 1=	
0= 1=	
0= 1=	
0= 1=	
0= 1=	

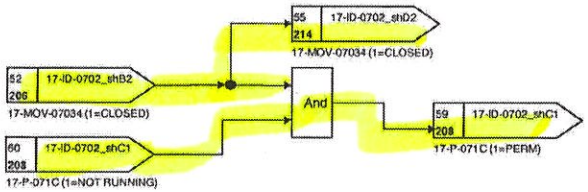

TAG	Logic Status
	0= 1=
	0= 1=
	0= 1=
	0= 1=
	0= 1=
	0= 1=
	0= 1=
	0= 1=
	0= 1=
	0= 1=
	0= 1=
	0= 1=
	0= 1=
	0= 1=

04.02.05 FKC 04.02.25 04.02.25 9/2/22 16.02.2022 Eurochem

EUROCHEM

Tecnimont

17-ID-0702_shD1 COOLING WATER CIRCULATION PUMPS

DCS LOGIC DIAGRAMS-AMMONIA UTILITIES

AMMONIA AND UREA PRODUCTION, KINGISEPP

3000 MTPD AMMONIA

TECNIMONT IDENTIFICATION CODE	
Document Number	Revision
4124-JK-DD-217000010	03
Sheet 212 next 214	
Sh.Rev. 01	
CUSTOMER IDENTIFICATION CODE	
-	03

INPUT

Logic Status	TAG
0= 1=	
0= NOT RUNNING 1= RUNNING	17-XS -M071 -D MCC DI -
0= LOCAL 1= REMOTE	17-XSR -M071 -D MCC DI -
0= NOT AVLB 1= AVAILABLE	17-XSA -M071 -D MCC DI -
0= 1=	
0= NORMAL 1= TRIP	17-XST-M071-DOR DCS SDI ESD
0= NOT ACTIVE 1= BYPASS ACTIVE	17-HS -07047 DCS - -
0= NOT OPEN 1= OPEN	17-MZSH -07038 Field DI -
0= NOT CLOSED 1= CLOSED	17-MZSL -07038 Field DI -
0= NOT AVLB 1= AVAILABLE	17-MXSA -07038 Field DI -
0= LOCAL 1= REMOTE	17-MXSR -07038 Field DI -
0= 1=	
0= 1=	

DCS SOFTWARE

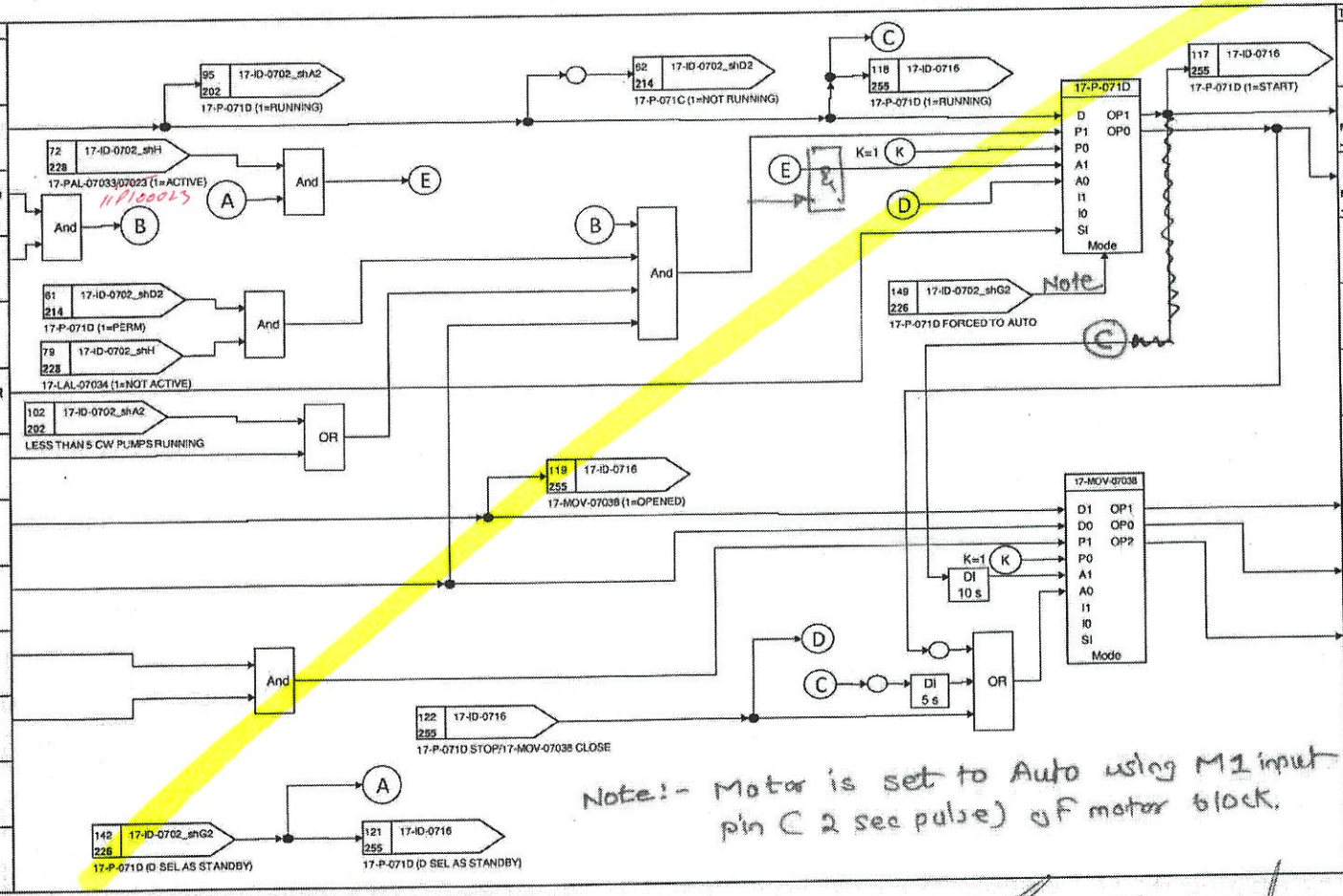

Note:- Motor is set to Auto using M1 input pin C 2 sec pulse) of motor block.

OUTPUT

TAG	Logic Status
	0= 1=
17-XYST -M071 -D MCC DO -	0= NO ACTION 1= START
17-XYSP -M071 -D MCC DO -	0= STOP 1= NO ACTION
	0= 1=
	0= 1=
	0= 1=
	0= 1=
17-MXYH -07038 Field DO -	0= NO ACTION 1= OPEN
17-MXYSP -07038 Field DO -	0= NO ACTION 1= STOP
17-MXYL -07038 Field DO -	0= NO ACTION 1= CLOSE
	0= 1=
	0= 1=
	0= 1=

04.02.25 PKC 04.02.25 04.02.25 9/2/22 6.02.2022 Eurochem

EUROCHEM

Tecnimont

17-ID-0702_shD2 COOLING WATER CIRCULATION PUMPS

DCS LOGIC DIAGRAMS-AMMONIA UTILITIES

AMMONIA AND UREA PRODUCTION, KINGISEPP

3000 MTPD AMMONIA

TECNIMONT IDENTIFICATION CODE	
Document Number	Revision
4124-JK-DD-217000010	03
Sheet 214 next 216	
Sh.Rev. 01	
CUSTOMER IDENTIFICATION CODE	
-	03

INPUT

Logic Status	TAG
0= 1=	
0= 1=	
0= 1=	
0= 1=	
0= 1=	
0= 1=	
0= 1=	
0= 1=	
0= 1=	
0= 1=	
0= 1=	
0= 1=	
0= 1=	
0= 1=	

DCS SOFTWARE

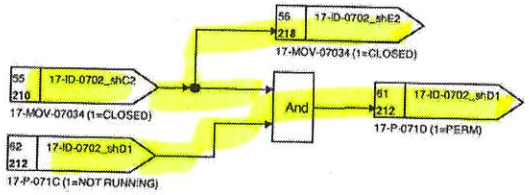

OUTPUT

TAG	Logic Status
	0= 1=
	0= 1=
	0= 1=
	0= 1=
	0= 1=
	0= 1=
	0= 1=
	0= 1=
	0= 1=
	0= 1=
	0= 1=
	0= 1=
	0= 1=
	0= 1=

04.02.25 PKC 04.02.25 04.02.25 5/2/22 16.02.2022 Eurochem

EuroChem

Tecnimont

17-ID-0702_shE1 COOLING WATER CIRCULATION PUMPS

DCS LOGIC DIAGRAMS-AMMONIA UTILITIES

AMMONIA AND UREA PRODUCTION, KINGISEPP

3000 MTPD AMMONIA

TECNIMONT IDENTIFICATION CODE	
Document Number	Revision
4124-JK-DD-217000010	03
Sheet 216	next 218
Sh.Rev. 01	
CUSTOMER IDENTIFICATION CODE	
-	03

INPUT

Logic Status	TAG
0= 1=	
0= NOT RUNNING 1= RUNNING	17-XS -M071 -E MCC DI -
0= LOCAL 1= REMOTE	17-XSR -M071 -E MCC DI -
0= NOT AVLB 1= AVAILABLE	17-XSA -M071 -E MCC DI -
0= 1=	
0= NORMAL 1= TRIP	17-XST-M071-EOR DCS SDI ESD
0= NOT ACTIVE 1= BYPASS ACTIVE	17-HS -07048 DCS - -
0= NOT OPEN 1= OPEN	17-MZSH -07039 Field DI -
0= NOT CLOSED 1= CLOSED	17-MZSL -07039 Field DI -
0= NOT AVLB 1= AVAILABLE	17-MXSA -07039 Field DI -
0= LOCAL 1= REMOTE	17-MXSR -07039 Field DI -
0= 1=	
0= 1=	

DCS SOFTWARE

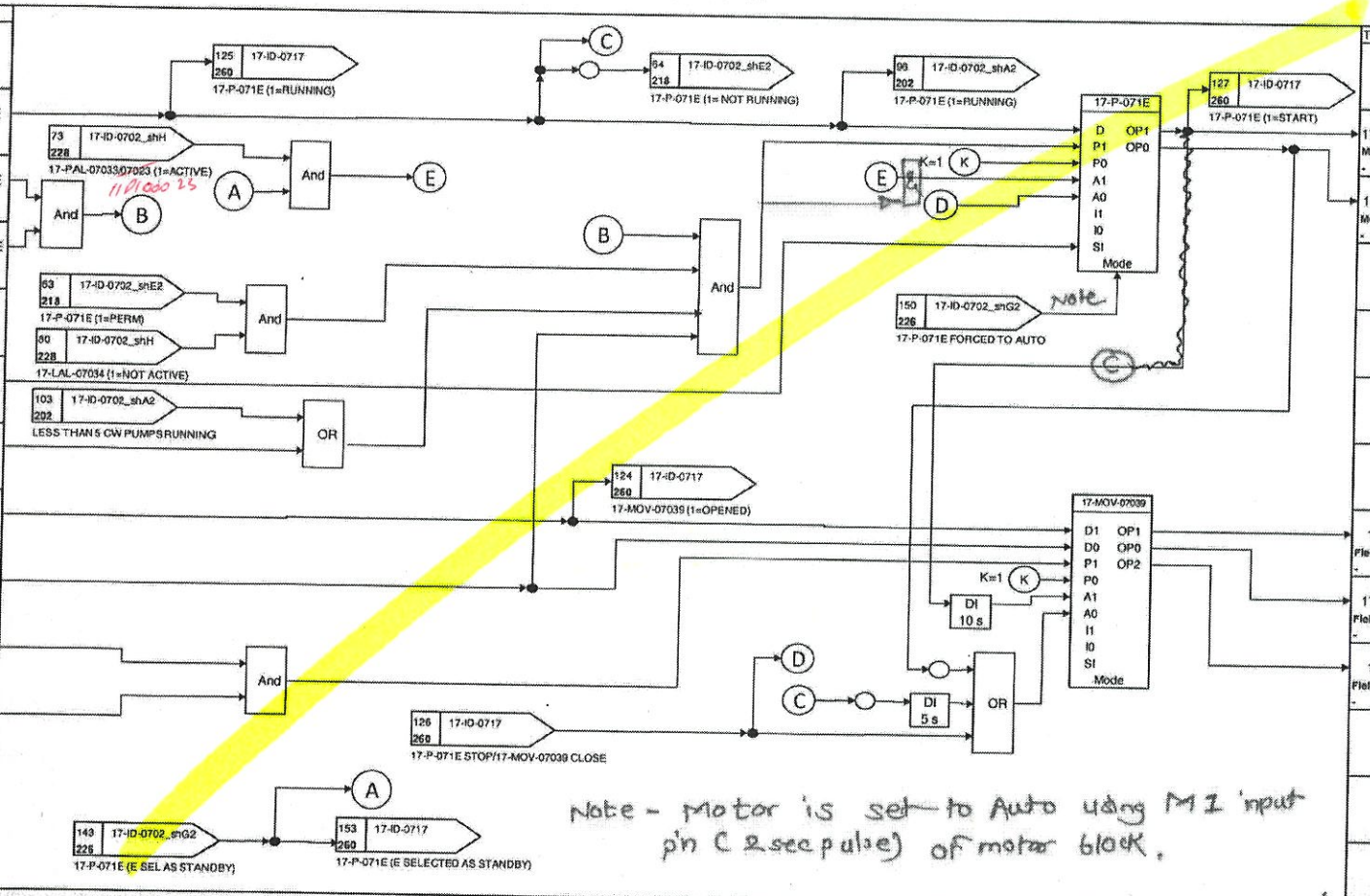

Note - Motor is set to Auto using M1 input pin C 2sec pulse) of motor block.

OUTPUT

TAG	Logic Status
	0= 1=
17-XYST -M071 -E MCC DO -	0= NO ACTION 1= START
17-XYSP -M071 -E MCC DO -	0= STOP 1= NO ACTION
	0= 1=
	0= 1=
	0= 1=
	0= 1=
17-MXYH -07039 Field DO -	0= NO ACTION 1= OPEN
17-MXYSP -07039 Field DO -	0= NO ACTION 1= STOP
17-MXYL -07039 Field DO -	0= NO ACTION 1= CLOSE
	0= 1=
	0= 1=
	0= 1=

04.02.25 RKC 04.02.25 04.02.25 3/2/22. 16.02.2022 Eurochem

EUROCHEM

Tecnimont

17-ID-0702_shE2 COOLING WATER CIRCULATION PUMPS

DCS LOGIC DIAGRAMS-AMMONIA UTILITIES

AMMONIA AND UREA PRODUCTION, KINGISEPP

3000 MTPD AMMONIA

TECNIMONT IDENTIFICATION CODE	
Document Number	Revision
4124-JK-DD-217000010	03
Sheet 218	next 220
Sh.Rev. 01	
CUSTOMER IDENTIFICATION CODE	
-	03

INPUT

Logic Status	TAG
0= 1=	
0= 1=	
0= 1=	
0= 1=	
0= 1=	
0= 1=	
0= 1=	
0= 1=	
0= 1=	
0= 1=	
0= 1=	
0= 1=	
0= 1=	
0= 1=	
0= 1=	

DCS SOFTWARE

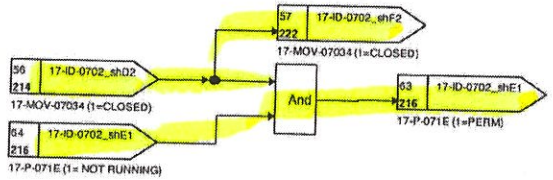

OUTPUT

TAG	Logic Status
	0= 1=
	0= 1=
	0= 1=
	0= 1=
	0= 1=
	0= 1=
	0= 1=
	0= 1=
	0= 1=
	0= 1=
	0= 1=
	0= 1=
	0= 1=
	0= 1=

04.02.25 PKC 04.02.25 04.02.25 9/2/22 16.02.2022 Eurochem

EUROCHEM

Tecnimont

17-ID-0702_shF1 COOLING WATER CIRCULATION PUMPS

DCS LOGIC DIAGRAMS-AMMONIA UTILITIES

AMMONIA AND UREA PRODUCTION, KINGISEPP

3000 MTPD AMMONIA

TECNIMONT IDENTIFICATION CODE	
Document Number	Revision
4124-JK-DD-217000010	03
Sheet 220 next 222	
Sh.Rev. 01	
CUSTOMER IDENTIFICATION CODE	
	03

INPUT

Logic Status	TAG
0= 1=	
0= NOT RUNNING 1= RUNNING	17-XS -M071 -F MCC DI -
0= NOT AVLB 1= AVAILABLE	17-XSA -M071 -F MCC DI -
0= LOCAL 1= REMOTE	17-XSR -M071 -F MCC DI -
0= 1=	
0= NORMAL 1= TRIP	17-XST-M071-FOR DCS SDI ESD
0= NOT ACTIVE 1= BYPASS ACTIVE	17-HS -07049 DCS - -
0= NOT OPEN 1= OPEN	17-MZSH -07040 Field DI -
0= NOT CLOSED 1= CLOSED	17-MZSL -07040 Field DI -
0= NOT AVLB 1= AVAILABLE	17-MXSA -07040 Field DI -
0= LOCAL 1= REMOTE	17-MXSR -07040 Field DI -
0= 1=	
0= 1=	

DCS SOFTWARE

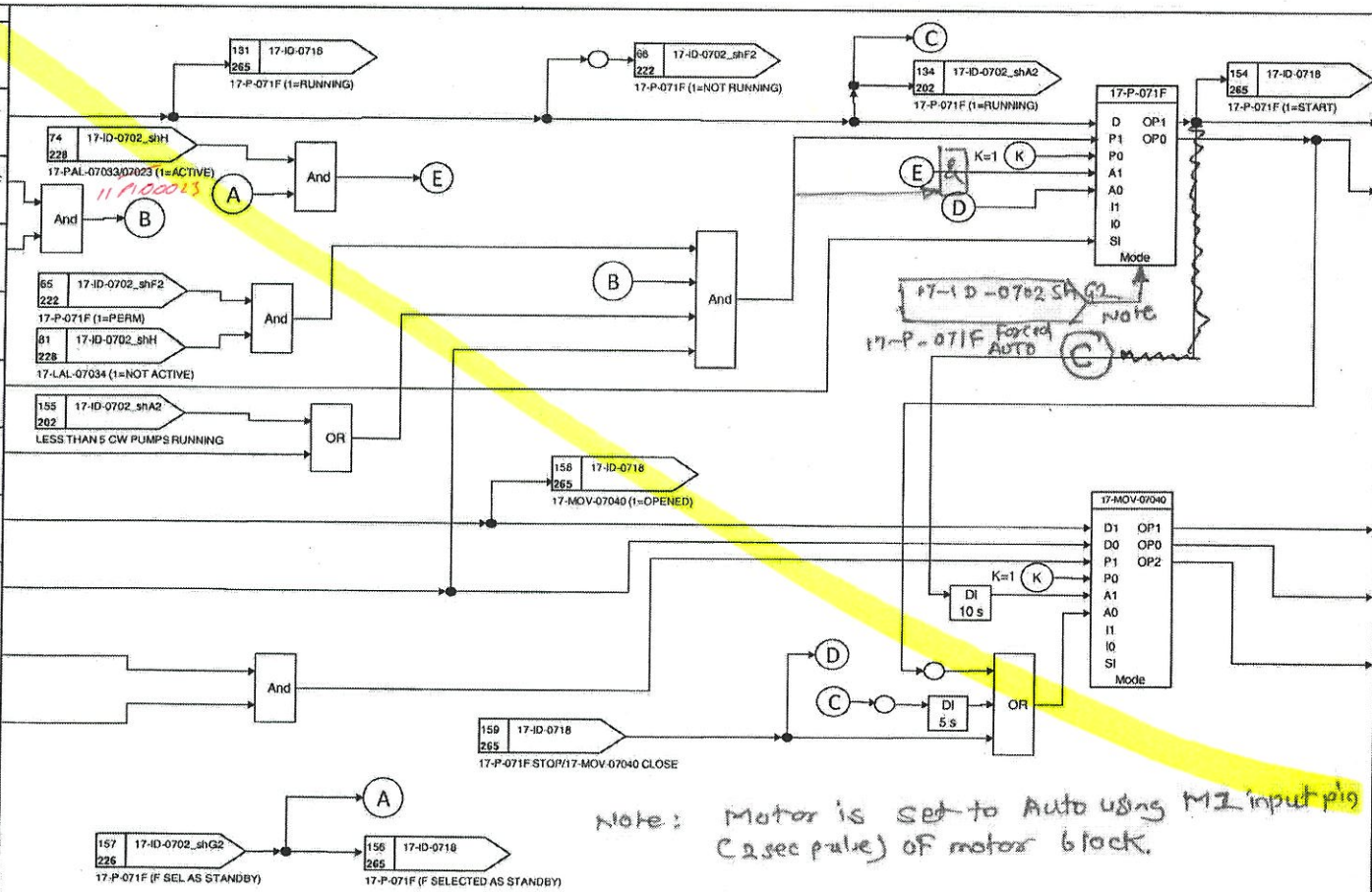

Note: Motor is set to Auto using M1 input pin (2 sec pulse) of motor block.

OUTPUT

TAG	Logic Status
	0= 1=
17-XYST -M071 -F MCC DO -	0= NO ACTION 1= START
17-XYSP -M071 -F MCC DO -	0= STOP 1= NO ACTION
	0= 1=
	0= 1=
	0= 1=
	0= 1=
17-MXYH -07040 Field DO -	0= NO ACTION 1= OPEN
17-MXYSP -07040 Field DO -	0= NO ACTION 1= STOP
17-MXYL -07040 Field DO -	0= NO ACTION 1= CLOSE
	0= 1=
	0= 1=
	0= 1=

04.02.25

04.02.25 MKC 04.02.25

9/2/22

16.02.2022

Eurochem

EUROCHEM	17-ID-0702_shF2 COOLING WATER CIRCULATION PUMPS DCS LOGIC DIAGRAMS-AMMONIA UTILITIES AMMONIA AND UREA PRODUCTION, KINGISEPP	TECNIMONT IDENTIFICATION CODE Document Number 4124-JK-DD-217000010 Revision 03 Sheet 222 next 224 Sh.Rev. 01
Tecnimont	3000 MTPD AMMONIA	CUSTOMER IDENTIFICATION CODE - 03

INPUT

Logic Status	TAG
0= 1=	
0= 1=	
0= 1=	
0= 1=	
0= 1=	
0= 1=	
0= 1=	
0= 1=	
0= 1=	
0= 1=	
0= 1=	
0= 1=	
0= 1=	

DCS SOFTWARE

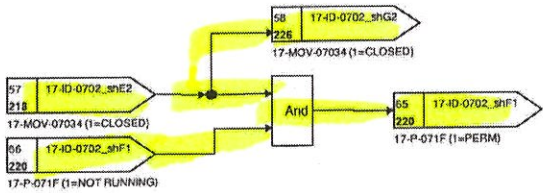

OUTPUT

TAG	Logic Status
	0= 1=
	0= 1=
	0= 1=
	0= 1=
	0= 1=
	0= 1=
	0= 1=
	0= 1=
	0= 1=
	0= 1=
	0= 1=
	0= 1=
	0= 1=

04.02.25 ГКС 04.02.25 04.02.25 9/2/22 16.02.2022 Eurochem

EUROCHEM

Tecnimont

17-ID-0702_shG1 COOLING WATER CIRCULATION PUMPS
DCS LOGIC DIAGRAMS-AMMONIA UTILITIES
AMMONIA AND UREA PRODUCTION, KINGISEPP

3000 MTPD AMMONIA

TECNIMONT IDENTIFICATION CODE	
Document Number	Revision
4124-JK-DD-217000010	03
Sheet 224 next 225	
Sh.Rev. 01	
CUSTOMER IDENTIFICATION CODE	
-	03

INPUT

Logic Status	TAG
0= 1=	
0= NOT RUNNING 1= RUNNING	17-XS -M071 -G MCC DI
0= NOT AVLB 1= AVAILABLE	17-XSA -M071 -G MCC DI
0= LOCAL 1= REMOTE	17-XSR -M071 -G MCC DI
0= 1=	
0= NORMAL 1= TRIP	17-XST-M071-GOR DCS ESD SDI
0= NOT ACTIVE 1= BYPASS ACTIVE	17-HS -07050 DCS -
0= NOT OPEN 1= OPEN	17-MZSH -07041 Field DI
0= NOT CLOSED 1= CLOSED	17-MZSL -07041 Field DI
0= NOT AVLB 1= AVAILABLE	17-MXSA -07041 Field DI
0= LOCAL 1= REMOTE	17-MXSR -07041 Field DI
0= 1=	
0= 1=	

DCS SOFTWARE

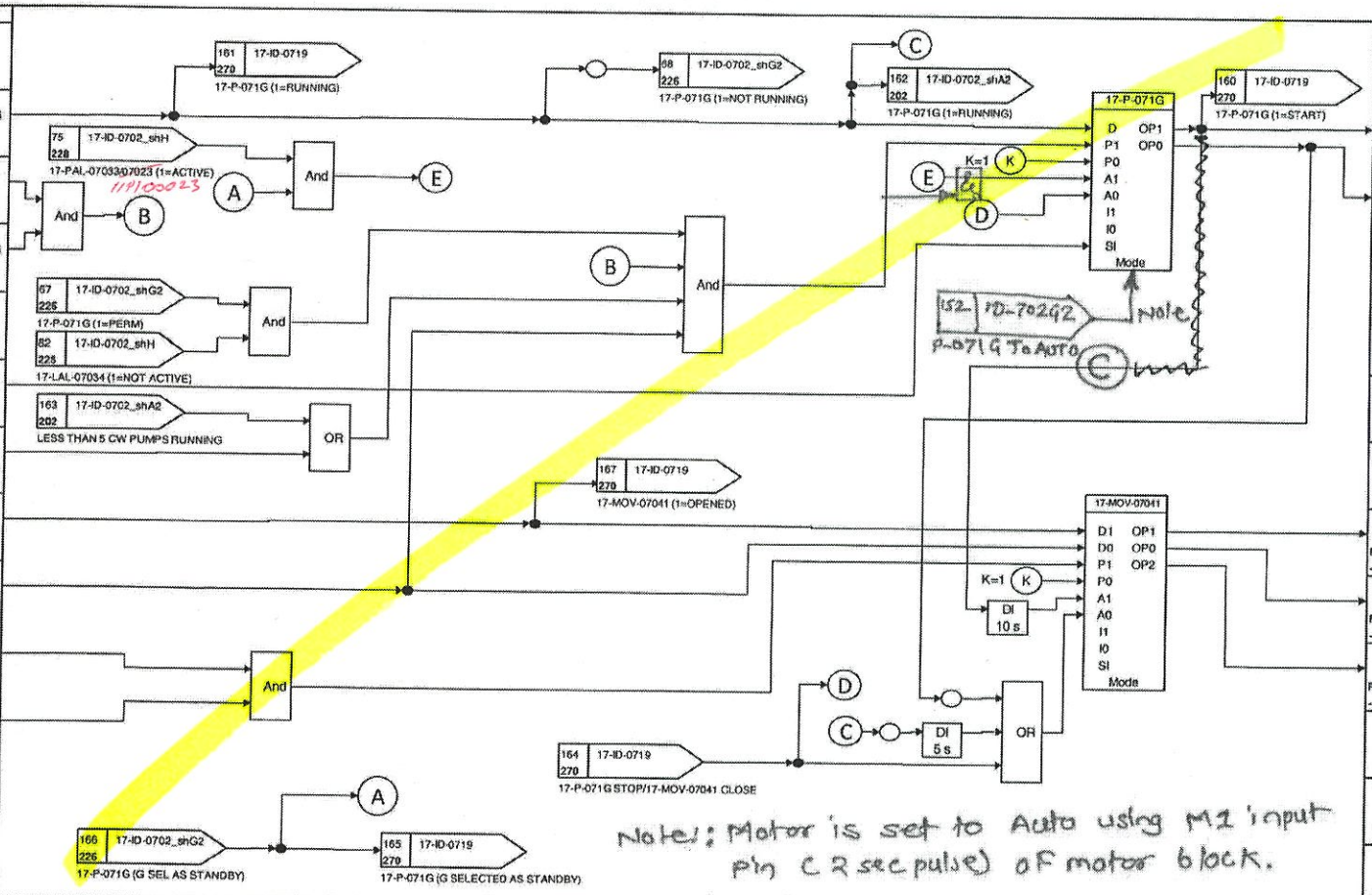

Note!: Motor is set to Auto using M1 input pin (2 sec pulse) of motor block.

OUTPUT

TAG	Logic Status
	0= 1=
17-XYST -M071 -G MCC DO	0= NO ACTION 1= START
17-XYSP -M071 -G MCC DO	0= STOP 1= NO ACTION
	0= 1=
	0= 1=
	0= 1=
	0= 1=
17-MXYH -07041 Field DO	0= NO ACTION 1= OPEN
17-MXYSP -07041 Field DO	0= NO ACTION 1= STOP
17-MXYL -07041 Field DO	0= NO ACTION 1= CLOSE
	0= 1=
	0= 1=
	0= 1=

04.02.25 NKC 04.02.25 04.02.25 9/2/22 16.02.2022

Eurochem

EuroChem

Tecnimont

17-ID-0702_shG2 COOLING WATER CIRCULATION PUMPS

DCS LOGIC DIAGRAMS-AMMONIA UTILITIES

AMMONIA AND UREA PRODUCTION, KINGISEPP

3000 MTPD AMMONIA

TECNIMONT IDENTIFICATION CODE	
Document Number	Revision
4124-JK-DD-217000010	03
Sheet 226 next 228	
Sh.Rev. 01	
CUSTOMER IDENTIFICATION CODE	
-	03

INPUT

Logic Status	TAG
0= 1=	
0= 1=	
0= 1=	
0= 1=	17-HS -07003 DCS SOFT DCS
0= 1=	
0= 1=	
0= 1=	
0= 1=	
0= 1=	
0= 1=	
0= 1=	
0= 1=	
0= 1=	

DCS SOFTWARE

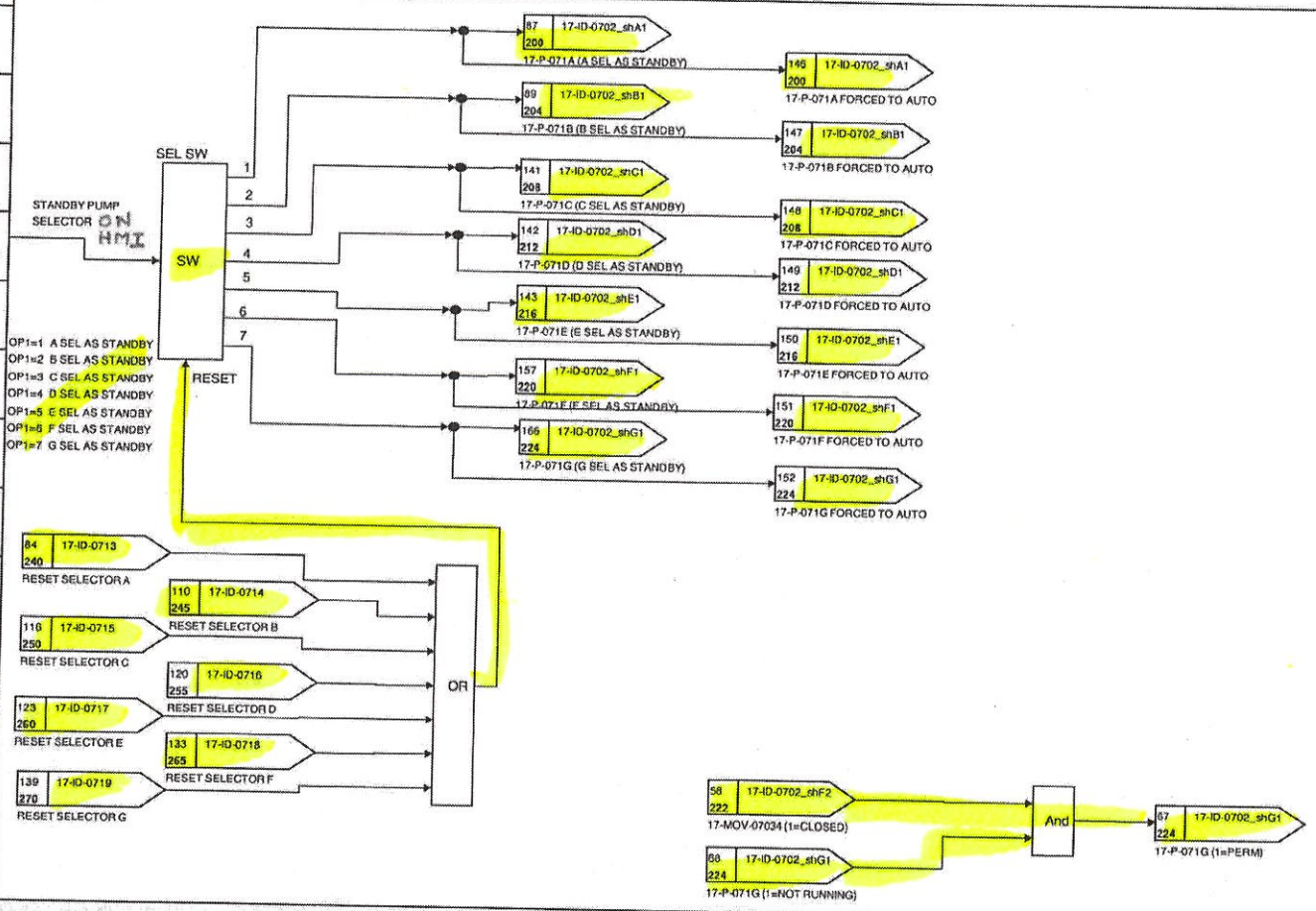

OUTPUT

TAG	Logic Status
	0= 1=
	0= 1=
	0= 1=
	0= 1=
	0= 1=
	0= 1=
	0= 1=
	0= 1=
	0= 1=
	0= 1=
	0= 1=
	0= 1=
	0= 1=
	0= 1=

04.02.25 ПКС 04.02.25 04.02.25 3/2/22 16.02.2022 Eurochem

EUROCHEM

Tecnimont

17-ID-0702_shH COOLING WATER CIRCULATION PUMPS

DCS LOGIC DIAGRAMS-AMMONIA UTILITIES

AMMONIA AND UREA PRODUCTION, KINGISEPP

3000 MTPD AMMONIA

TECNIMONT IDENTIFICATION CODE	
Document Number	Revision
4124-JK-DD-217000010	03
Sheet 228	next 240
Sh.Rev. 03	
CUSTOMER IDENTIFICATION CODE	
-	03

INPUT

Logic Status	TAG
0= 1=	
0= 1=	17-LT -07034 Field AI-RC
0= 1=	
0= 1=	
0= 1=	17-PT -07033 Field AI
0= 1=	17-PT -00023 Field AI
0= 1=	
0= IN 2 SELECTED 1= IN 1 SELECTED	17-HS -07033 DCS
0=	
0= NOT OPEN 1= OPEN	17-MZSH -07034 Field DI
0= NOT CLOSED 1= CLOSED	17-MZSL -07034 Field DI
0= NOT AVLB 1= AVAILABLE	17-MXSA -07034 Field DI
0= LOCAL 1= REMOTE	17-MXSR -07034 Field DI

DCS SOFTWARE

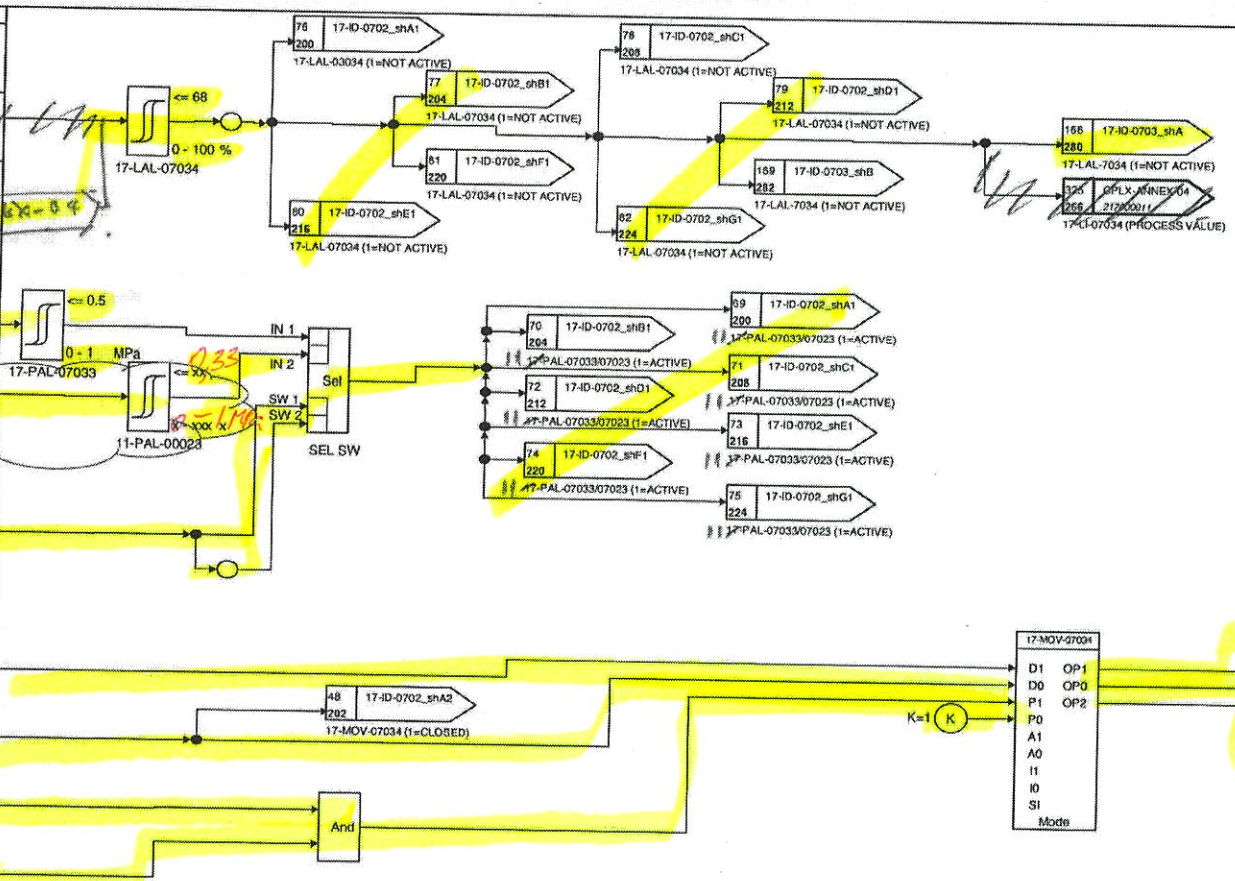

OUTPUT

TAG	Logic Status
	0= 1=
	0= 1=
	0= 1=
	0= 1=
	0= 1=
	0= 1=
	0= 1=
	0= 1=
	0= 1=
17-MXYH -07034 Field DO	0= NO ACTION 1= OPEN
17-MXYSP -07034 Field DO	0= NO ACTION 1= STOP
17-MXYL -07034 Field DO	0= NO ACTION 1= CLOSE
	0= 1=
	0= 1=

04.02.25 PKC 04.02.25 04.02.25 3/2/22 18.02.2022 Eurochem

EURODCHEM

Tecnimont

17-ID-0713 COOLING WATER CIRCULATION PUMP (17-P-071A)

DCS LOGIC DIAGRAMS-AMMONIA UTILITIES

AMMONIA AND UREA PRODUCTION, KINGISEPP

3000 MTPD AMMONIA

TECNIMONT IDENTIFICATION CODE	
Document Number	Revision
4124-JK-DD-217000010	03
Sheet 240 next 245	
Sh.Rev. 01	
CUSTOMER IDENTIFICATION CODE	
-	03

INPUT

Logic Status	TAG
0= 1=	
0= 1=	
0= 1=	17-PT -07041 Field AI -
0= 1=	
0= 1=	
0= 1=	
0= 1=	
0= 1=	
0= 1=	
0= 1=	
0= 1=	
0= 1=	
0= 1=	
0= 1=	

DCS SOFTWARE

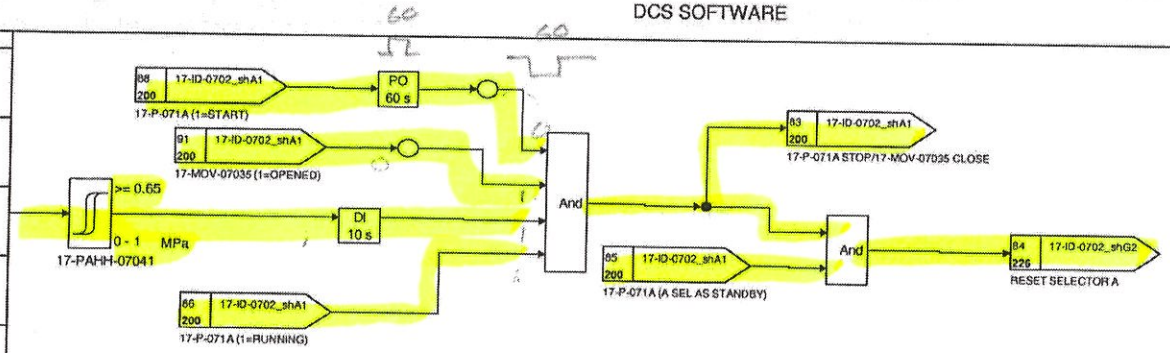

NOTE
DELAY TIMER IS ADJUSTABLE ON SITE

OUTPUT

TAG	Logic Status
	0= 1=
	0= 1=
	0= 1=
	0= 1=
	0= 1=
	0= 1=
	0= 1=
	0= 1=
	0= 1=
	0= 1=
	0= 1=
	0= 1=
	0= 1=
	0= 1=

04.02.25 TKC 04.02.25 04.02.25 7/2/22 7/2/21 Furochem 16.02.2022

EUROCHEM

Tecnimont

17-ID-0714 COOLING WATER CIRCULATION PUMP (17-P-071B)

DCS LOGIC DIAGRAMS-AMMONIA UTILITIES

AMMONIA AND UREA PRODUCTION, KINGISEPP

3000 MTPD AMMONIA

TECNIMONT IDENTIFICATION CODE	
Document Number	Revision
4124-JK-DD-217000010	03
Sheet 245	next 250
Sh.Rev. 02	
CUSTOMER IDENTIFICATION CODE	
-	03

INPUT

Logic Status	TAG
0= 1=	
0= 1=	
0= 1=	17-PT -07042 Field AI
0= 1=	
0= 1=	
0= 1=	
0= 1=	
0= 1=	
0= 1=	
0= 1=	
0= 1=	
0= 1=	
0= 1=	
0= 1=	

DCS SOFTWARE

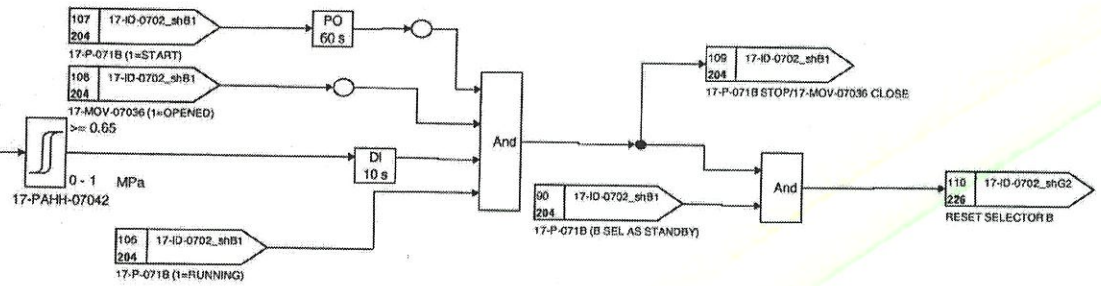

NOTE
DELAY TIMER IS ADJUSTABLE ON SITE

OUTPUT

TAG	Logic Status
	0= 1=
	0= 1=
	0= 1=
	0= 1=
	0= 1=
	0= 1=
	0= 1=
	0= 1=
	0= 1=
	0= 1=
	0= 1=
	0= 1=
	0= 1=
	0= 1=

P&ID:4124-XZ-DM-21707003

21.02.25 PKC 21.02.25 7/2/22 7/2/22 16.02.2022

Eurochem

EUROCHEM

Tecnimont

17-ID-0715 COOLING WATER CIRCULATION PUMP (17-P-071C)

DCS LOGIC DIAGRAMS-AMMONIA UTILITIES

AMMONIA AND UREA PRODUCTION, KINGISEPP

3000 MTPD AMMONIA

TECNIMONT IDENTIFICATION CODE	
Document Number	Revision
4124-JK-DD-217000010	03
Sheet 250 next 255	
Sh.Rev. 02	
CUSTOMER IDENTIFICATION CODE	
-	03

INPUT

Logic Status	TAG
0= 1=	
0= 1=	
0= 1=	17-PT -07043 Field AI -
0= 1=	
0= 1=	
0= 1=	
0= 1=	
0= 1=	
0= 1=	
0= 1=	
0= 1=	
0= 1=	
0= 1=	
0= 1=	

DCS SOFTWARE

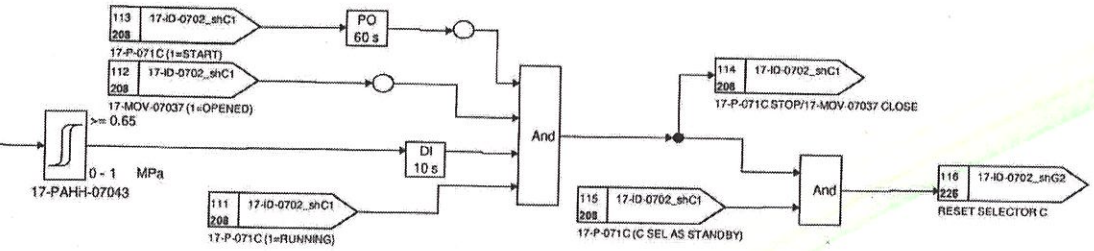

NOTE
DELAY TIMER IS ADJUSTABLE ON SITE

P&ID:4124-XZ-DM-21707007

OUTPUT

TAG	Logic Status
	0= 1=
	0= 1=
	0= 1=
	0= 1=
	0= 1=
	0= 1=
	0= 1=
	0= 1=
	0= 1=
	0= 1=
	0= 1=
	0= 1=
	0= 1=
	0= 1=

21.02.5 ПКС 21.02.25 21.02.25 7/2/22 7/2/22 16.02.2022 Eurochem

EUROCHEM

Tecnimont

17-ID-0716 COOLING WATER CIRCULATION PUMP (17-P-071D)

DCS LOGIC DIAGRAMS-AMMONIA UTILITIES

AMMONIA AND UREA PRODUCTION, KINGISEPP

3000 MTPD AMMONIA

TECNIMONT IDENTIFICATION CODE	
Document Number	Revision
4124-JK-DD-217000010	03
Sheet 255 next 260	
Sh.Rev. 02	
CUSTOMER IDENTIFICATION CODE	
	03

INPUT

Logic Status	TAG
0= 1=	
0= 1=	
0= 1=	17-PT -07044 Field AI
0= 1=	
0= 1=	
0= 1=	
0= 1=	
0= 1=	
0= 1=	
0= 1=	
0= 1=	
0= 1=	
0= 1=	
0= 1=	

DCS SOFTWARE

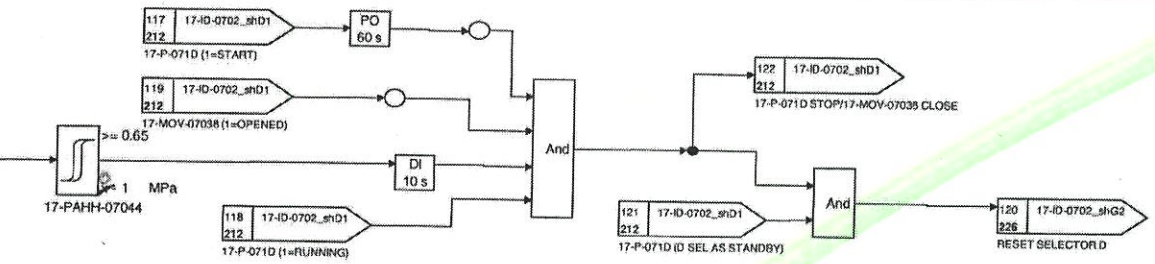

P&ID:4124-XZ-DM-21707003

OUTPUT

TAG	Logic Status
	0= 1=
	0= 1=
	0= 1=
	0= 1=
	0= 1=
	0= 1=
	0= 1=
	0= 1=
	0= 1=
	0= 1=
	0= 1=
	0= 1=
	0= 1=
	0= 1=

21.02.25 PKC 21.02.25 21.02.25 7/2/22 7/2/22 16.02.2022

Eurochem

EUROCHEM

Tecnimont

17-ID-0717 COOLING WATER CIRCULATION PUMP (17-P-071E)

DCS LOGIC DIAGRAMS-AMMONIA UTILITIES

AMMONIA AND UREA PRODUCTION, KINGISEPP

3000 MTPD AMMONIA

TECNIMONT IDENTIFICATION CODE	
Document Number	Revision
4124-JK-DD-217000010	03
Sheet 260 next 265	
Sh.Rev. 02	
CUSTOMER IDENTIFICATION CODE	
-	03

INPUT

Logic Status	TAG
0= 1=	
0= 1=	
0= 1=	17-PT -07045 Field At -
0= 1=	
0= 1=	
0= 1=	
0= 1=	
0= 1=	
0= 1=	
0= 1=	
0= 1=	
0= 1=	
0= 1=	
0= 1=	

DCS SOFTWARE

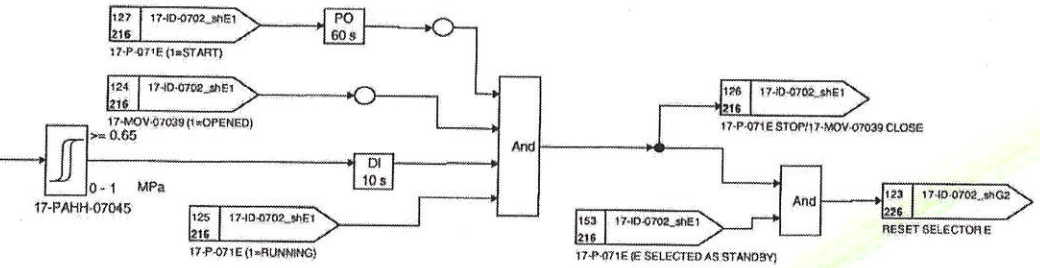

P&ID:4124-XZ-DM-21707007

OUTPUT

TAG	Logic Status
	0= 1=
	0= 1=
	0= 1=
	0= 1=
	0= 1=
	0= 1=
	0= 1=
	0= 1=
	0= 1=
	0= 1=
	0= 1=
	0= 1=
	0= 1=
	0= 1=
	0= 1=

21.02.25 PKC 21.02.25 21.02.25 7/2/22 7/2/22 16.02.2022 Eurochem

EuroChem	17-ID-0718 COOLING WATER CIRCULATION PUMP (17-P-071F) DCS LOGIC DIAGRAMS-AMMONIA UTILITIES AMMONIA AND UREA PRODUCTION, KINGISEPP	TECNIMONT IDENTIFICATION CODE Document Number: 4124-JK-DD-217000010 Revision: 03 Sheet 265 next 270 Sh.Rev. 02
Tecnimont	3000 MTPD AMMONIA	CUSTOMER IDENTIFICATION CODE - 03

INPUT

Logic Status	TAG
0= 1=	
0= 1=	
0= 1=	17-PT -07046 Field AI
0= 1=	
0= 1=	
0= 1=	
0= 1=	
0= 1=	
0= 1=	
0= 1=	
0= 1=	
0= 1=	
0= 1=	

DCS SOFTWARE

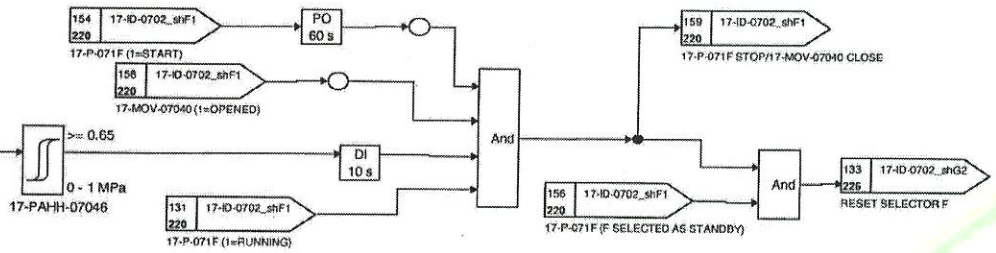

P&ID:4124-XZ-DM-21707007

OUTPUT

TAG	Logic Status
	0= 1=
	0= 1=
	0= 1=
	0= 1=
	0= 1=
	0= 1=
	0= 1=
	0= 1=
	0= 1=
	0= 1=
	0= 1=
	0= 1=
	0= 1=
	0= 1=

21.02.25 PKC 21.02.25 21.02.25 7/2/22 7/2/22 16.02.2022 Eurochem

EUROCHEM

Tecnimont

17-ID-0719 COOLING WATER CIRCULATION PUMP (17-P-071G)

DCS LOGIC DIAGRAMS-AMMONIA UTILITIES

AMMONIA AND UREA PRODUCTION, KINGISEPP

3000 MTPD AMMONIA

TECNIMONT IDENTIFICATION CODE	
Document Number	Revision
4124-JK-DD-217000010	03
Sheet 270	next 271
Sh.Rev. 02	
CUSTOMER IDENTIFICATION CODE	
	03

INPUT

Logic Status	TAG
0= 1=	
0= 1=	
0= 1=	17-PT -07047 Field AI
0= 1=	
0= 1=	
0= 1=	
0= 1=	
0= 1=	
0= 1=	
0= 1=	
0= 1=	
0= 1=	
0= 1=	

DCS SOFTWARE

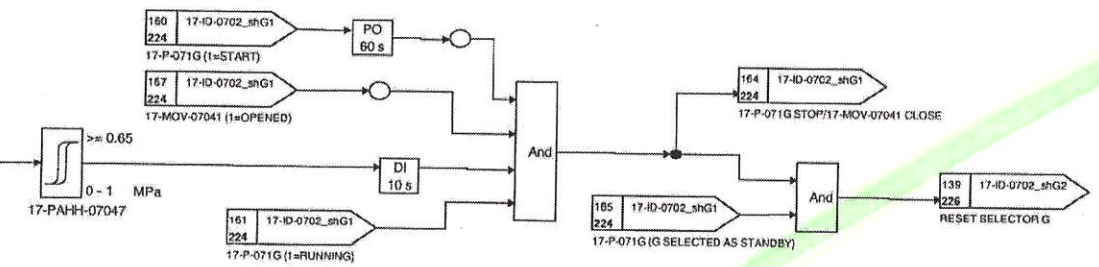

OUTPUT

TAG	Logic Status
	0= 1=
	0= 1=
	0= 1=
	0= 1=
	0= 1=
	0= 1=
	0= 1=
	0= 1=
	0= 1=
	0= 1=
	0= 1=
	0= 1=
	0= 1=
	0= 1=

P&ID:4124-XZ-DM-21707007

21.02.25 PKC 21.02.25 21.02.25 7/2/22 7/2/22. 16.02.2022

Eurochem

EUROCHEM

Tecnimont

17-ID-0780A STOP HEATER CT FAN 17-L-071-KM-071A

DCS LOGIC DIAGRAMS-AMMONIA UTILITIES

AMMONIA AND UREA PRODUCTION, KINGISEPP

3000 MTPD AMMONIA

TECNIMONT IDENTIFICATION CODE	
Document Number	Revision
4124-JK-DD-217000010	03
Sheet 271	next 272
Sh.Rev. 03	
CUSTOMER IDENTIFICATION CODE	
	03

INPUT

Logic Status	TAG
0= 1=	
0= NOT RUNNING 1= RUNNING	17-XS-H071-A MCC DI
0= NOT AVAILAB 1= AVAILABLE	17-XSA-H071-A MCC DI
0= LOCAL 1= REMOTE	17-XSR-H071-A MCC DI
0= 1=	
0= 1=	17-ZEV-0780B2 ESD CAI DCS
0= 1=	17-ZEV-0780C5 ESD SAI DCS
0= 070L05 1= 070L05	17-HS-0780L21 DCS
0= 1=	
0= 1=	
0= 1=	
0= 1=	
0= 1=	
0= 1=	

DCS SOFTWARE

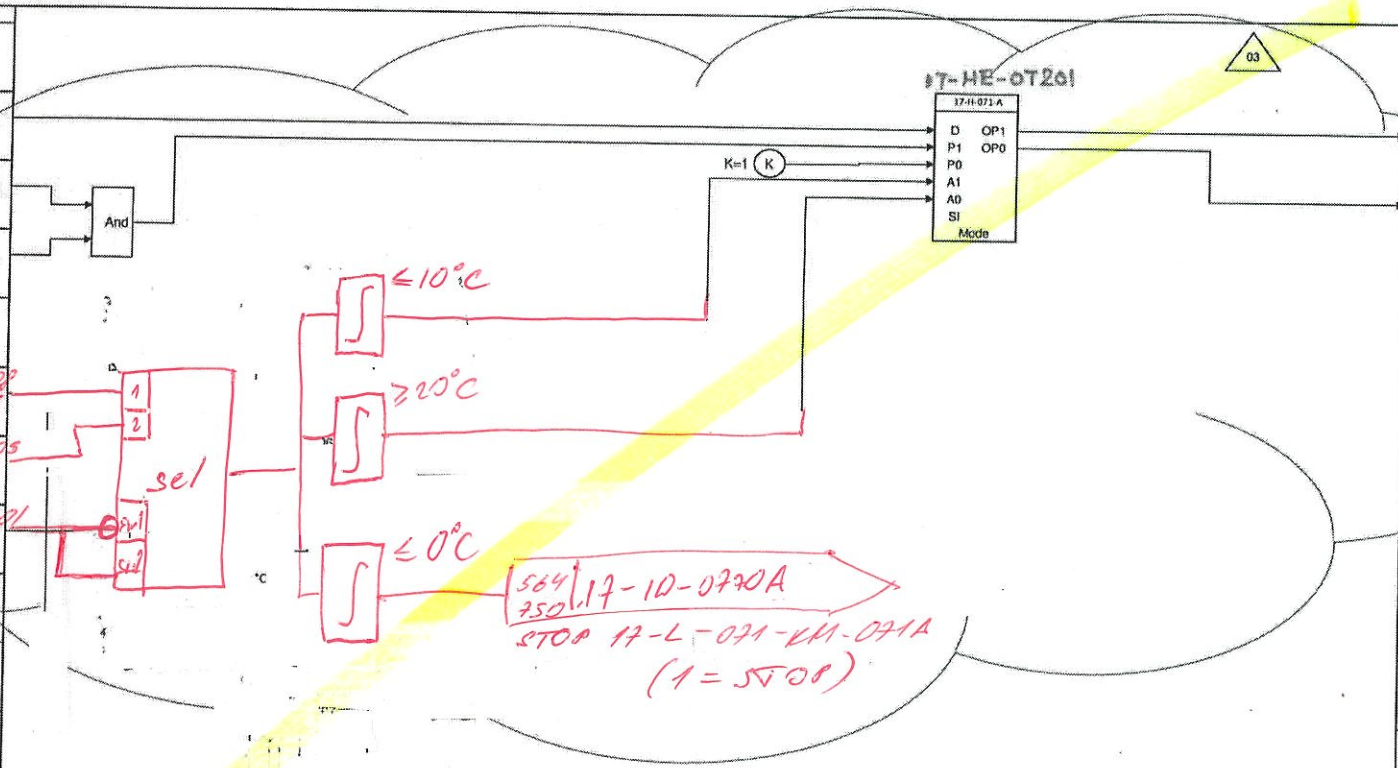

OUTPUT

TAG	Logic Status
	0= 1=
17-XYST-H071-A MCC DO	0= NO ACTION 1= START
17-XYSP-H071-A MCC DO	0= STOP 1= NO ACTION
	0= 1=
	0= 1=
	0= 1=
	0= 1=
	0= 1=
	0= 1=
	0= 1=
	0= 1=
	0= 1=
	0= 1=
	0= 1=

10.02.25 10.02.25 ГКС 10.02.25 11/2/22 17.02.2022

Eurochem

EUROCHEM

Tecnimont

17-ID-0780B STOP HEATER CT FAN 17-L-071-KM-071B

DCS LOGIC DIAGRAMS-AMMONIA UTILITIES

AMMONIA AND UREA PRODUCTION, KINGISEPP

3000 MTPD AMMONIA

TECNIMONT IDENTIFICATION CODE	
Document Number	Revision
4124-JK-DD-217000010	03
Sheet 272 next 273	
Sh.Rev. 03	
CUSTOMER IDENTIFICATION CODE	
-	03

INPUT | DCS SOFTWARE | OUTPUT

Logic Status	TAG
0= 1=	
0= NOT RUNNING 1= RUNNING	17-XS-H071-B MCC DI
0= NOT AVAILAB 1= AVAILABLE	17-XSA-H071-B MCC DI
0= LOCAL 1= REMOTE	17-XSR-H071-B MCC DI
0= 1=	
0= 1=	17TZT070210 ESD SAI DCS
0= 1=	17TZT070215 ESD SAI DCS
0= 070215 1= 070218	17HS070202 DCS
0= 1=	
0= 1=	
0= 1=	
0= 1=	
0= 1=	
0= 1=	

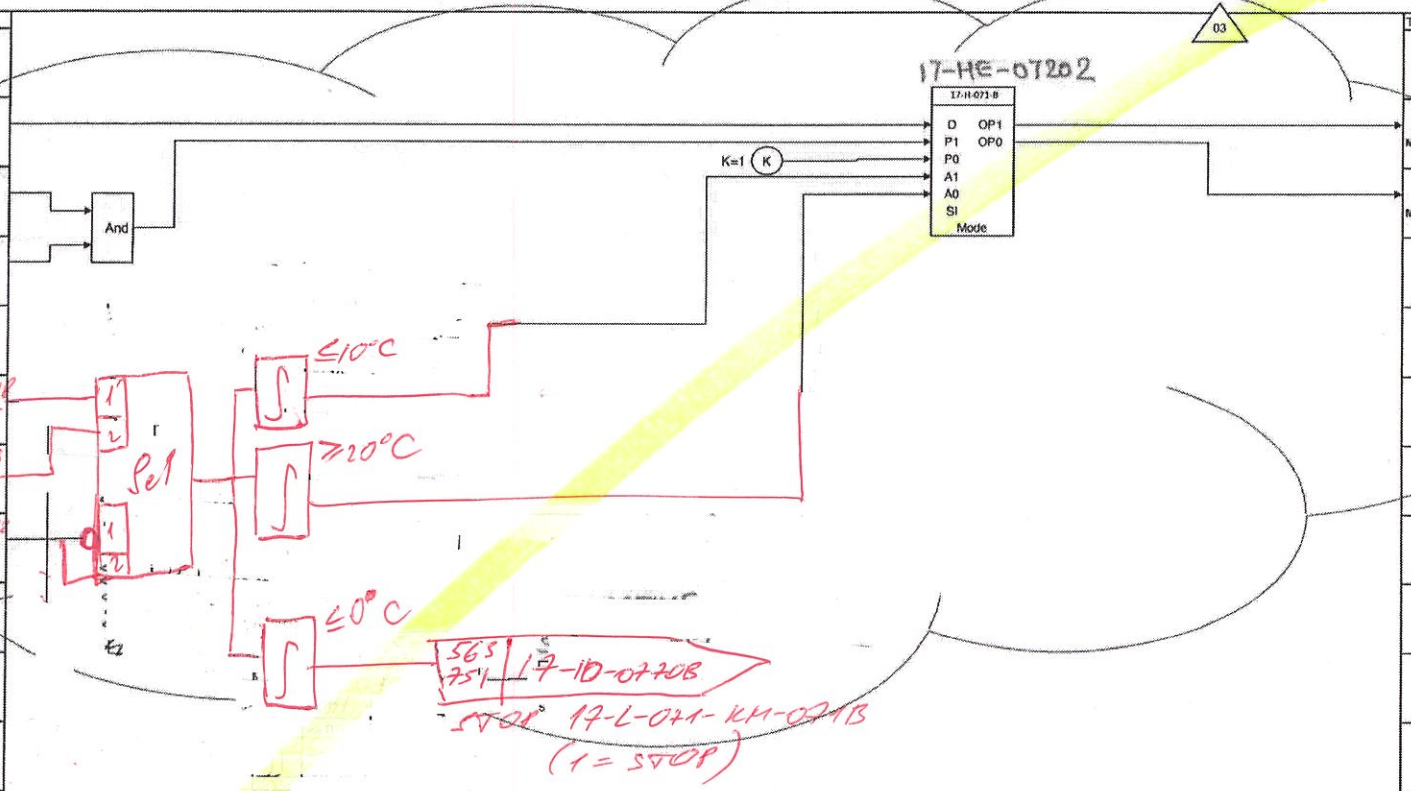

TAG	Logic Status
	0= 1=
17-XYST-H071-B MCC DO	0= NO ACTION 1= START
17-XYSP-H071-B MCC DO	0= STOP 1= NO ACTION
	0= 1=
	0= 1=
	0= 1=
	0= 1=
	0= 1=
	0= 1=
	0= 1=
	0= 1=
	0= 1=
	0= 1=

10.02.25 PKC 10.02.25 10.02.25 11/2/22 17.02.2022 Eurochem

EUROCHEM

Tecnimont

17-ID-0780C STOP HEATER CT FAN 17-L-071-KM-071C

DCS LOGIC DIAGRAMS-AMMONIA UTILITIES

AMMONIA AND UREA PRODUCTION, KINGISEPP

3000 MTPD AMMONIA

TECNIMONT IDENTIFICATION CODE	
Document Number	Revision
4124-JK-DD-217000010	03
Sheet 273	next 274
Sh.Rev. 03	
CUSTOMER IDENTIFICATION CODE	
-	03

INPUT — DCS SOFTWARE — OUTPUT

Logic Status	TAG
0= 1=	
0= NOT RUNNING 1= RUNNING	17-XS-H071-C MCC DI
0= NOT AVAILAB 1= AVAILABLE	17-XSA-H071-C MCC DI
0= LOCAL 1= REMOTE	17-XSR-H071-C MCC DI
0= 1=	
0= 1=	17TD0HH22 ESD SA1 DCS
0= 1=	17TD0HH23 ESD SA1 DCS
0= 0-0225 1= 070228	17HS0H020 DCS
0= 1=	
0= 1=	
0= 1=	
0= 1=	
0= 1=	
0= 1=	

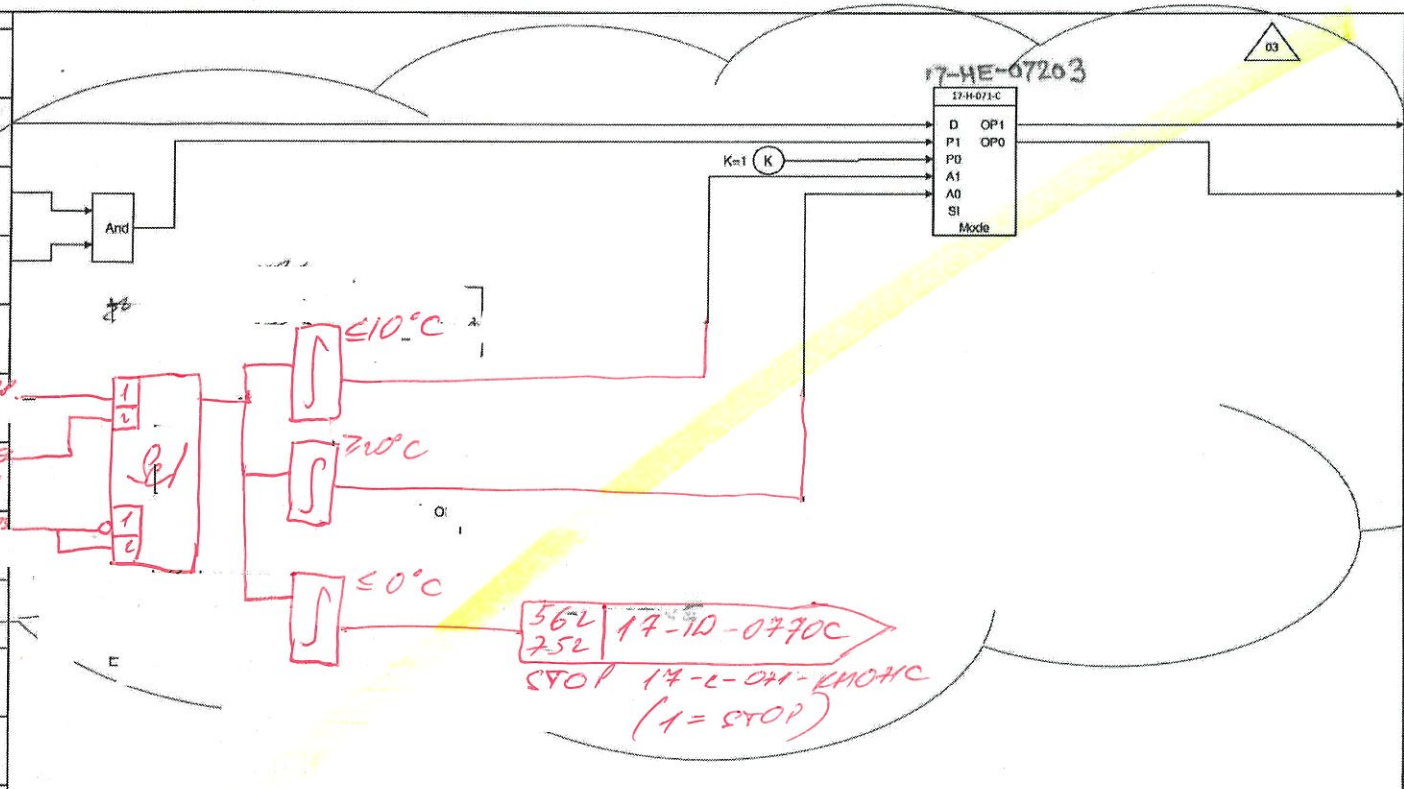

TAG	Logic Status
	0= 1=
17-XYST-H071-C MCC DO	0= NO ACTION 1= START
17-XYSP-H071-C MCC DO	0= STOP 1= NO ACTION
	0= 1=
	0= 1=
	0= 1=
	0= 1=
	0= 1=
	0= 1=
	0= 1=
	0= 1=
	0= 1=
	0= 1=

10.02.25 PKC 10.02.25 10.02.25 11/2/22 17.02.2022 Eurochem

EuroChem	17-ID-0780D STOP HEATER CT FAN 17-L-071-KM-071D DCS LOGIC DIAGRAMS-AMMONIA UTILITIES AMMONIA AND UREA PRODUCTION, KINGISEPP	TECNIMONT IDENTIFICATION CODE Document Number 4124-JK-DD-217000010 Revision 03 Sheet 274 next 275 Sh.Rev. 03
Tecnimont	3000 MTPD AMMONIA	CUSTOMER IDENTIFICATION CODE - 03

INPUT

Logic Status	TAG
0= 1=	
0= NOT RUNNING 1= RUNNING	17-XS-H071-D MCC DI
0= NOT AVAILAB 1= AVAILABLE	17-XSA-H071-D MCC DI
0= LOCAL 1= REMOTE	17-XSR-H071-D MCC DI
0= 1=	
0= 1=	17T2707023P ESD SAI DCS
0= 1=	17T2707023S ESD SAI DCS
0= 1= 070239 070238	17HS07204 DCS
0= 1=	
0= 1=	
0= 1=	
0= 1=	
0= 1=	

DCS SOFTWARE

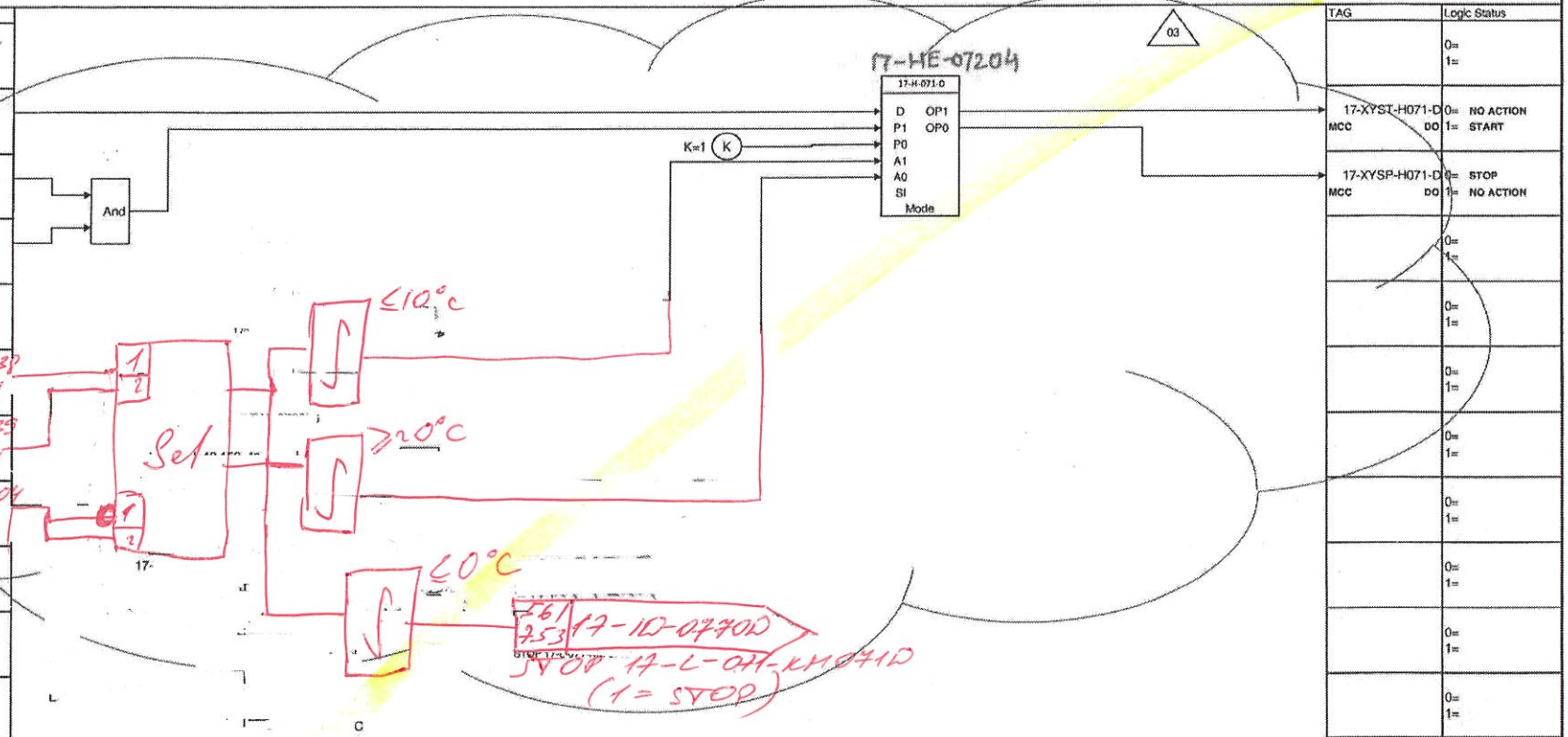

OUTPUT

TAG	Logic Status
	0= 1=
17-XYST-H071-D MCC DO	0= NO ACTION 1= START
17-XYSP-H071-D MCC DO	0= STOP 1= NO ACTION
	0= 1=
	0= 1=
	0= 1=
	0= 1=
	0= 1=
	0= 1=
	0= 1=
	0= 1=
	0= 1=
	0= 1=

10.02.25 РКС 10.02.25 10.02.25 17.02.2022 Eurochem

EUROCHEM

Tecnimont

17-ID-0780E STOP HEATER CT FAN 17-L-071-KM-071E

DCS LOGIC DIAGRAMS-AMMONIA UTILITIES

AMMONIA AND UREA PRODUCTION, KINGISEPP

3000 MTPD AMMONIA

TECNIMONT IDENTIFICATION CODE	
Document Number	Revision
4124-JK-DD-217000010	03
Sheet 275	next 276
Sh.Rev. 03	
CUSTOMER IDENTIFICATION CODE	
-	03

INPUT

Logic Status	TAG
0= 1=	
0= NOT RUNNING 1= RUNNING	17-XS-H071-E MCC DI
0= NOT AVAILAB 1= AVAILABLE	17-XSA-H071-E MCC DI
0= LOCAL 1= REMOTE	17-XSR-H071-E MCC DI
0= 1=	
0= 1=	17TZT070049 ESD DCS SAI
0= 1=	17TZ1070245 ESD DCS SAI
0= 1= 070245 070248	17HS070205 DCS
0= 1=	
0= 1=	
0= 1=	
0= 1=	
0= 1=	

DCS SOFTWARE

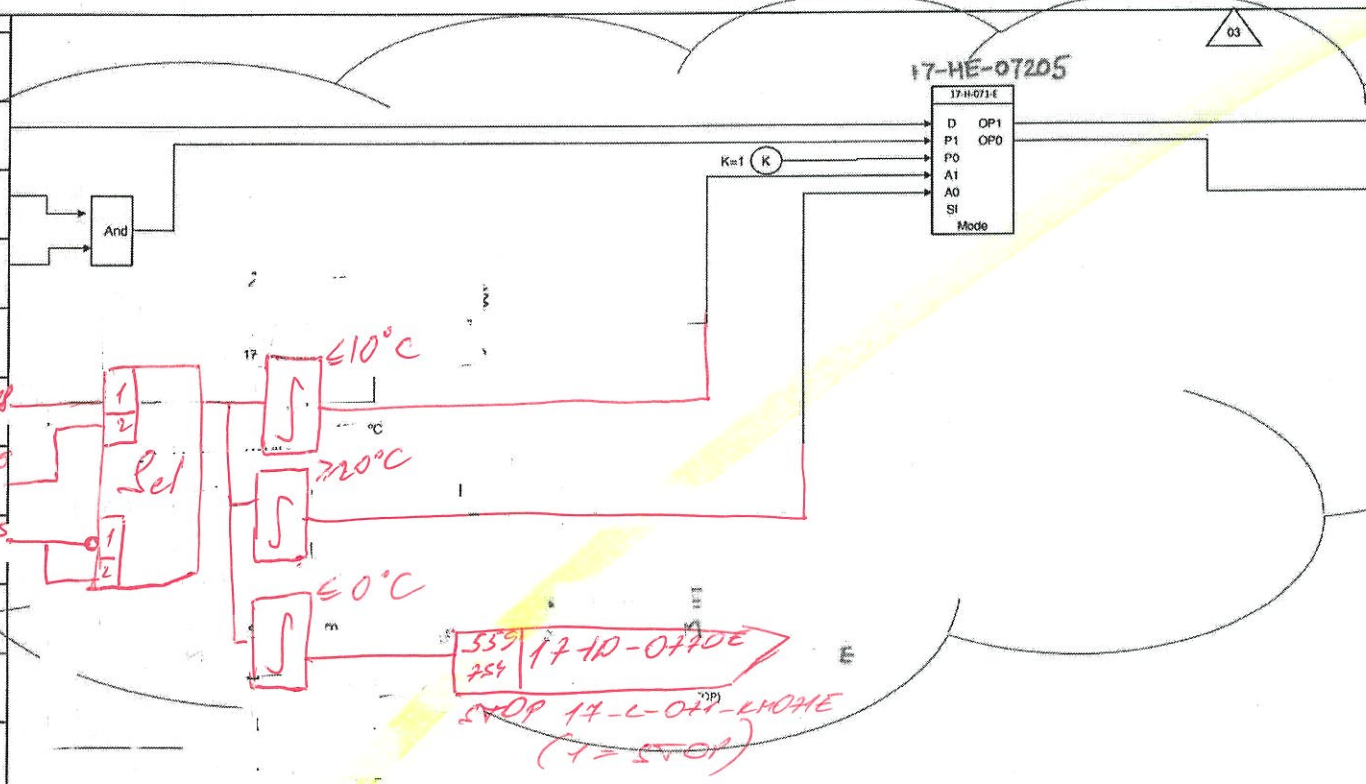

OUTPUT

TAG	Logic Status
	0= 1=
17-XYST-H071-E MCC DO	0= NO ACTION 1= START
17-XYSP-H071-E MCC DO	0= STOP 1= NO ACTION
	0= 1=
	0= 1=
	0= 1=
	0= 1=
	0= 1=
	0= 1=
	0= 1=
	0= 1=
	0= 1=
	0= 1=
	0= 1=

10.02.25 ГКС 10.02.25 10.02.25 11/2/22 12.02.2022

Eurochem

EURO CHEM

Tecnimont

17-ID-0780F STOP HEATER CT FAN 17-L-071-KM-071F

DCS LOGIC DIAGRAMS-AMMONIA UTILITIES

AMMONIA AND UREA PRODUCTION, KINGISEPP

3000 MTPD AMMONIA

TECNIMONT IDENTIFICATION CODE	
Document Number	Revision
4124-JK-DD-217000010	03
Sheet 276	next 277
Sh.Rev. 03	
CUSTOMER IDENTIFICATION CODE	
-	03

INPUT

Logic Status	TAG
0= 1=	
0= NOT RUNNING 1= RUNNING	17-XS-H071-F MCC DI
0= NOT AVAILAB 1= AVAILABLE	17-XSA-H071-F MCC DI
0= LOCAL 1= REMOTE	17-XSR-H071-F MCC DI
0= 1=	
0= 1=	17-ZV-070258 ESD SA1 DCS
0= 1=	17-ZV-070259 ESD SA1 DCS
0= 070259 1= 070258	17-HS-02906 17-TT-070257 Field AI DCS
0= 1=	
0= 1=	
0= 1=	
0= 1=	
0= 1=	

DCS SOFTWARE

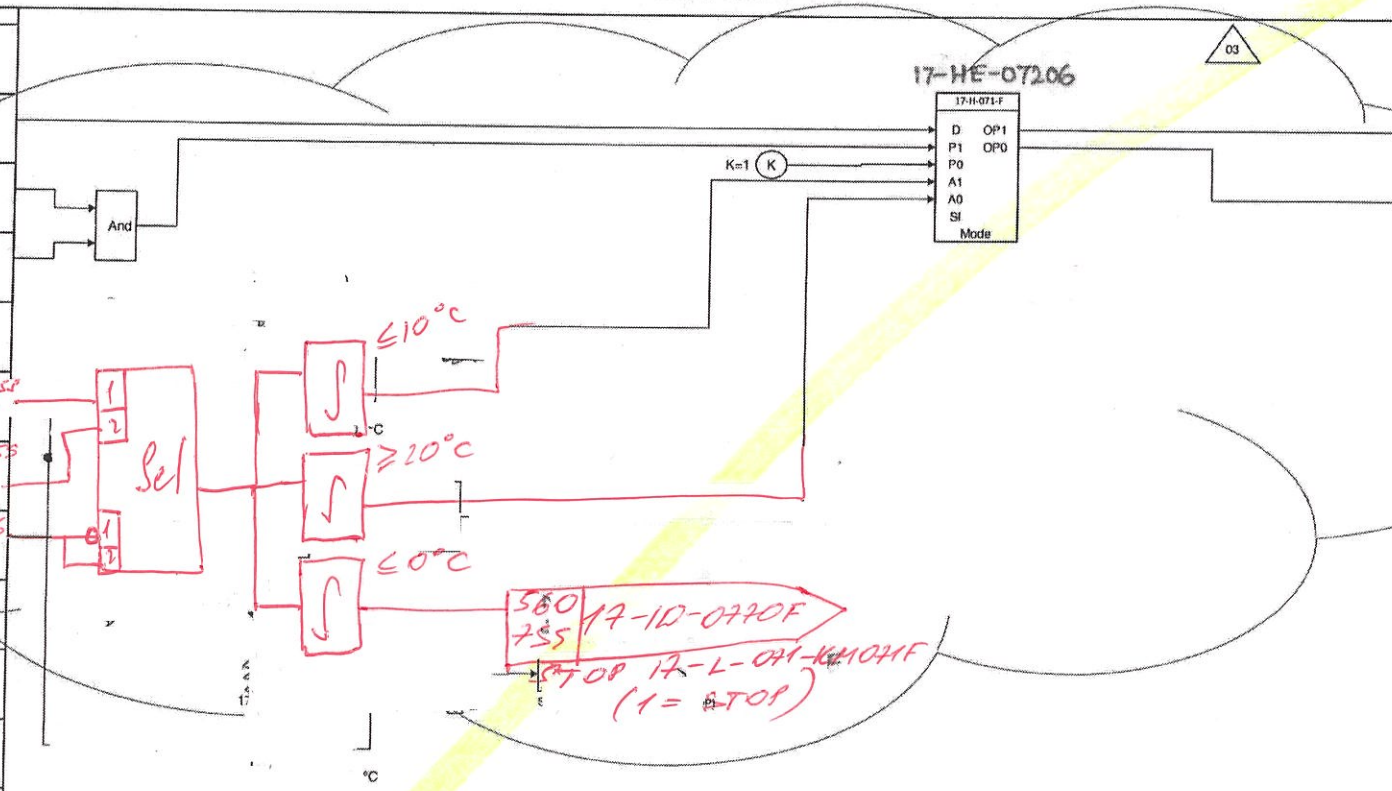

OUTPUT

TAG	Logic Status
	0= 1=
17-XYST-H071-F MCC DO	0= NO ACTION 1= START
17-XYSP-H071-F MCC DO	0= STOP 1= NO ACTION
	0= 1=
	0= 1=
	0= 1=
	0= 1=
	0= 1=
	0= 1=
	0= 1=
	0= 1=
	0= 1=
	0= 1=

10.02.25

TLC 10.02.25

10.02.25

17.02.2022

Eurochem

EUROCHEM

Tecnimont

17-ID-0780G STOP HEATER CT FAN 17-L-071-KM-071G

DCS LOGIC DIAGRAMS-AMMONIA UTILITIES

AMMONIA AND UREA PRODUCTION, KINGISEPP

3000 MTPD AMMONIA

TECNIMONT IDENTIFICATION CODE	
Document Number	Revision
4124-JK-DD-217000010	03
Sheet 277	next 278
Sh.Rev. 03	
CUSTOMER IDENTIFICATION CODE	
-	03

INPUT

Logic Status	TAG
0= 1=	
0= NOT RUNNING 1= RUNNING	17-XS-H071-G MCC DI
0= NOT AVAILAB 1= AVAILABLE	17-XSA-H071-G MCC DI
0= LOCAL 1= REMOTE	17-XSR-H071-G MCC DI
0= 1=	
0= 1=	17TZ1070266 ESD DCS SA1
0= 1=	17TZ1070265 ESD DCS SA1
0= 070269 1= 070268	17HS070204 17-TT-070267 Field DCS AI
0= 1=	
0= 1=	
0= 1=	
0= 1=	
0= 1=	

DCS SOFTWARE

03

17-HE-07207

17-H-071-G

D OP1
P1 OP0
P0
A1
A0
SI
Mode

K=1 K

And

Sel

1 2

0 1 2

40°C

≥20°C

≤0°C

ESD 756 17HD-0720G

STOP 17-L-071-KM071G (1=STOP)

(1=STOP)

°C

OUTPUT

TAG	Logic Status
	0= 1=
17-XYST-H071-G MCC DO	0= NO ACTION 1= START
17-XYSP-H071-G MCC DO	0= STOP 1= NO ACTION
	0= 1=
	0= 1=
	0= 1=
	0= 1=
	0= 1=
	0= 1=
	0= 1=
	0= 1=
	0= 1=
	0= 1=

10.02.25

PKC 10.02.25

10.02.25

17.02.2022

EUROCHEM

Tecnimont

17-ID-0780H STOP HEATER CT FAN 17-L-071-KM-071H

DCS LOGIC DIAGRAMS-AMMONIA UTILITIES

AMMONIA AND UREA PRODUCTION, KINGISEPP

3000 MTPD AMMONIA

TECNIMONT IDENTIFICATION CODE			
Document Number			Revision
4124-JK-DD-217000010			03
Sheet	278	next	280
Sh.Rev.	03		
CUSTOMER IDENTIFICATION CODE			
			03

DCS SOFTWARE

INPUT

Logic Status	TAG
0= 1=	
0= NOT RUNNING 1= RUNNING	17-XS-H071-H MCC DI
0= NOT AVAILAB 1= AVAILABLE	17-XSA-H071-H MCC DI
0= LOCAL 1= REMOTE	17-XSR-H071-H MCC DI
0= 1=	
0= 1=	17TZ7010025 ESD 76 DCS SAI
0= 1=	17TZ7010025 ESD SAI DCS
0= 070L 79 1= 070278	17 A 5070W DCS
0= 1=	
0= 1=	
0= 1=	
0= 1=	
0= 1=	

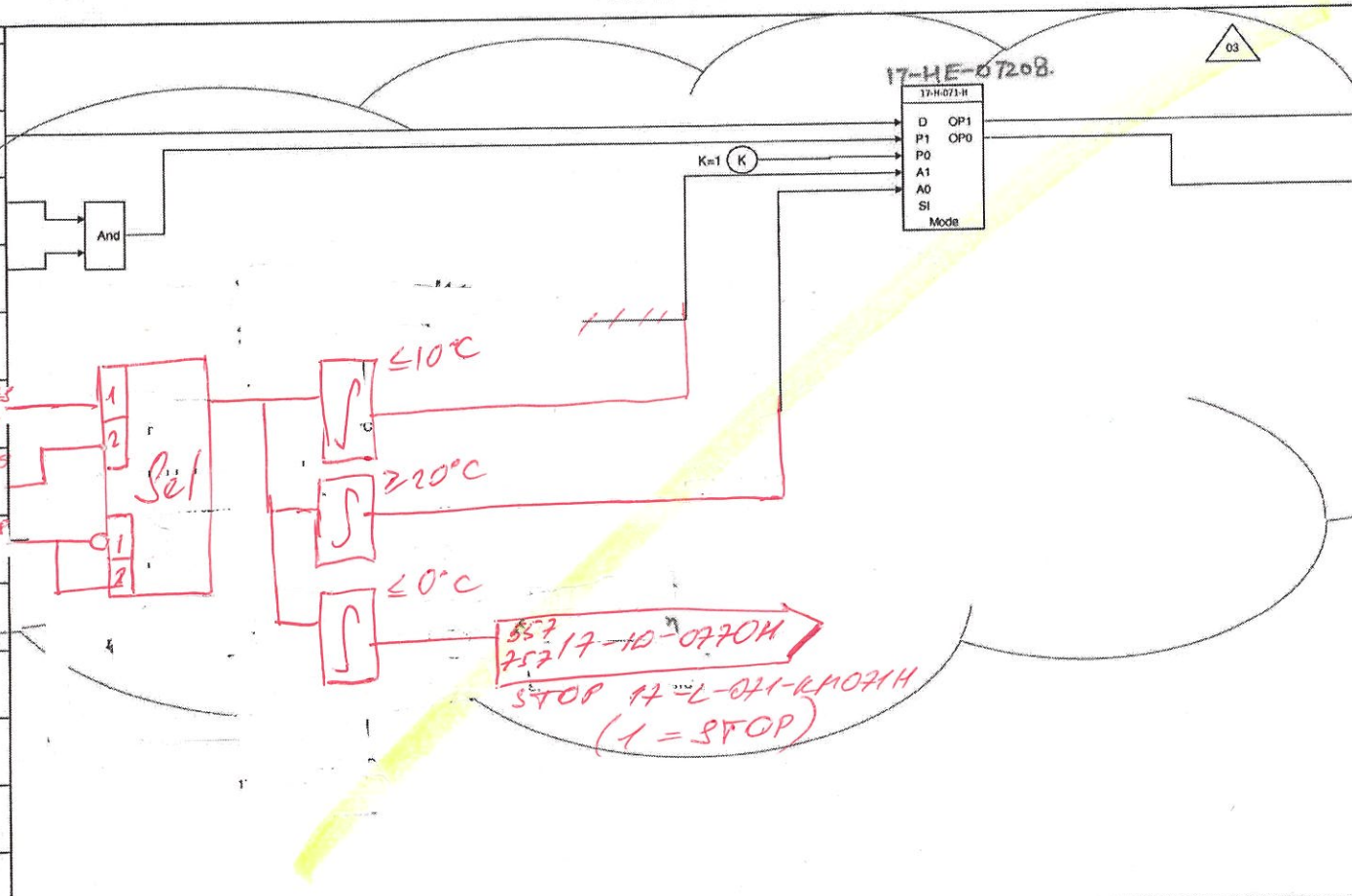

OUTPUT

TAG	Logic Status
	0= 1=
17-XYST-H071-H MCC DO	0= NO ACTION 1= START
17-XYSP-H071-H MCC DO	0= STOP 1= NO ACTION
	0= 1=
	0= 1=
	0= 1=
	0= 1=
	0= 1=
	0= 1=
	0= 1=
	0= 1=
	0= 1=
	0= 1=

10.02.25 ПКС 10.02.25 10.02.25 1/12/22 17.02.2022 Eurochem

EUROCHEM

Tecnimont

17-ID-0703_shA EMERGENCY COOLING WATER PUMPS
DCS LOGIC DIAGRAMS-AMMONIA UTILITIES
AMMONIA AND UREA PRODUCTION, KINGISEPP

3000 MTPD AMMONIA

TECNIMONT IDENTIFICATION CODE	
Document Number	Revision
4124-JK-DD-217000010	03
Sheet 280	next 282
Sh.Rev. 02	
CUSTOMER IDENTIFICATION CODE	
-	03

INPUT

Logic Status	TAG
0= NORMAL 1= ALARM	17-XA -00718 DCS SDI ESD
0= NOT RUNNING 1= RUNNING	17-XS -M073 -A MCC DI
0= NOT AVLB 1= AVAILABLE	17-XSA -M073 -A MCC DI
0= LOCAL 1= REMOTE	17-XSR -M073 -A MCC DI
0= NOT ACTIVE 1= BYPASS ACTIVE	17-HS -07070 DCS -
0= 1=	
0= NORMAL 1= TRIP	17-XST-M073-AOR DCS SDI ESD
0= NOT OPEN 1= OPEN	17-MZSH -07042 Field DI
0= NOT CLOSED 1= CLOSED	17-MZSL -07042 Field DI
0= NOT AVLB 1= AVAILABLE	17-MXSA -07042 Field DI
0= LOCAL 1= REMOTE	17-MXSR -07042 Field DI
0= 1=	
0= 1=	

DCS SOFTWARE

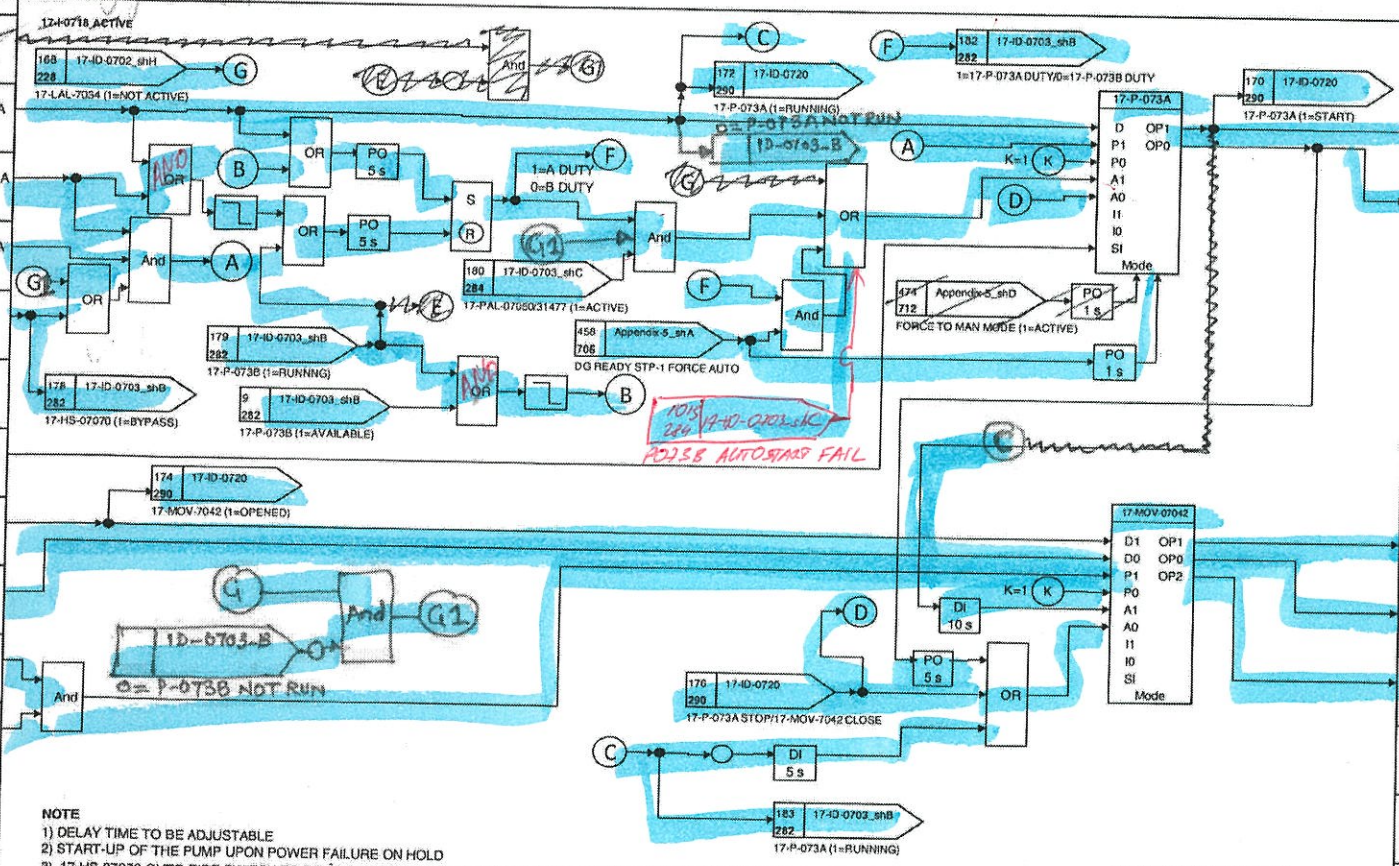

OUTPUT

TAG	Logic Status
	0= 1=
17-XYST -M073 -A MCC DO	0= NO ACTION 1= START
17-XYSP -M073 -A MCC DO	0= STOP 1= NO ACTION
	0= 1=
	0= 1=
	0= 1=
	0= 1=
17-MXYH -07042 Field DO	0= NO ACTION 1= OPEN
17-MXYSP -07042 Field DO	0= NO ACTION 1= STOP
17-MXYL -07042 Field DO	0= NO ACTION 1= CLOSE
	0= 1=
	0= 1=
	0= 1=

NOTE
1) DELAY TIME TO BE ADJUSTABLE
2) START-UP OF THE PUMP UPON POWER FAILURE ON HOLD
3) 17-HS-07070 OVER-RIDE SWITCH TO BE ACTIVATED BY OPERATOR MANUALLY ONLY IN CASE OF COOLING WATER BASIN EMPTYING ACTIVITIES.
4) ~~Duty~~ Standby switchover Logic implemented using DC-02.

P&ID: 4124-XZ-DM-21707007

14.02.25 PKC 14.02.25 14.02.25 7/2/22 12/2/22 17.02.2022

EUROCHEM

Tecnimont

17-ID-0703_shB EMERGENCY COOLING WATER PUMPS

DCS LOGIC DIAGRAMS-AMMONIA UTILITIES

AMMONIA AND UREA PRODUCTION, KINGISEPP

3000 MTPD AMMONIA

TECNIMONT IDENTIFICATION CODE	
Document Number	Revision
4124-JK-DD-217000010	03
Sheet 282 next 284	
Sh.Rev. 02	
CUSTOMER IDENTIFICATION CODE	
-	03

INPUT

Logic Status	TAG
0= NORMAL 1= ALARM	17-XA -0712 DCS SDI ESD
0= NOT RUNNING 1= RUNNING	17-XS -M073 -B MCC DI
0= LOCAL 1= REMOTE	17-XSR -M073 -B MCC DI
0= NOT AVLB 1= AVAILABLE	17-XSA -M073 -B MCC DI
0= 1=	
0= 1=	
0= NORMAL 1= TRIP	17-XST-M073-BOR DCS SDI ESD
0= NOT OPEN 1= OPEN	17-MZSH -07043 Field DI
0= NOT CLOSED 1= CLOSED	17-MZSL -07043 Field DI
0= NOT AVLB 1= AVAILABLE	17-MXSA -07043 Field DI
0= LOCAL 1= REMOTE	17-MXSR -07043 Field DI
0= 1=	
0= 1=	

DCS SOFTWARE

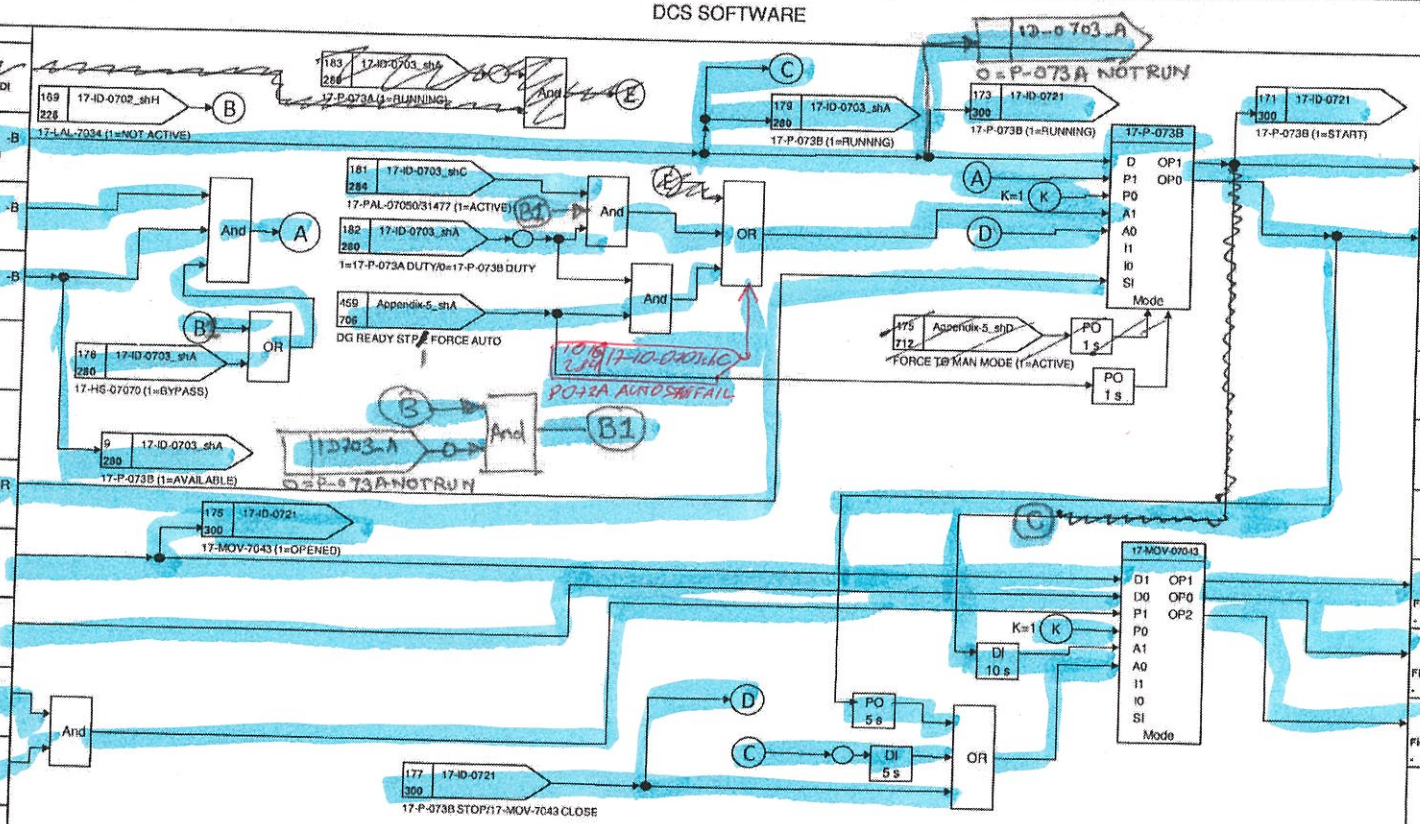

OUTPUT

TAG	Logic Status
	0= 1=
17-XYST -M073 -B MCC DO	0= NO ACTION 1= START
17-XYSP -M073 -B MCC DO	0= STOP 1= NO ACTION
	0= 1=
	0= 1=
	0= 1=
	0= 1=
17-MXYH -07043 Field DO	0= NO ACTION 1= OPEN
17-MXYSP -07043 Field DO	0= NO ACTION 1= STOP
17-MXYL -07043 Field DO	0= NO ACTION 1= CLOSE
	0= 1=
	0= 1=
	0= 1=

NOTE

1) DELAY TIME TO BE ADJUSTABLE
2) START-UP OF THE PUMP UPON POWER FAILURE ON HOLD
3) 17-HS-07070 OVER-RIDE SWITCH TO BE ACTIVATED BY OPERATOR MANUALLY ONLY IN CASE OF COOLING WATER BASIN EMPTYING ACTIVITIES.
4) Duty standby switchover logic implemented using DC-02.

14.02.25 TKC 14.02.25 14.02.25 7/2/22 7/2/22 17.02.2022

EUROCHEM

Tecnimont

17-ID-0703_shC EMERGENCY COOLING WATER PUMPS

DCS LOGIC DIAGRAMS-AMMONIA UTILITIES

AMMONIA AND UREA PRODUCTION, KINGISEPP

3000 MTPD AMMONIA

TECNIMONT IDENTIFICATION CODE	
Document Number	Revision
4124-JK-DD-217000010	03
Sheet 284	next 290
Sh.Rev. 03	
CUSTOMER IDENTIFICATION CODE	
	03

INPUT

Logic Status	TAG
0= 1=	
0= 1=	
0= 1=	
0= 1=	17-PT -07050 Field AI
0= 1=	
0= 1=	11-PT -31477 Field AI
0= 1=	
0= IN 2 SELECTED 1= IN 1 SELECTED	17-HS -07050A DCS
0= 1=	
0= 1=	
0= 1=	
0= 1=	
0= 1=	

DCS SOFTWARE

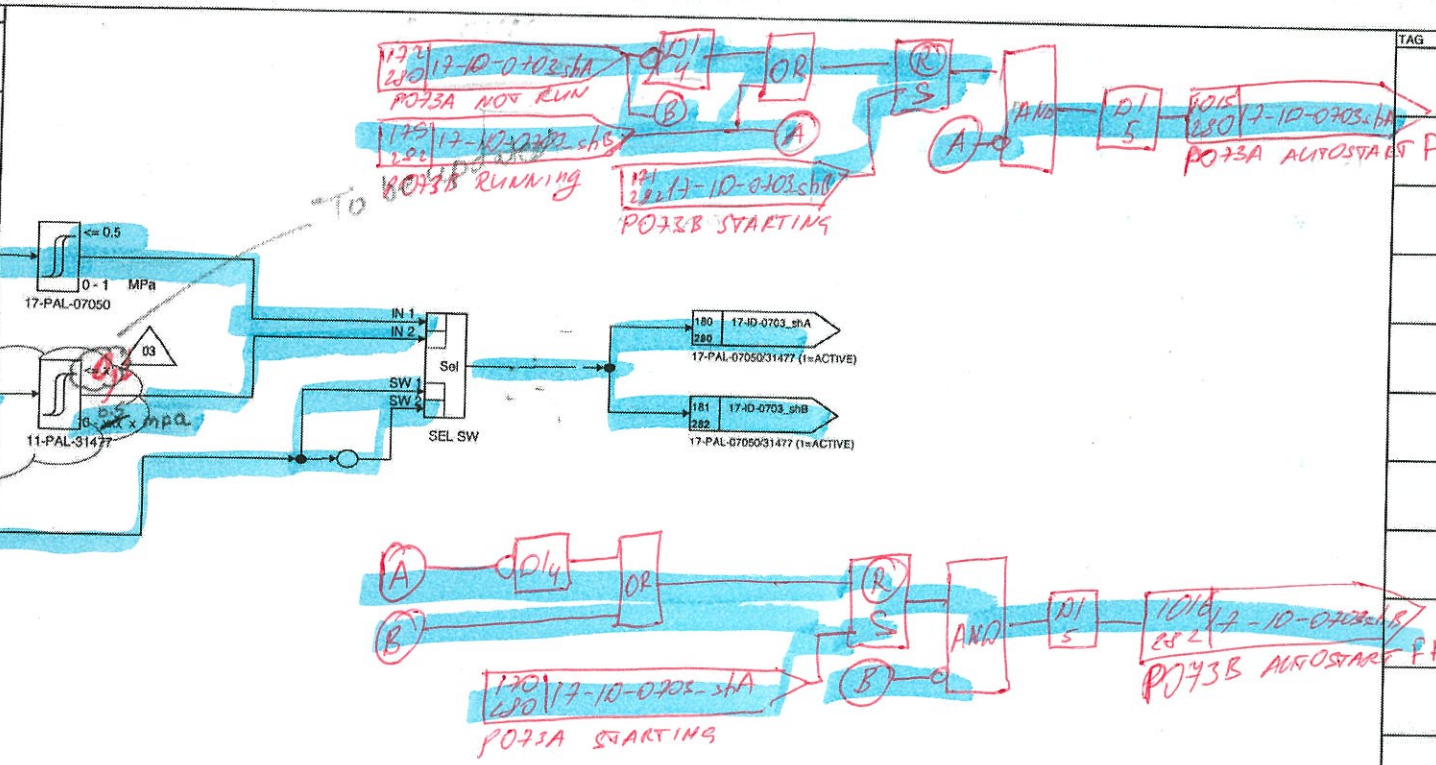

OUTPUT

TAG	Logic Status
	0= 1=
	0= 1=
	0= 1=
	0= 1=
	0= 1=
	0= 1=
	0= 1=
	0= 1=
	0= 1=
	0= 1=
	0= 1=
	0= 1=
	0= 1=
	0= 1=
	0= 1=

14.02.25 PKC 14.02.25 14.02.25 7/2/22 7/2/22 17.02.2022

EuroChem

Tecnimont

17-ID-0720 EMERGENCY COOLING WATER PUMP (17-P-073A)

DCS LOGIC DIAGRAMS-AMMONIA UTILITIES

AMMONIA AND UREA PRODUCTION, KINGISEPP

3000 MTPD AMMONIA

TECNIMONT IDENTIFICATION CODE	
Document Number	Revision
4124-JK-DD-217000010	03
Sheet 290	next 300
Sh.Rev. 02	
CUSTOMER IDENTIFICATION CODE	
-	03

INPUT

Logic Status	TAG
0= 1=	
0= 1=	
0= 1=	
0= 1=	17-PT -07048 Field AI
0= 1=	
0= 1=	
0= 1=	
0= 1=	
0= 1=	
0= 1=	
0= 1=	
0= 1=	
0= 1=	
0= 1=	

DCS SOFTWARE

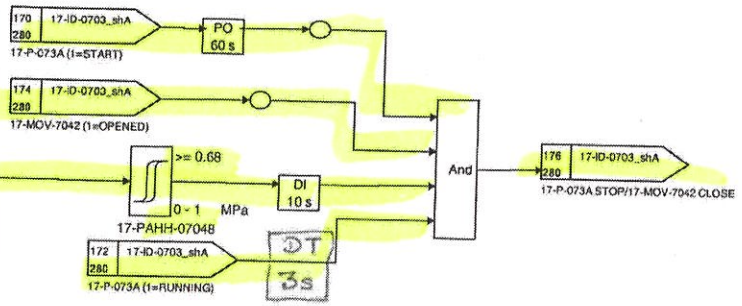

OUTPUT

TAG	Logic Status
	0= 1=
	0= 1=
	0= 1=
	0= 1=
	0= 1=
	0= 1=
	0= 1=
	0= 1=
	0= 1=
	0= 1=
	0= 1=
	0= 1=
	0= 1=
	0= 1=

P&ID:4124-XZ-DM-21707007

14.02.25 ГКС 14.02.25 14.02.25 7/2/22 7/2/22 12.02.2022 Eurochem

EuroChem

Tecnimont

17-ID-0721 EMERGENCY COOLING WATER PUMP (17-P-073B)

DCS LOGIC DIAGRAMS-AMMONIA UTILITIES

AMMONIA AND UREA PRODUCTION, KINGISEPP

3000 MTPD AMMONIA

TECNIMONT IDENTIFICATION CODE	
Document Number	Revision
4124-JK-DD-217000010	03
Sheel 300 next 310	
Sh.Rev. 02	
CUSTOMER IDENTIFICATION CODE	
-	03

INPUT

Logic Status	TAG
0= 1=	
0= 1=	
0= 1=	
0= 1=	17-PT -07049 Field AI -
0= 1=	
0= 1=	
0= 1=	
0= 1=	
0= 1=	
0= 1=	
0= 1=	
0= 1=	
0= 1=	
0= 1=	

DCS SOFTWARE

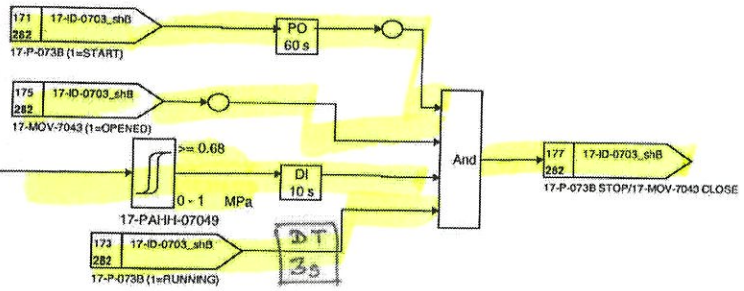

OUTPUT

TAG	Logic Status
	0= 1=
	0= 1=
	0= 1=
	0= 1=
	0= 1=
	0= 1=
	0= 1=
	0= 1=
	0= 1=
	0= 1=
	0= 1=
	0= 1=
	0= 1=
	0= 1=

P&ID:4124-XZ-DM-21707007

14.02.25 ГКС 14.02.25 14.02.25 7/2/22 7/2/22 17.02.2022 Eurochem

EUROCHEM

Tecnimont

17-ID-0704A_shA WASTE WATER PUMPS (17-P-072A)

DCS LOGIC DIAGRAMS-AMMONIA UTILITIES

AMMONIA AND UREA PRODUCTION, KINGISEPP

3000 MTPD AMMONIA

TECNIMONT IDENTIFICATION CODE	
Document Number	Revision
4124-JK-DD-217000010	03
Sheet 310	next 312
Sh.Rev. 01	
CUSTOMER IDENTIFICATION CODE	
-	03

INPUT

Logic Status	TAG
0= 1=	
0= NOT RUNNING 1= RUNNING	17-XS -M072 -A MCC DI
0= LOCAL 1= REMOTE	17-XSR -M072 -A MCC DI
0= NOT AVLB 1= AVAILABLE	17-XSA -M072 -A MCC DI
0= 1=	
0= TRIP 1= NORMAL	17-XLS -M072A Field DI
0= TRIP 1= NORMAL	17-TSH -M072A Field DI
0= 1=	
0= NORMAL 1= TRIP	17-XST-M072-AOR DCS ESD SDI
0= 1=	
0= 1=	
0= 1=	
0= 1=	

DCS SOFTWARE

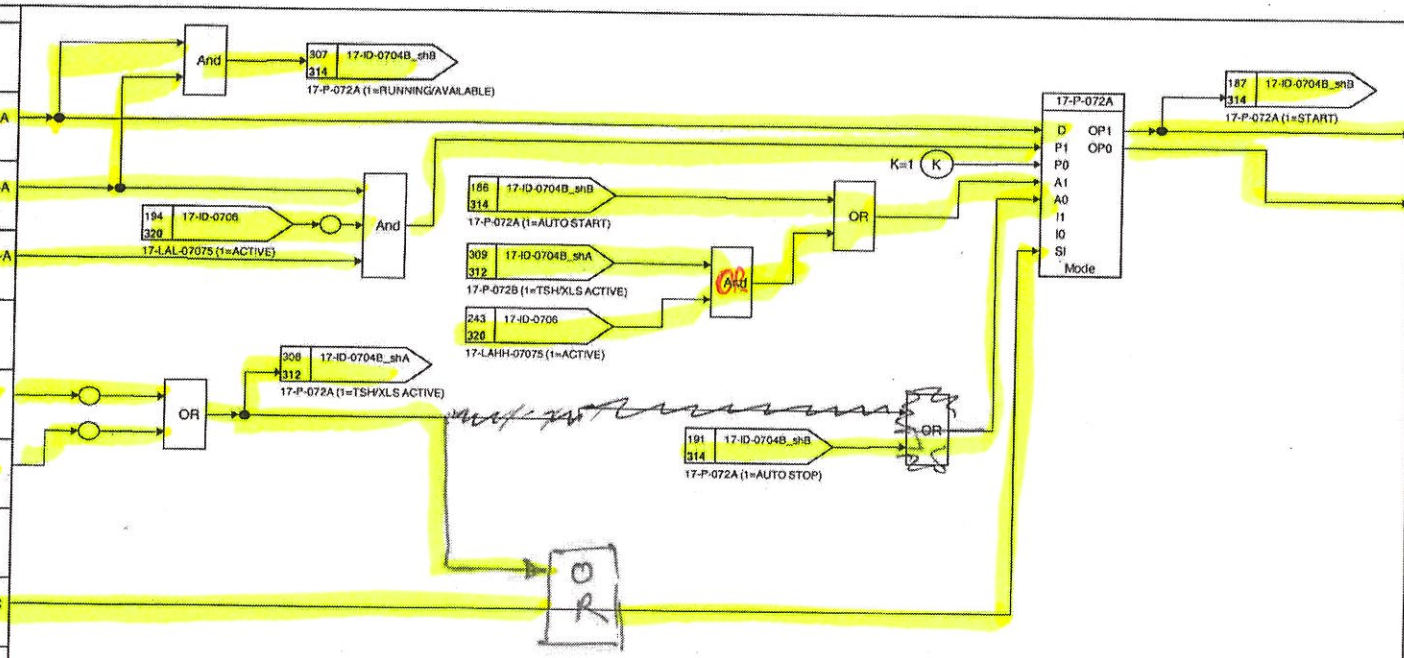

OUTPUT

TAG	Logic Status
	0= 1=
17-XYST -M072 -A MCC DO	0= NO ACTION 1= START
17-XYSP -M072 -A MCC DO	0= STOP 1= NO ACTION
	0= 1=
	0= 1=
	0= 1=
	0= 1=
	0= 1=
	0= 1=
	0= 1=
	0= 1=
	0= 1=
	0= 1=
	0= 1=

NOTE

FIRST START OF THE PUMP IS MANAGED BY OPERATOR THROUGH MANUAL START FROM FIELD. MAIN PUMP IS SELECTED BY OPERATOR WHEN 17-LAHH-07075 IS ACTIVATED. IN THIS OPERATING CONDITION CONTEMPORARY RUNNING OF DUTY AND STAND-BY PUMP IS ALLOWED.

P&ID:4124-XZ-DM-21707005

04.02.25 04.02.25 04.02.25 7/2/22 7/2/22 14.03.2022 Eurochem

EUROCHEM

Tecnimont

17-ID-0704B_shA WASTE WATER PUMPS (17-P-072B)

DCS LOGIC DIAGRAMS-AMMONIA UTILITIES

AMMONIA AND UREA PRODUCTION, KINGISEPP

3000 MTPD AMMONIA

TECNIMONT IDENTIFICATION CODE	
Document Number	Revision
4124-JK-DD-217000010	03
Sheet 312 next 314	
Sh.Rev. 01	
CUSTOMER IDENTIFICATION CODE	
	03

INPUT

Logic Status	TAG
0= 1=	
0= NOT RUNNING 1= RUNNING	17-XS -M072 -B MCC DI
0= NOT AVLB 1= AVAILABLE	17-XSA -M072 -B MCC DI
0= LOCAL 1= REMOTE	17-XSR -M072 -B MCC DI
0= 1=	
0= TRIP 1= NORMAL	XSL 17-XLS -M072B Field DI
0= TRIP 1= NORMAL	17-TSH -M072B Field DI
0= 1=	
0= NORMAL 1= TRIP	17-XST-M072-BOR DCS SOI ESD
0= 1=	
0= 1=	
0= 1=	
0= 1=	

DCS SOFTWARE

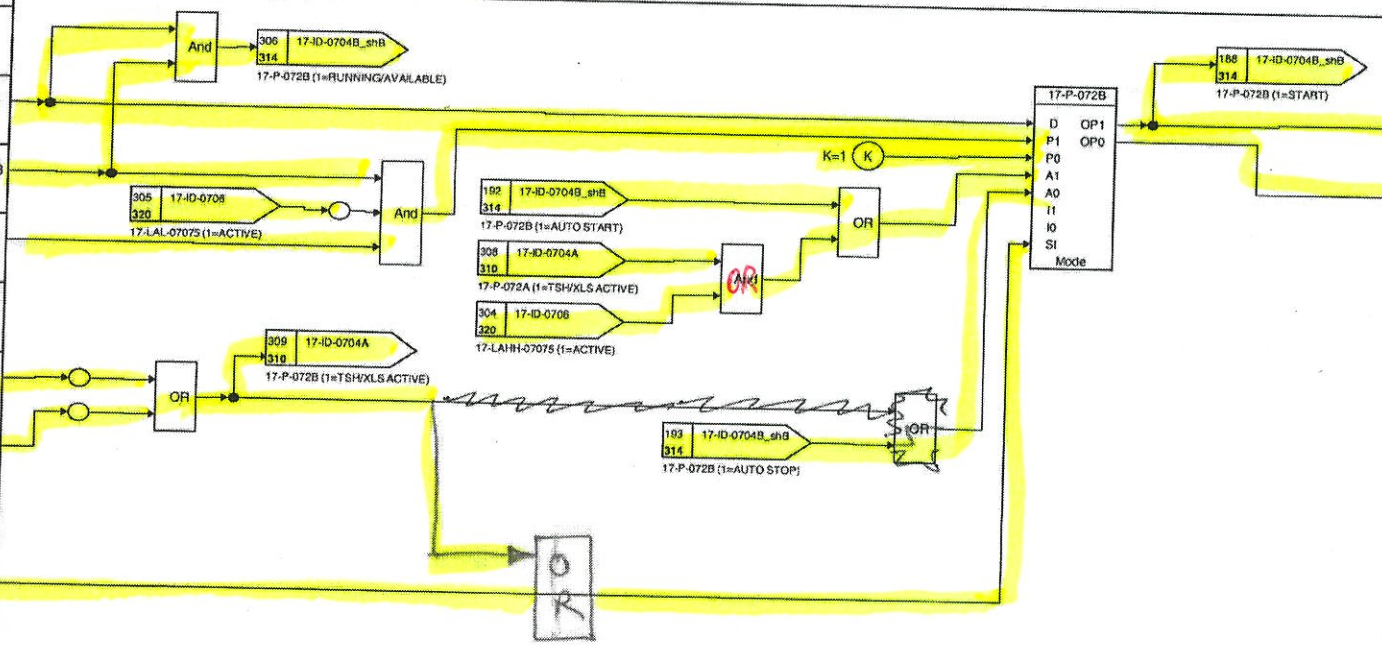

OUTPUT

TAG	Logic Status
	0= 1=
17-XYST -M072 -B MCC DO	0= NO ACTION 1= START
17-XYSP -M072 -B MCC DO	0= STOP 1= NO ACTION
	0= 1=
	0= 1=
	0= 1=
	0= 1=
	0= 1=
	0= 1=
	0= 1=
	0= 1=
	0= 1=
	0= 1=

NOTE

FIRST START OF THE PUMP IS MANAGED BY OPERATOR THROUGH MANUAL START FROM FIELD. MAIN PUMP IS SELECTED BY OPERATOR WHEN 17-LAHH-07075 IS ACTIVATED. IN THIS OPERATING CONDITION CONTEMPORARY RUNNING OF DUTY AND STAND-BY PUMP IS ALLOWED.

P&ID:4124-XZ-DM-21707005

04.02.25 04.02.25 PKC 04.02.25 7/2/22 7/2/22 17.02.2022

EUROCHEM

Tecnimont

17-ID-0704B_shB WASTE WATER PUMPS (17-P-072B)

DCS LOGIC DIAGRAMS-AMMONIA UTILITIES

AMMONIA AND UREA PRODUCTION, KINGISEPP

3000 MTPD AMMONIA

TECNIMONT IDENTIFICATION CODE	
Document Number	Revision
4124-JK-DD-217000010	03
Sheet 314 next 315	
Sh.Rev. 01	
CUSTOMER IDENTIFICATION CODE	
-	03

INPUT

Logic Status	TAG
0= 1=	
0= 1=	
0= 1=	
0= 1=	
0= 1=	
0= 1=	
0= 1=	
0= 1=	
0= 1=	
0= 1=	
0= 1=	
0= 1=	
0= 1=	
0= 1=	

DCS SOFTWARE

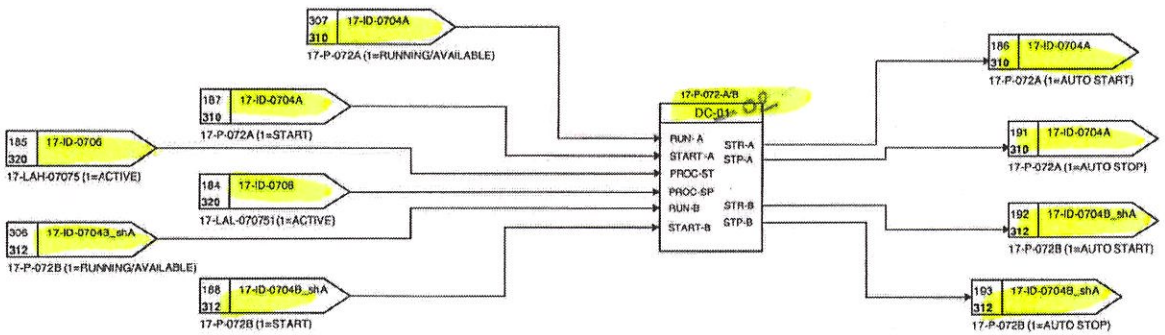

OUTPUT

TAG	Logic Status
	0= 1=
	0= 1=
	0= 1=
	0= 1=
	0= 1=
	0= 1=
	0= 1=
	0= 1=
	0= 1=
	0= 1=
	0= 1=
	0= 1=
	0= 1=
	0= 1=

PKC 04.02.25

04.02.25

04.02.25

7/2/22

7/2/22

17.02.2022

Eurochem

EUROCHEM

Tecnimont

17-ID-0705_shA SIDE STREAM FILTER PACKAGE

DCS LOGIC DIAGRAMS-AMMONIA UTILITIES

AMMONIA AND UREA PRODUCTION, KINGISEPP

3000 MTPD AMMONIA

TECNIMONT IDENTIFICATION CODE	
Document Number	Revision
4124-JK-DD-217000010	03
Sheet 315	next 318
Sh.Rev. 03	
CUSTOMER IDENTIFICATION CODE	
-	03

INPUT

Logic Status	TAG
0= 1=	
0= NOT RUNNING 1= RUNNING	17-XS -M072L-A MCC DI
0= LOCAL 1= REMOTE	17-XSR -M072L-A MCC DI
0= NOT AVLB 1= AVAILABLE	17-XSA -M072L-A MCC DI
0= 1=	
0= 1=	17-PDT -070174 Field AI
0= 1=	
0= 1=	
0= AUTO MOE 1= MAN MODE	17-HS -070175 DCS
0= NOT OPEN 1= OPEN	17-XZSH -07023 Field DI
0= NOT CLOSED 1= CLOSED	17-XZSL -07023 Field DI
0= 1=	
0= 1=	

DCS SOFTWARE

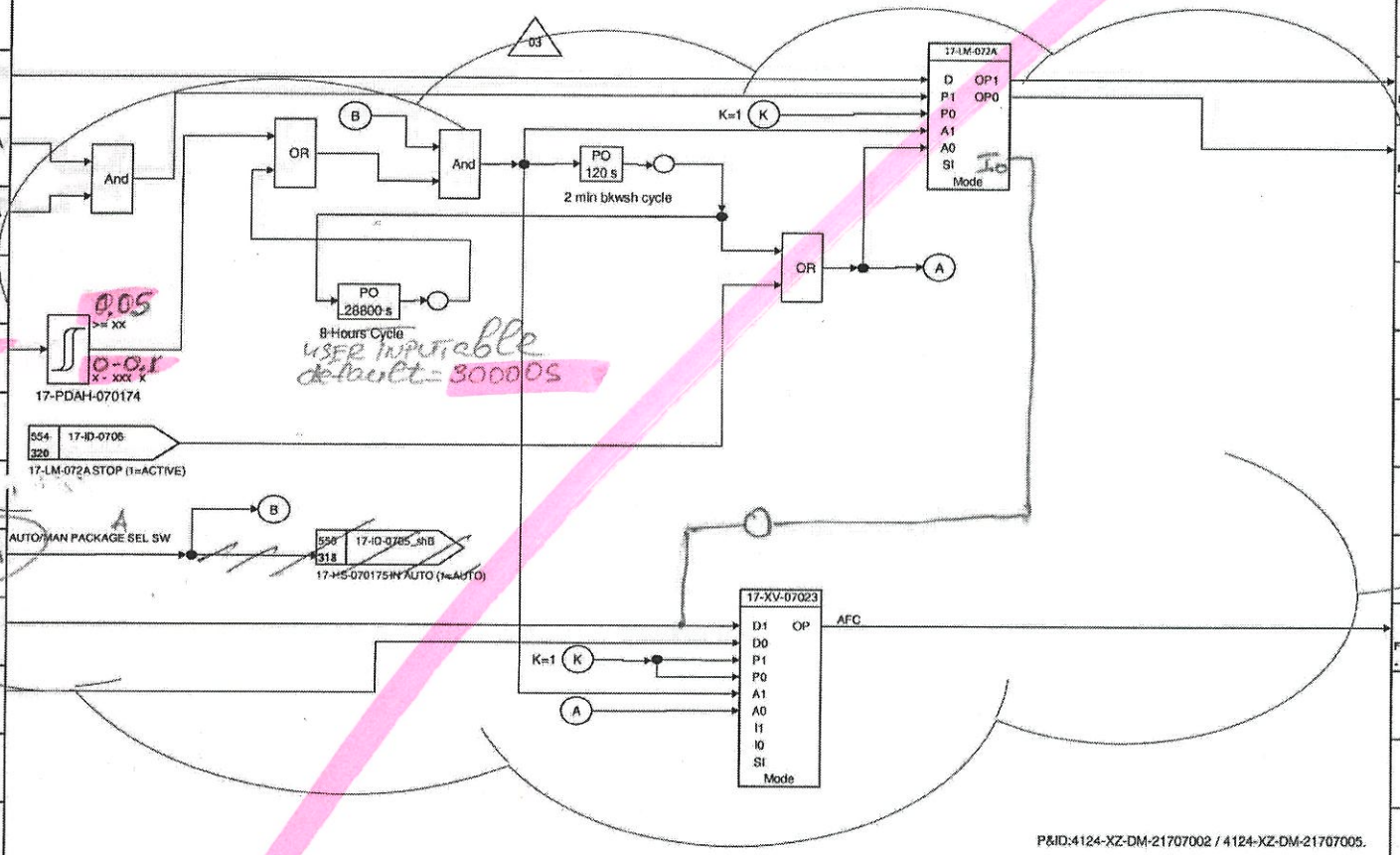

USER INPUT able default = 300005

OUTPUT

TAG	Logic Status
	0= 1=
17-XYST -M072L-A MCC DO	0= NO ACTION 1= START
17-XYSP -M072L-A MCC DO	0= STOP 1= NO ACTION
	0= 1=
	0= 1=
	0= 1=
	0= 1=
	0= 1=
	0= 1=
17-XY -07023 Field DO	0= CLOSE 1= OPEN
	0= 1=
	0= 1=
	0= 1=

Remove

MAN AUTO

21.02.26 FKC 21.02.26 21.02.26 7/2/22 7/2/22 17.02.2022 Eurochem

EUROCHEM

Tecnimont

17-ID-0705_shB SIDE STREAM FILTER PACKAGE

DCS LOGIC DIAGRAMS-AMMONIA UTILITIES

AMMONIA AND UREA PRODUCTION, KINGISEPP

3000 MTPD AMMONIA

TECNIMONT IDENTIFICATION CODE	
Document Number	Revision
4124-JK-DD-217000010	03
Sheet 318	next 320
Sh.Rev. 03	
CUSTOMER IDENTIFICATION CODE	
-	03

INPUT

Logic Status	TAG
0=MAN mode 1=AUT mode	17-HS-070175 B DCS
0= NOT RUNNING 1= RUNNING	17-XS -M072L-B MCC DI
0= LOCAL 1= REMOTE	17-XSR -M072L-B MCC DI
0= NOT AVLB 1= AVAILABLE	17-XSA -M072L-B MCC DI
0= 1=	
0= 1=	17-PDT -070173 Field AI
0= 1=	
0= 1=	
0= 1=	
0= NOT OPEN 1= OPEN	17-XZSH -07021 Field DI
0= NOT CLOSED 1= CLOSED	17-XZSL -07021 Field DI
0= 1=	
0= 1=	

DCS SOFTWARE

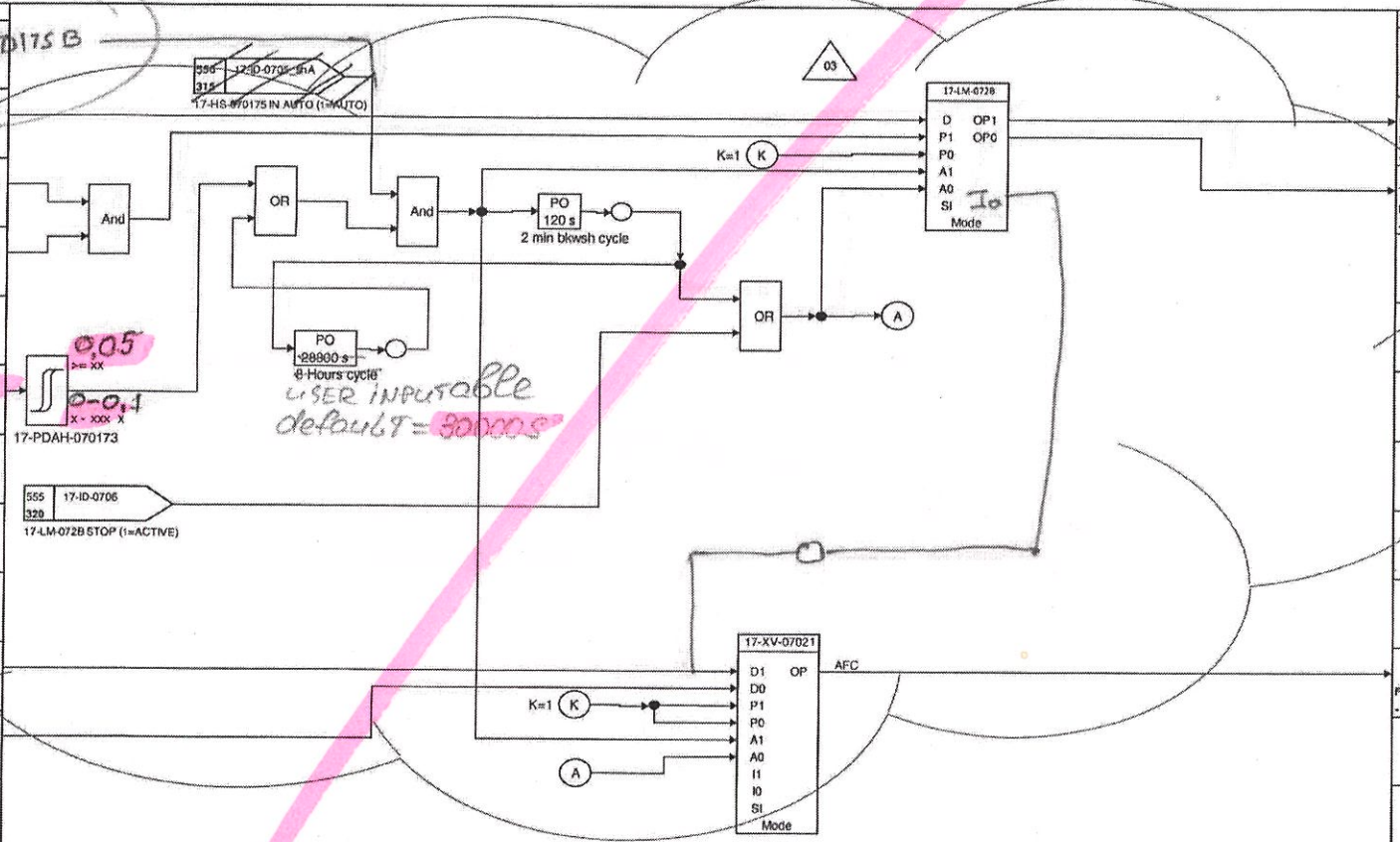

OUTPUT

TAG	Logic Status
	0= 1=
17-XYST -M072L-B MCC DO	0= NO ACTION 1= START
17-XYSP -M072L-B MCC DO	0= STOP 1= NO ACTION
	0= 1=
	0= 1=
	0= 1=
	0= 1=
	0= 1=
	0= 1=
17-XY -07021 Field DO	0= CLOSE 1= OPEN
	0= 1=
	0= 1=
	0= 1=

21.02.25 TKC 21.02.25 21.02.25 7/2/22 7/2/22 17.02.2022 Eurochem

EUROCHEM

Tecnimont

17-ID-0706 / 03

SIDE STREAM FILTER PACKAGES UNIT 17-L-072A/B
DCS LOGIC DIAGRAMS-AMMONIA UTILITIES
AMMONIA AND UREA PRODUCTION, KINGISEPP

3000 MTPD AMMONIA

TECNIMONT IDENTIFICATION CODE			
Document Number		Revision	
4124-JK-DD-217000010		03	
Sheet	320	next	321
Sh.Rev.	03		
CUSTOMER IDENTIFICATION CODE			
-		03	

INPUT | DCS SOFTWARE | OUTPUT

Logic Status	TAG
0= 1=	
0= 1=	
0= 1=	
0= 1=	17-LT -07075 Field AI
0= 1=	
0= 1=	
0= 1=	
0= 1=	
0= 1=	
0= 1=	
0= 1=	
0= 1=	
0= 1=	
0= 1=	

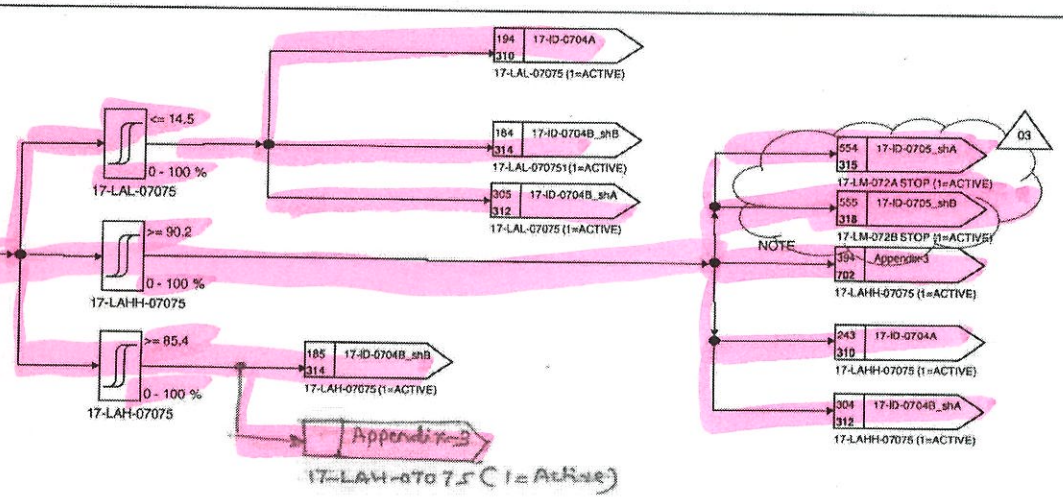

TAG	Logic Status
	0= 1=
	0= 1=
	0= 1=
	0= 1=
	0= 1=
	0= 1=
	0= 1=
	0= 1=
	0= 1=
	0= 1=
	0= 1=
	0= 1=
	0= 1=

NOTE
1 . WHEN THE INTERLOCK IS ACTIVESET CONTROLLER 17-FIC-07021 IN MAN MODE WITH O/P FORCED TO 100% TO KEEP IT CLOSED

21.02.25 FKC 21.02.25 21.02.25 8/2/22 7/2/22 17.02.2022 Eurochem

EUROCHEM

Tecnimont

17-ID-0722 START PERM FOR CT FAN 17-M-071LK-A

DCS LOGIC DIAGRAMS-AMMONIA UTILITIES

AMMONIA AND UREA PRODUCTION, KINGISEPP

3000 MTPD AMMONIA

TECNIMONT IDENTIFICATION CODE	
Document Number	Revision
4121-JK-DD-217000010	03
Sheet 321	next 322
Sh.Rev. 03	
CUSTOMER IDENTIFICATION CODE	
-	03

INPUT

Logic Status	TAG
0= 1=	
0= 1=	
0= 1=	
0= 1=	
0= 1=	
0= 1=	
0= 1=	
0= 1=	
0= 1=	
0= 1=	
0= 1=	
0= 1=	
0= 1=	

DCS SOFTWARE

03

CONDITION FOR START PERMISSIVE FOR 17-ID-0722 ARE PRESENT IN 17-ID-780A & ~~APPENDIX-8_SHA~~ 17-ID-0770A

OUTPUT

TAG	Logic Status
	0= 1=
	0= 1=
	0= 1=
	0= 1=
	0= 1=
	0= 1=
	0= 1=
	0= 1=
	0= 1=
	0= 1=
	0= 1=
	0= 1=
	0= 1=

11/2/22

17.02.2022

Eurochem

EUROCHEM

Tecnimont

17-ID-0723 START PERM FOR CT FAN 17-M-071LK-B

DCS LOGIC DIAGRAMS-AMMONIA UTILITIES

AMMONIA AND UREA PRODUCTION, KINGISEPP

3000 MTPD AMMONIA

TECNIMONT IDENTIFICATION CODE	
Document Number	Revision
4124-JK-DD-217000010	03
Sheet 322 next 323	
Sh.Rev. 03	
CUSTOMER IDENTIFICATION CODE	
-	03

INPUT

Logic Status	TAG
0= 1=	
0= 1=	
0= 1=	
0= 1=	
0= 1=	
0= 1=	
0= 1=	
0= 1=	
0= 1=	
0= 1=	
0= 1=	
0= 1=	
0= 1=	
0= 1=	
0= 1=	

DCS SOFTWARE

03

CONDITION FOR START PERMISSIVE FOR 17-ID-0723 ARE PRESENT IN 17-ID-780B & ~~APPENDIX-8_6HB~~ 17-ID-0770B

OUTPUT

TAG	Logic Status
	0= 1=
	0= 1=
	0= 1=
	0= 1=
	0= 1=
	0= 1=
	0= 1=
	0= 1=
	0= 1=
	0= 1=
	0= 1=
	0= 1=
	0= 1=
	0= 1=
	0= 1=

11/2/22

17.02.2022

Eurochem

EUROCHEM

Tecnimont

17-ID-0724 START PERM FOR CT FAN 17-M-071LK-C

DCS LOGIC DIAGRAMS-AMMONIA UTILITIES

AMMONIA AND UREA PRODUCTION, KINGISEPP

3000 MTPD AMMONIA

TECNIMONT IDENTIFICATION CODE	
Document Number	Revision
4124-JK-DD-217000010	03
Sheet 323 next 324	
Sh.Rev. 03	
CUSTOMER IDENTIFICATION CODE	
-	03

INPUT

Logic Status	TAG
0= 1=	
0= 1=	
0= 1=	
0= 1=	
0= 1=	
0= 1=	
0= 1=	
0= 1=	
0= 1=	
0= 1=	
0= 1=	
0= 1=	
0= 1=	
0= 1=	

DCS SOFTWARE

03

CONDITION FOR START PERMISSIVE FOR 17-ID-0724 ARE PRESENT IN 17-ID-780C & ~~APPENDIX-8_SHC~~ 17-ID-0770C

OUTPUT

TAG	Logic Status
	0= 1=
	0= 1=
	0= 1=
	0= 1=
	0= 1=
	0= 1=
	0= 1=
	0= 1=
	0= 1=
	0= 1=
	0= 1=
	0= 1=
	0= 1=
	0= 1=

17.02.2022

Eurochem

EUROCHEM	17-ID-0725 START PERM FOR CT FAN 17-M-071LK-D DCS LOGIC DIAGRAMS-AMMONIA UTILITIES AMMONIA AND UREA PRODUCTION, KINGISEPP	TECNIMONT IDENTIFICATION CODE Document Number: 4124-JK-DD-217000010 Revision: 03 Sheet 324 next 325 Sh.Rev. 03
Tecnimont	3000 MTPD AMMONIA	CUSTOMER IDENTIFICATION CODE - 03

INPUT

Logic Status	TAG
0= 1=	
0= 1=	
0= 1=	
0= 1=	
0= 1=	
0= 1=	
0= 1=	
0= 1=	
0= 1=	
0= 1=	
0= 1=	
0= 1=	
0= 1=	
0= 1=	

DCS SOFTWARE

03

CONDITION FOR START PERMISSIVE FOR 17-ID-0725 ARE PRESENT IN 17-ID-780D & ~~APPENDIX-8_SDB~~ 17-ID-0770D

OUTPUT

TAG	Logic Status
	0= 1=
	0= 1=
	0= 1=
	0= 1=
	0= 1=
	0= 1=
	0= 1=
	0= 1=
	0= 1=
	0= 1=
	0= 1=
	0= 1=
	0= 1=
	0= 1=

1/2/22

17.02.2022

EUROCHEM	17-ID-0726 START PERM FOR CT FAN 17-M-071LK-E DCS LOGIC DIAGRAMS-AMMONIA UTILITIES AMMONIA AND UREA PRODUCTION, KINGISEPP	TECNIMONT IDENTIFICATION CODE Document Number: 4124-JK-DD-217000010 — Revision: 03 Sheet 325 next 326 Sh.Rev. 03
Tecnimont	3000 MTPD AMMONIA	CUSTOMER IDENTIFICATION CODE - 03

INPUT		DCS SOFTWARE	OUTPUT	
Logic Status	TAG		TAG	Logic Status
0= 1=				0= 1=
0= 1=				0= 1=
0= 1=				0= 1=
0= 1=				0= 1=
0= 1=				0= 1=
0= 1=				0= 1=
0= 1=				0= 1=
0= 1=				0= 1=
0= 1=				0= 1=
0= 1=				0= 1=
0= 1=				0= 1=
0= 1=				0= 1=
0= 1=				0= 1=
0= 1=				0= 1=

03

CONDITION FOR START PERMISSIVE FOR 17-ID-0726
ARE PRESENT IN 17-ID-780E & ~~APPENDIX-8_SHE~~
17-ID-0770E

17.02.2022

EUROCHEM

Tecnimont

17-ID-0727 START PERM FOR CT FAN 17-M-071LK-F

DCS LOGIC DIAGRAMS-AMMONIA UTILITIES

AMMONIA AND UREA PRODUCTION, KINGISEPP

3000 MTPD AMMONIA

TECNIMONT IDENTIFICATION CODE	
Document Number	Revision
4124-JK-DD-217000010	03
Sheet 326 next 327	
Sh.Rev. 03	
CUSTOMER IDENTIFICATION CODE	
	03

INPUT

Logic Status	TAG
0= 1=	
0= 1=	
0= 1=	
0= 1=	
0= 1=	
0= 1=	
0= 1=	
0= 1=	
0= 1=	
0= 1=	
0= 1=	
0= 1=	
0= 1=	
0= 1=	

DCS SOFTWARE

03

CONDITION FOR START PERMISSIVE FOR 17-ID-0727 ARE PRESENT IN 17-ID-780F & ~~APPENDIX-8_SHF~~ 17-ID-0770F

OUTPUT

TAG	Logic Status
	0= 1=
	0= 1=
	0= 1=
	0= 1=
	0= 1=
	0= 1=
	0= 1=
	0= 1=
	0= 1=
	0= 1=
	0= 1=
	0= 1=
	0= 1=
	0= 1=

1/2/22

17.02.2022

Eurochem

EUROCHEM

Tecnimont

17-ID-0728 START PERM FOR CT FAN 17-M-071LK-G

DCS LOGIC DIAGRAMS-AMMONIA UTILITIES

AMMONIA AND UREA PRODUCTION, KINGISEPP

3000 MTPD AMMONIA

TECNIMONT IDENTIFICATION CODE	
Document Number	Revision
4124-JK-DD-217000010	03
Sheet 327	next 328
Sh.Rev. 03	
CUSTOMER IDENTIFICATION CODE	
	03

INPUT

Logic Status	TAG
0= 1=	
0= 1=	
0= 1=	
0= 1=	
0= 1=	
0= 1=	
0= 1=	
0= 1=	
0= 1=	
0= 1=	
0= 1=	
0= 1=	
0= 1=	
0= 1=	

DCS SOFTWARE

03

CONDITION FOR START PERMISSIVE FOR 17-ID-0728 ARE PRESENT IN 17-ID-780G & ~~APPENDIX-8_SHG~~ 17-LD-0770G

OUTPUT

TAG	Logic Status
	0= 1=
	0= 1=
	0= 1=
	0= 1=
	0= 1=
	0= 1=
	0= 1=
	0= 1=
	0= 1=
	0= 1=
	0= 1=
	0= 1=
	0= 1=
	0= 1=

11/2/22

11.02.2022

Eurochem

EUROCHEM

Tecnimont

17-ID-0729 START PERM FOR CT FAN 17-M-071LK-H

DCS LOGIC DIAGRAMS-AMMONIA UTILITIES

AMMONIA AND UREA PRODUCTION, KINGISEPP

3000 MTPD AMMONIA

TECNIMONT IDENTIFICATION CODE	
Document Number	Revision
4124-JK-DD-217000010	03
Sheet 328 next 330	
Sh.Rev. 03	
CUSTOMER IDENTIFICATION CODE	
-	03

INPUT

Logic Status	TAG
0= 1=	
0= 1=	
0= 1=	
0= 1=	
0= 1=	
0= 1=	
0= 1=	
0= 1=	
0= 1=	
0= 1=	
0= 1=	
0= 1=	
0= 1=	
0= 1=	
0= 1=	

DCS SOFTWARE

03

CONDITION FOR START PERMISSIVE FOR 17-ID-0729 ARE PRESENT IN 17-ID-780H ~~& APPENDIX-8 sh1~~ 17-ID-0770H

OUTPUT

TAG	Logic Status
	0= 1=
	0= 1=
	0= 1=
	0= 1=
	0= 1=
	0= 1=
	0= 1=
	0= 1=
	0= 1=
	0= 1=
	0= 1=
	0= 1=
	0= 1=
	0= 1=

11/2/22

17.02.2022

Eurochem

EUROCHEM

Tecnimont

17-ID-0730_shA INJECTION SYSTEM PH CONTROL

DCS LOGIC DIAGRAMS-AMMONIA UTILITIES

AMMONIA AND UREA PRODUCTION, KINGISEPP

3000 MTPD AMMONIA

TECNIMONT IDENTIFICATION CODE	
Document Number	Revision
4124-JK-DD-217000010	03
Sheet 330	next 332
Sh.Rev. 02	
CUSTOMER IDENTIFICATION CODE	
-	03

INPUT

Logic Status	TAG
0= 1=	
0= NOT RUNNING 1= RUNNING	17-XS -M071LP-A MCC DI
0= LOCAL 1= REMOTE	17-XSR -M071LP-A MCC DI
0= NOT AVLB 1= AVAILABLE	17-XSA -M071LP-A MCC DI
0= 1=	17-AT -07003PH Field AI
0= 1=	
0= 1=	
0= NOT RUNNING 1= RUNNING	17-XS -M071LP-B MCC DI
0= LOCAL 1= REMOTE	17-XSR -M071LP-B MCC DI
0= NOT AVLB 1= AVAILABLE	17-XSA -M071LP-B MCC DI
0= 1=	
0= 1=	17-LT -07061 Field AI
0= 1=	

DCS SOFTWARE

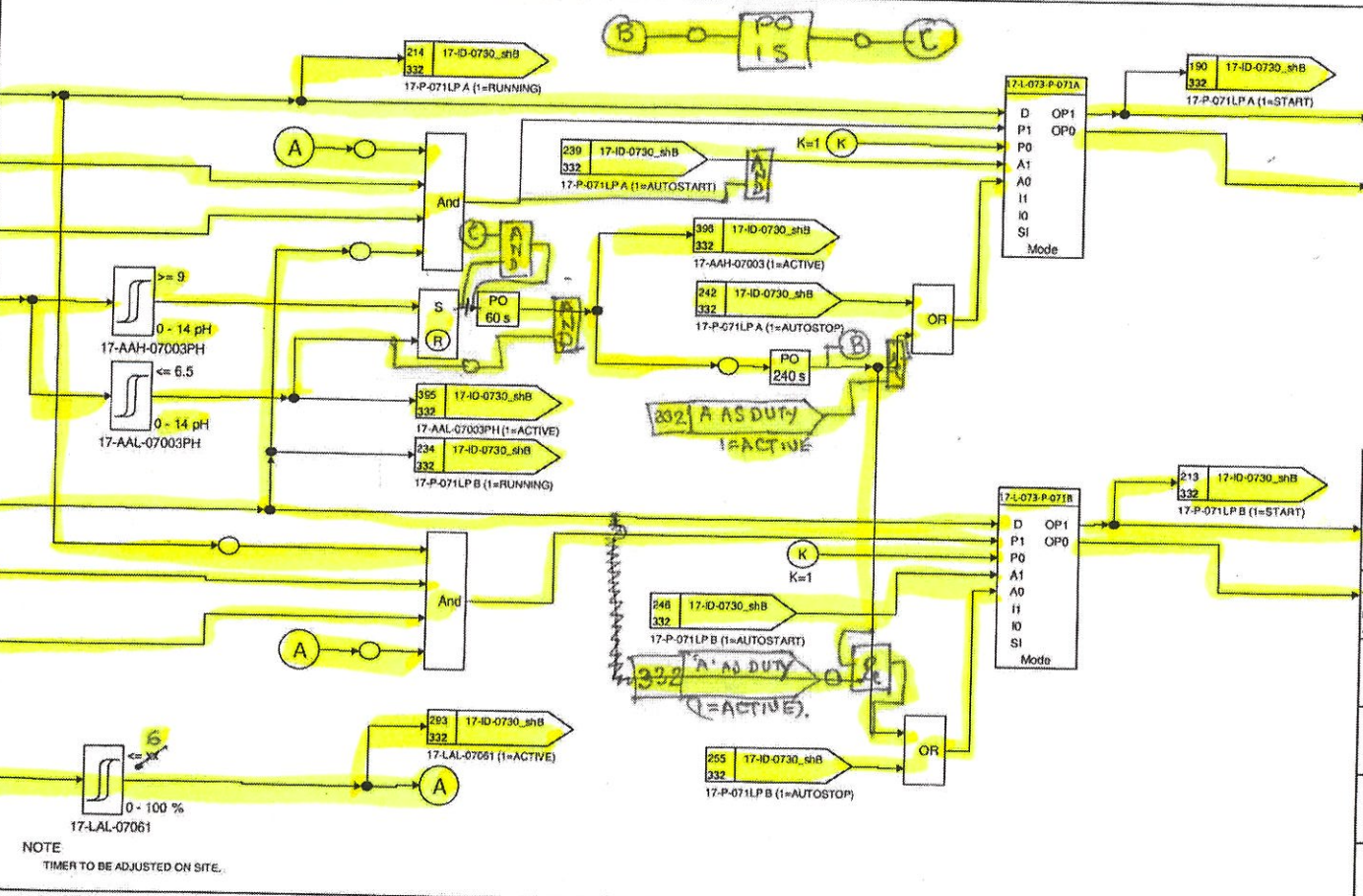

NOTE

TIMER TO BE ADJUSTED ON SITE.

OUTPUT

TAG	Logic Status
	0= 1=
17-XYST-M071LP-A MCC DO	0= NO ACTION 1= START
17-XYSP-M071LP-A MCC DO	0= STOP 1= NO ACTION
	0= 1=
17-XYST-M071LP-B MCC DO	0= NO ACTION 1= START
17-XYSP-M071LP-B MCC DO	0= STOP 1= NO ACTION
	0= 1=
	0= 1=
	0= 1=
	0= 1=

30.01.25

30.01.25 ПКС 30.01.25

25/2/2022

22.02.2022

EUROCHEM

Tecnimont

17-ID-0730_shB INJECTION SYSTEM PH CONTROL

DCS LOGIC DIAGRAMS-AMMONIA UTILITIES

AMMONIA AND UREA PRODUCTION, KINGISEPP

3000 MTPD AMMONIA

TECNIMONT IDENTIFICATION CODE	
Document Number	Revision
4124-JK-DD-217000010	03
Sheet 332	next 340
Sh.Rev. 02	
CUSTOMER IDENTIFICATION CODE	
-	03

INPUT

Logic Status	TAG
0= 1=	
0= 1=	
0= 1=	
0= 1=	
0= 1=	
0= 1=	
0= 1=	
0= 1=	
0= 1=	
0= 1=	
0= 1=	
0= 1=	
0= 1=	
0= 1=	

DCS SOFTWARE

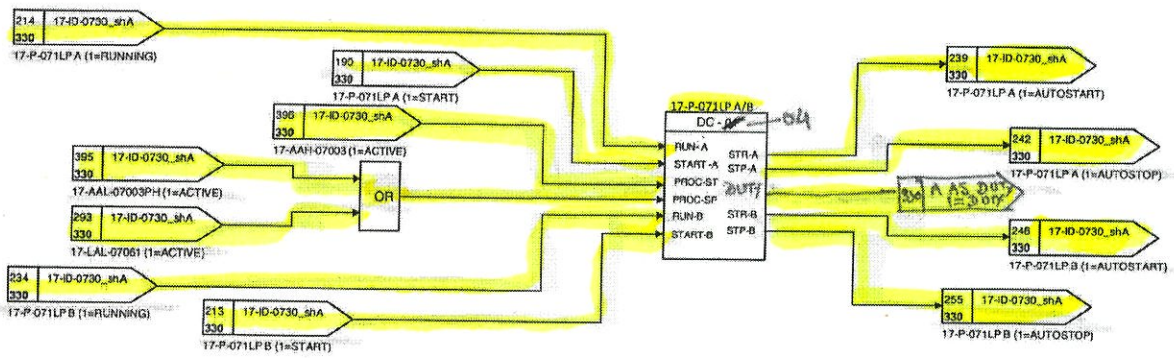

OUTPUT

TAG	Logic Status
	0= 1=
	0= 1=
	0= 1=
	0= 1=
	0= 1=
	0= 1=
	0= 1=
	0= 1=
	0= 1=
	0= 1=
	0= 1=
	0= 1=
	0= 1=
	0= 1=

30.01.25

30.01.25

PLC 30.01.25

8/9/2022 4/2/22

22.02.2022

EUROCHEM

Tecnimont

17-ID-0731_shA INJECTION SYSTEM CORROSION INHIBITOR

DCS LOGIC DIAGRAMS-AMMONIA UTILITIES

AMMONIA AND UREA PRODUCTION, KINGISEPP

3000 MTPD AMMONIA

TECNIMONT IDENTIFICATION CODE	
Document Number	Revision
4124-JK-DD-217000010	03
Sheet 340	next 342
Sh.Rev. 02	
CUSTOMER IDENTIFICATION CODE	
-	03

INPUT

Logic Status	TAG
0= 1=	
0= NOT RUNNING 1= RUNNING	17-XS -M072LP-A MCC DI -
0= LOCAL 1= REMOTE	17-XSR -M072LP-A MCC DI -
0= NOT AVLB 1= AVAILABLE	17-XSA -M072LP-A MCC DI -
0= 1=	
0= 1=	
0= 1=	
0= NOT RUNNING 1= RUNNING	17-XS -M072LP-B MCC DI -
0= LOCAL 1= REMOTE	17-XSR -M072LP-B MCC DI -
0= NOT AVLB 1= AVAILABLE	17-XSA -M072LP-B MCC DI -
0= 1=	
0= 1=	
0= 1=	17-LT -07062 Field AI -

DCS SOFTWARE

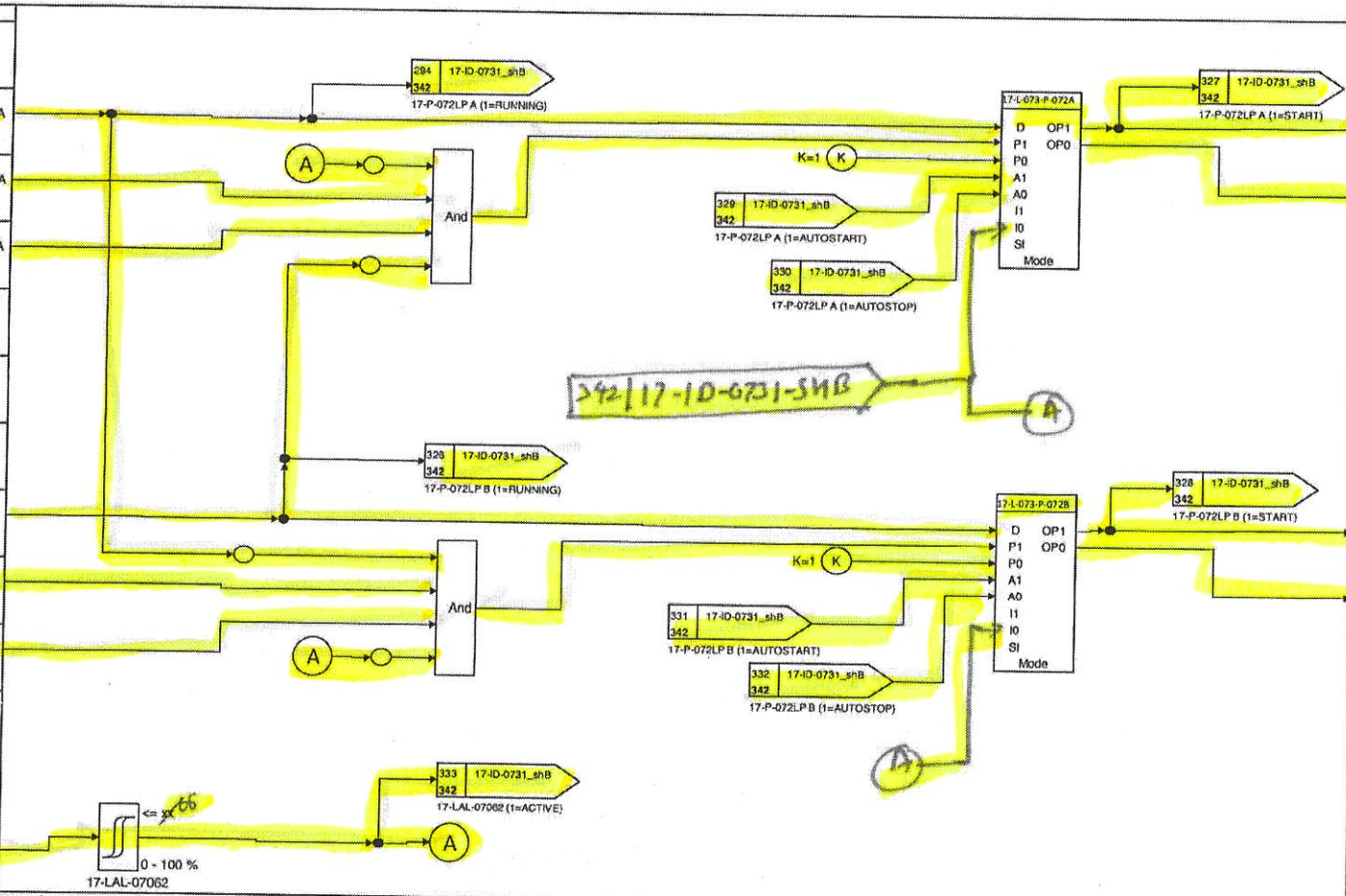

OUTPUT

TAG	Logic Status
	0= 1=
17-XYST-M072LP-A MCC DO -	0= NO ACTION 1= START
17-XYSP-M072LP-A MCC DO -	0= STOP 1= NO ACTION
	0= 1=
	0= 1=
	0= 1=
	0= 1=
17-XYST-M072LP-B MCC DO -	0= NO ACTION 1= START
17-XYSP-M072LP-B MCC DO -	0= STOP 1= NO ACTION
	0= 1=
	0= 1=
	0= 1=
	0= 1=

29.01.25

29.01.25

29.01.25

4/2/22

4/2/22

04.02.2022

EUROCHEM

Tecnimont

17-ID-0731_shB INJECTION SYSTEM CORROSION INHIBITOR
DCS LOGIC DIAGRAMS-AMMONIA UTILITIES
AMMONIA AND UREA PRODUCTION, KINGISEPP

3000 MTPD AMMONIA

TECNIMONT IDENTIFICATION CODE	
Document Number	Revision
4124-JK-DD-217000010	03
Sheet 342 next 350	
Sh.Rev. 02	
CUSTOMER IDENTIFICATION CODE	
-	03

INPUT

Logic Status	TAG
0= 1=	
0= 1=	
0= 1=	
0= 1=	
0= 1=	
0= 1=	
0= 1=	
0= 1=	
0= 1=	
0= 1=	
0= 1=	
0= 1=	
0= 1=	

DCS SOFTWARE

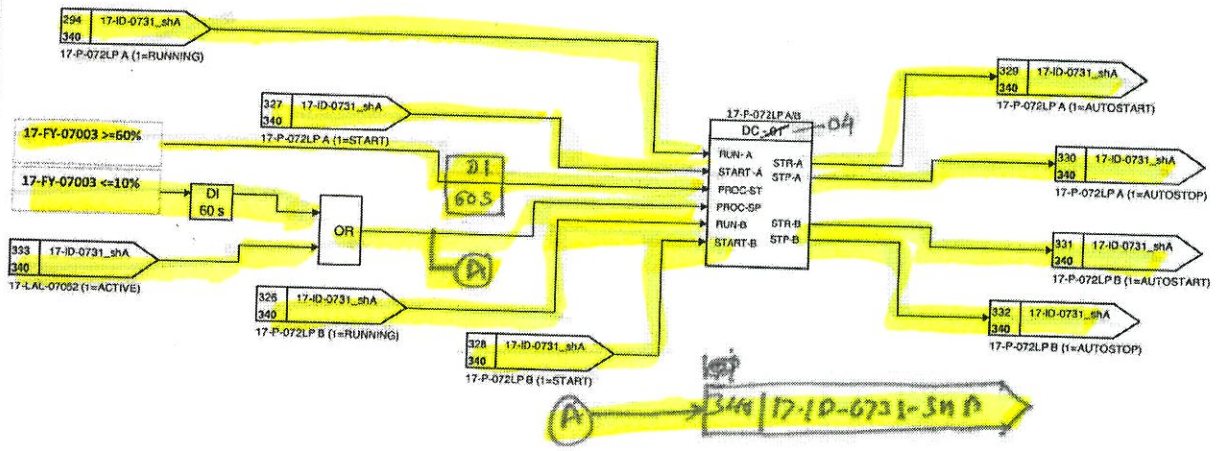

OUTPUT

TAG	Logic Status
	0= 1=
	0= 1=
	0= 1=
	0= 1=
	0= 1=
	0= 1=
	0= 1=
	0= 1=
	0= 1=
	0= 1=
	0= 1=
	0= 1=
	0= 1=

Note! - Pump start/stop based on schedule ON/OFF tested during FAT - не проверено

29.01.25 ПКС 29.01.25 29.01.25 4/2/22 4.2.22 04.02.22

Eurochem

EUROCHEM

Tecnimont

17-ID-0732_shA INJECTION SYSTEM DISPERSANT

DCS LOGIC DIAGRAMS-AMMONIA UTILITIES

AMMONIA AND UREA PRODUCTION, KINGISEPP

3000 MTPD AMMONIA

TECNIMONT IDENTIFICATION CODE	
Document Number	Revision
4124-JK-DD-217000010	03
Sheet 350	next 352
Sh.Rev. 02	
CUSTOMER IDENTIFICATION CODE	
	03

INPUT

Logic Status	TAG
0= 1=	
0= NOT RUNNING 1= RUNNING	17-XS -M073LP-A MCC DI -
0= LOCAL 1= REMOTE	17-XSR -M073LP-A MCC DI -
0= NOT AVLB 1= AVAILABLE	17-XSA -M073LP-A MCC DI -
0= 1=	
0= 1=	
0= 1=	
0= NOT RUNNING 1= RUNNING	17-XS -M073LP-B MCC DI -
0= LOCAL 1= REMOTE	17-XSR -M073LP-B MCC DI -
0= NOT AVLB 1= AVAILABLE	17-XSA -M073LP-B MCC DI -
0= 1=	
0= 1=	
0= 1=	17-LT -07063 Field AI -

DCS SOFTWARE

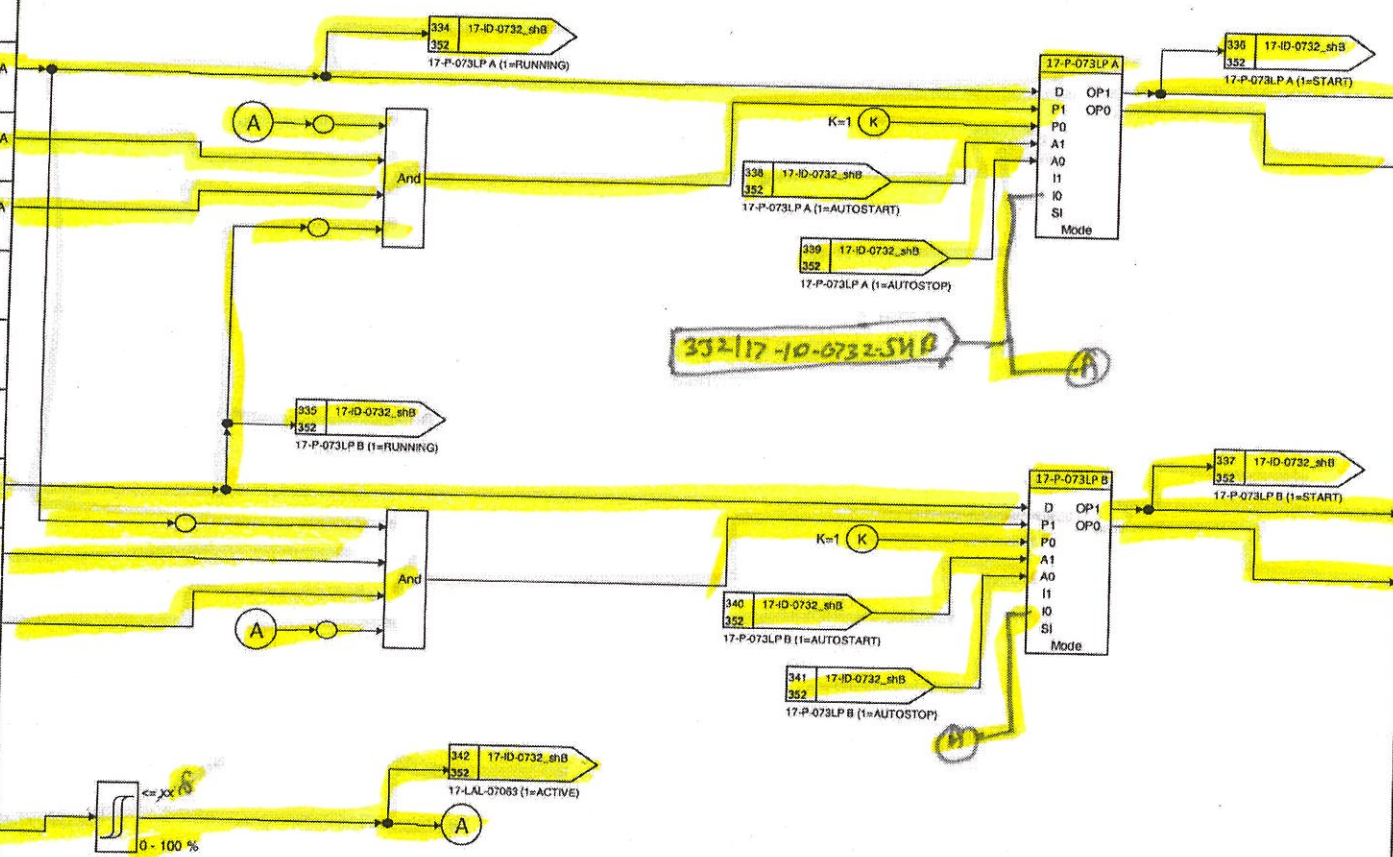

OUTPUT

TAG	Logic Status
	0= 1=
17-XYST-M073LP-A MCC DO -	0= NO ACTION 1= START
17-XYSP-M073LP-A MCC DO -	0= STOP 1= NO ACTION
	0= 1=
	0= 1=
	0= 1=
	0= 1=
17-XYST-M073LP-B MCC DO -	0= NO ACTION 1= START
17-XYSP-M073LP-B MCC DO -	0= STOP 1= NO ACTION
	0= 1=
	0= 1=
	0= 1=
	0= 1=

28.01.25 ПКС 28.01.25 28.01.25 4/2/22 4.02.2022 04.02.2022 Eurochem

EUROCHEM

Tecnimont

17-ID-0732_shB INJECTION SYSTEM DISPERSANT

DCS LOGIC DIAGRAMS-AMMONIA UTILITIES

AMMONIA AND UREA PRODUCTION, KINGISEPP

3000 MTPD AMMONIA

TECNIMONT IDENTIFICATION CODE	
Document Number	Revision
4124-JK-DD-217000010	03
Sheet 352 next 360	
Sh.Rev. 02	
CUSTOMER IDENTIFICATION CODE	
	03

INPUT

Logic Status	TAG
0= 1=	
0= 1=	
0= 1=	
0= 1=	
0= 1=	
0= 1=	
0= 1=	
0= 1=	
0= 1=	
0= 1=	
0= 1=	
0= 1=	
0= 1=	
0= 1=	

DCS SOFTWARE

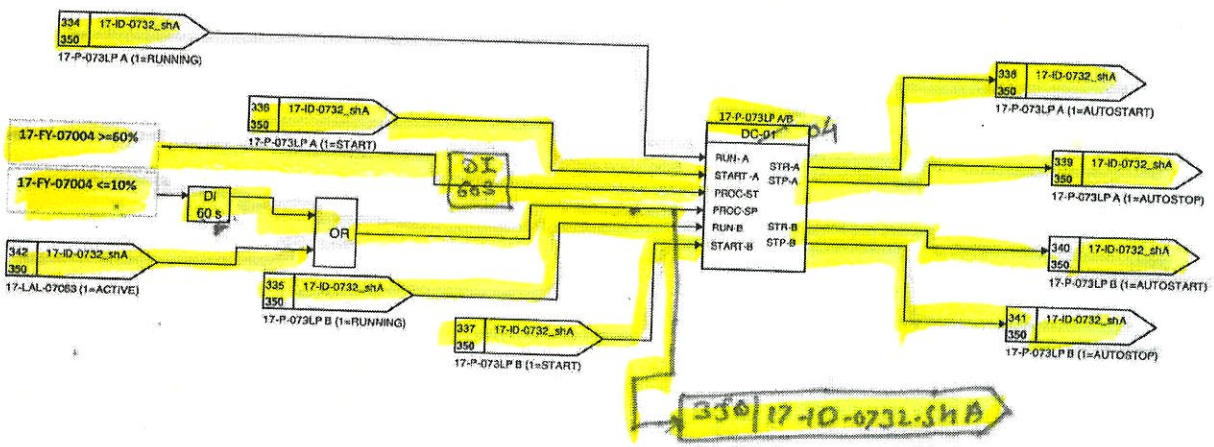

Note- Pump start/stop based on schedule ON/OFF tested during FAT.

не проверено

OUTPUT

TAG	Logic Status
	0= 1=
	0= 1=
	0= 1=
	0= 1=
	0= 1=
	0= 1=
	0= 1=
	0= 1=
	0= 1=
	0= 1=
	0= 1=
	0= 1=
	0= 1=
	0= 1=

28.01.25

28.01.25

28.01.25

4/2/22

4.02.2022

04.02.2022

Eurochem

EUROCHEM

Tecnimont

17-ID-0733_shA INJECTION SYSTEM NON OXIDANT BIOCIDE 1

DCS LOGIC DIAGRAMS-AMMONIA UTILITIES

AMMONIA AND UREA PRODUCTION, KINGISEPP

3000 MTPD AMMONIA

TECNIMONT IDENTIFICATION CODE	
Document Number	Revision
4124-JK-DD-217000010	03
Sheet 360 next 362	
Sh.Rev. 02	
CUSTOMER IDENTIFICATION CODE	
	03

INPUT

Logic Status	TAG
0= 1=	
0= NOT RUNNING 1= RUNNING	17-XS -M074LP-A MCC DI
0= LOCAL 1= REMOTE	17-XSR -M074LP-A MCC DI
0= NOT AVLB 1= AVAILABLE	17-XSA -M074LP-A MCC DI
0= 1=	
0= 1=	
0= 1=	
0= NOT RUNNING 1= RUNNING	17-XS -M074LP-B MCC DI
0= LOCAL 1= REMOTE	17-XSR -M074LP-B MCC DI
0= NOT AVLB 1= AVAILABLE	17-XSA -M074LP-B MCC DI
0= 1=	
0= 1=	
0= 1=	17-LT -07064 Field AI

DCS SOFTWARE

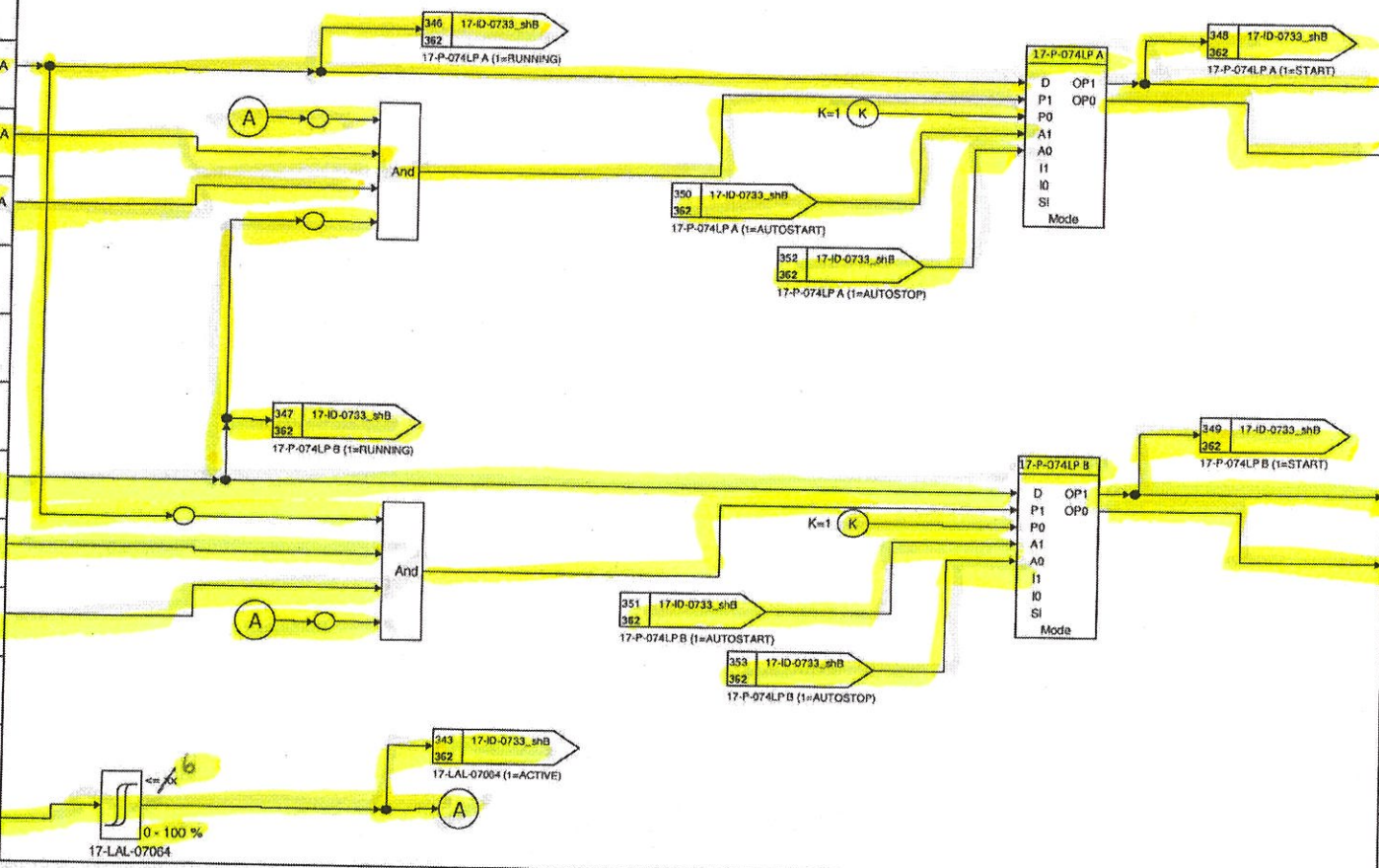

OUTPUT

TAG	Logic Status
	0= 1=
17-XYST-M074LP-A MCC DO	0= NO ACTION 1= START
17-XYSP-M074LP-A MCC DO	0= STOP 1= NO ACTION
	0= 1=
	0= 1=
	0= 1=
	0= 1=
17-XYST-M074LP-B MCC DO	0= NO ACTION 1= START
17-XYSP-M074LP-B MCC DO	0= STOP 1= NO ACTION
	0= 1=
	0= 1=
	0= 1=
	0= 1=

30.01.25

TCC 30-01-25

30.01.25

4/2/22

4.2.22

04.02.2022

Eurochem

EUROCHEM

Tecnimont

17-ID-0733_shB INJECTION SYSTEM NON OXIDANT BIOCIDE 1

DCS LOGIC DIAGRAMS-AMMONIA UTILITIES

AMMONIA AND UREA PRODUCTION, KINGISEPP

3000 MTPD AMMONIA

TECNIMONT IDENTIFICATION CODE	
Document Number	Revision
4124-JK-DD-217000010	03
Sheet 362 next 370	
Sh.Rev. 02	
CUSTOMER IDENTIFICATION CODE	
	03

INPUT

Logic Status	TAG
0= 1=	
0= 1=	
0= 1=	
0= 1=	
0= 1=	
0= 1=	
0= 1=	
0= 1=	
0= 1=	
0= 1=	
0= 1=	
0= 1=	
0= 1=	
0= 1=	

DCS SOFTWARE

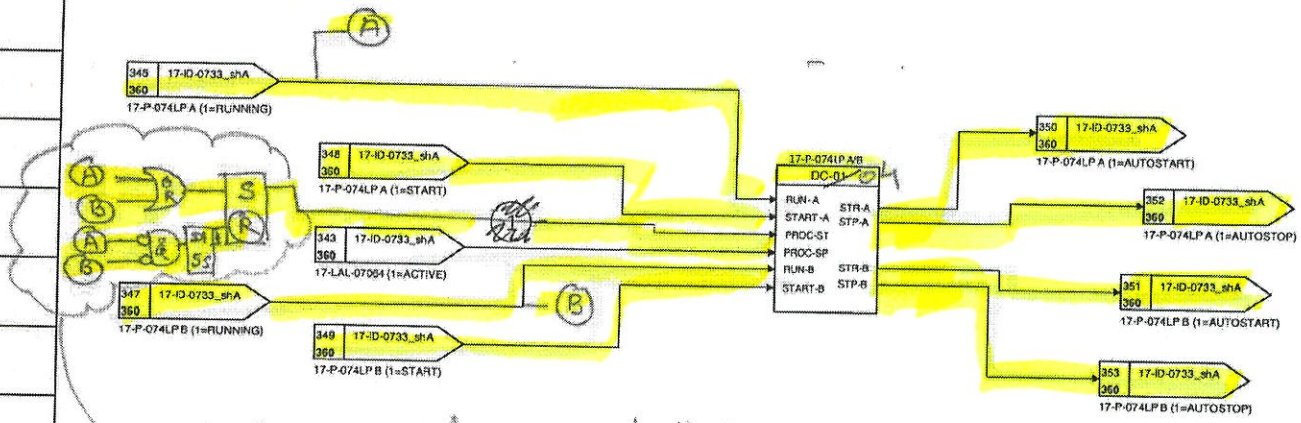

Added to avoid. repeatative duty/standby switchover more than 1 time.

OUTPUT

TAG	Logic Status
	0= 1=
	0= 1=
	0= 1=
	0= 1=
	0= 1=
	0= 1=
	0= 1=
	0= 1=
	0= 1=
	0= 1=
	0= 1=
	0= 1=
	0= 1=
	0= 1=

30.01.25

TKC 30.01.25

30.01.25

4/2/22

4/2/22

04.02.2022

Eurochem

EUROCHEM

Tecnimont

17-ID-0734_shA INJECTION SYSTEM CHLORINE ENHANCER
DCS LOGIC DIAGRAMS-AMMONIA UTILITIES
AMMONIA AND UREA PRODUCTION, KINGISEPP

3000 MTPD AMMONIA

TECNIMONT IDENTIFICATION CODE	
Document Number	Revision
4124-JK-DD-217000010	03
Sheet 370 next 372	
Sh.Rev. 02	
CUSTOMER IDENTIFICATION CODE	
-	03

INPUT

Logic Status	TAG
0= 1=	
0= NOT RUNNING 1= RUNNING	17-XS -M075LP-A MCC DI -
0= LOCAL 1= REMOTE	17-XSR -M075LP-A MCC DI -
0= NOT AVLB 1= AVAILABLE	17-XSA -M075LP-A MCC DI -
0= 1=	
0= 1=	
0= 1=	
0= NOT RUNNING 1= RUNNING	17-XS -M075LP-B MCC DI -
0= LOCAL 1= REMOTE	17-XSR -M075LP-B MCC DI -
0= NOT AVLB 1= AVAILABLE	17-XSA -M075LP-B MCC DI -
0= 1=	
0= 1=	
0= 1=	17-LT -07065 Field AI -

DCS SOFTWARE

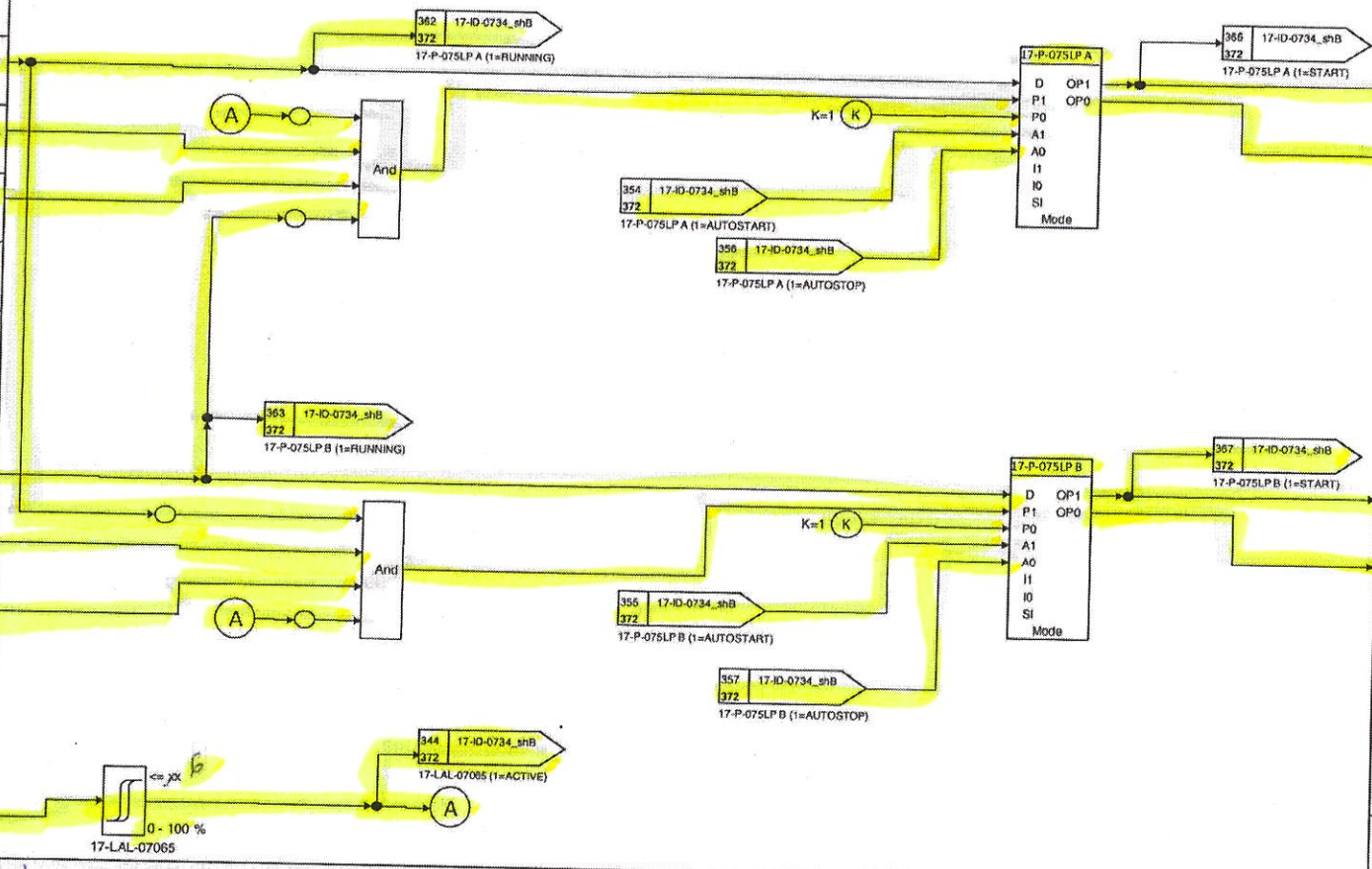

OUTPUT

TAG	Logic Status
	0= 1=
17-XYST-M075LP-A MCC DO -	0= NO ACTION 1= START
17-XYSP-M075LP-A MCC DO -	0= STOP 1= NO ACTION
	0= 1=
	0= 1=
	0= 1=
	0= 1=
17-XYST-M075LP-B MCC DO -	0= NO ACTION 1= START
17-XYSP-M075LP-B MCC DO -	0= STOP 1= NO ACTION
	0= 1=
	0= 1=
	0= 1=
	0= 1=

30.01.25 MKC 30.01.25 30.01.25 4/2/22 4/2/22 04.02.22 Eurochem

EUROCHEM

Tecnimont

17-ID-0734_shB INJECTION SYSTEM CHLORINE ENHANCER

DCS LOGIC DIAGRAMS-AMMONIA UTILITIES

AMMONIA AND UREA PRODUCTION, KINGISEPP

3000 MTPD AMMONIA

TECNIMONT IDENTIFICATION CODE	
Document Number	Revision
4124-JK-DD-217000010	03
Sheet 372 next 380	
Sh.Rev. 02	
CUSTOMER IDENTIFICATION CODE	
-	03

INPUT

Logic Status	TAG
0= 1=	
0= 1=	
0= 1=	
0= 1=	
0= 1=	
0= 1=	
0= 1=	
0= 1=	
0= 1=	
0= 1=	
0= 1=	
0= 1=	
0= 1=	
0= 1=	

DCS SOFTWARE

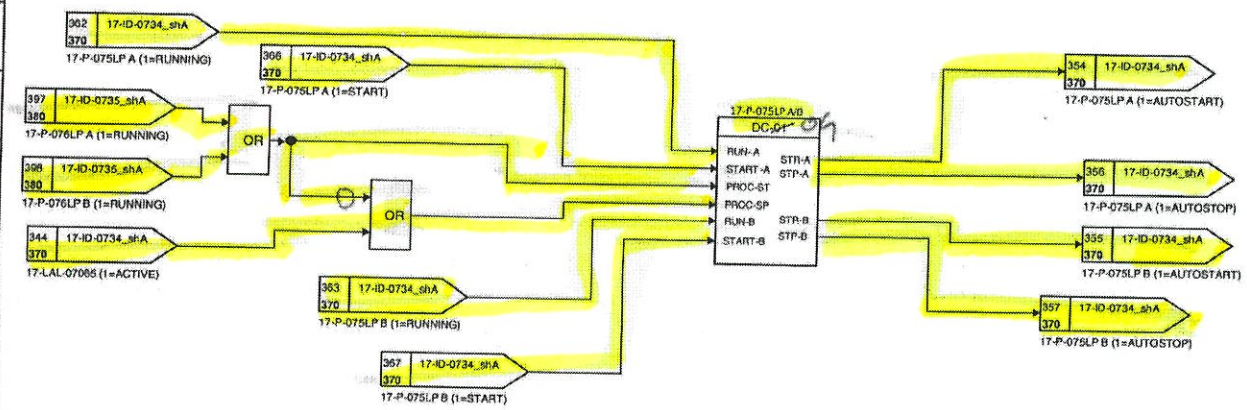

OUTPUT

TAG	Logic Status
	0= 1=
	0= 1=
	0= 1=
	0= 1=
	0= 1=
	0= 1=
	0= 1=
	0= 1=
	0= 1=
	0= 1=
	0= 1=
	0= 1=
	0= 1=
	0= 1=

30.01.25

PKC 30.01.25

30.01.25

4/2/22

4/02/22

04.02.22

EUROCHEM

Tecnimont

17-ID-0735_shA INJ SYS OXIDANT BIOCIDE 2 – SODIUM HYPOCHLORITE

DCS LOGIC DIAGRAMS-AMMONIA UTILITIES

AMMONIA AND UREA PRODUCTION, KINGISEPP

3000 MTPD AMMONIA

TECNIMONT IDENTIFICATION CODE	
Document Number	Revision
4124-JK-DD-217000010	03
Sheet 380	next 382
Sh.Rev. 02	
CUSTOMER IDENTIFICATION CODE	
"	03

INPUT

Logic Status	TAG
0= 1=	
0= NOT RUNNING 1= RUNNING	17-XS -M076LP-A MCC DI
0= LOCAL 1= REMOTE	17-XSR -M076LP-A MCC DI
0= NOT AVLB 1= AVAILABLE	17-XSA -M076LP-A MCC DI
0= 1=	
0= 1=	
0= 1=	
0= NOT RUNNING 1= RUNNING	17-XS -M076LP-B MCC DI
0= LOCAL 1= REMOTE	17-XSR -M076LP-B MCC DI
0= NOT AVLB 1= AVAILABLE	17-XSA -M076LP-B MCC DI
0= 1=	17-AT -07003RO Field AI
0= 1=	
0= 1=	17-LT -07066 Field AI

DCS SOFTWARE

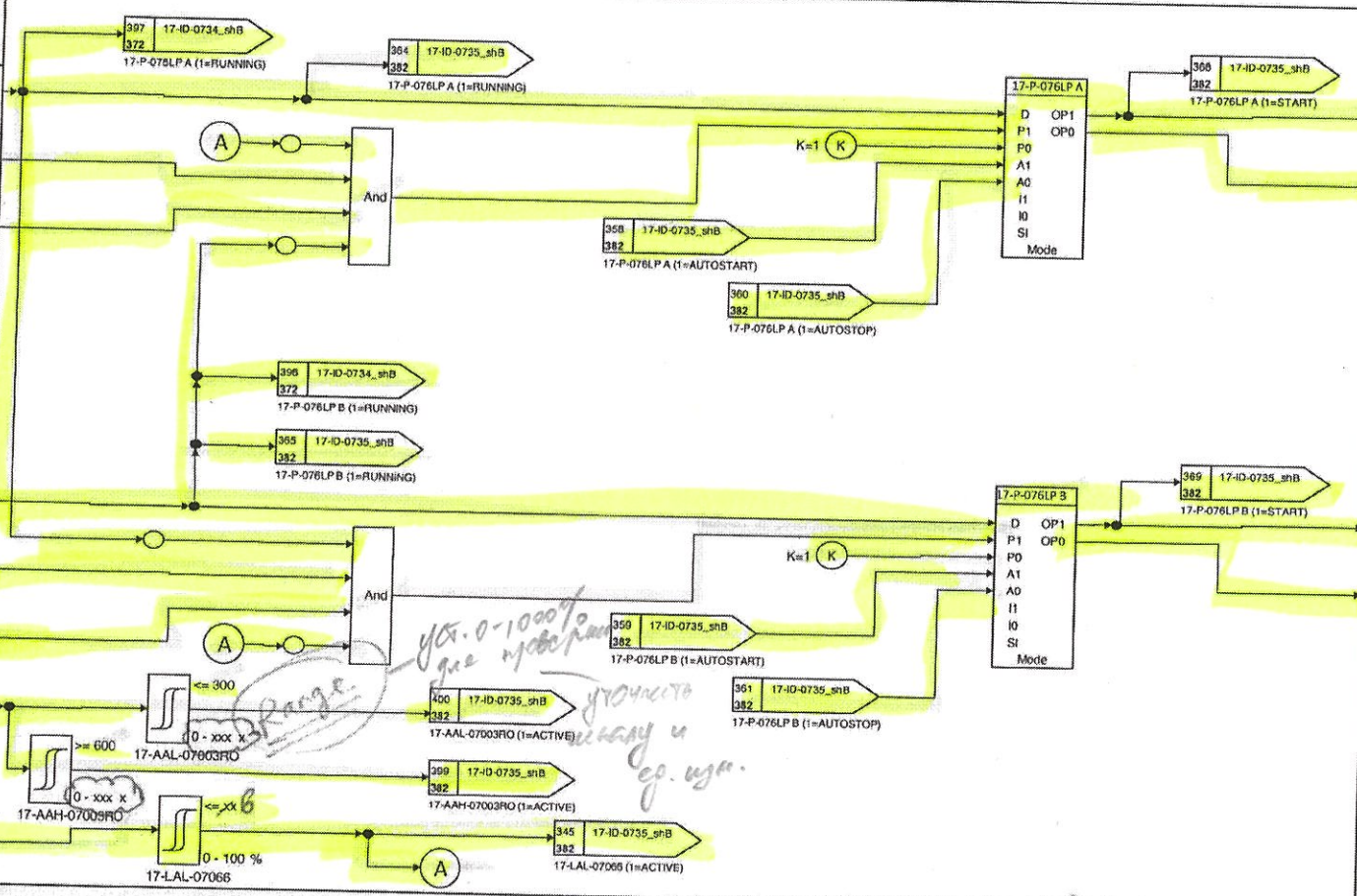

OUTPUT

TAG	Logic Status
	0= 1=
17-XYST-M076LP-A MCC DO	0= NO ACTION 1= START
17-XYSP-M076LP-A MCC DO	0= STOP 1= NO ACTION
	0= 1=
	0= 1=
	0= 1=
	0= 1=
17-XYST-M076LP-B MCC DO	0= NO ACTION 1= START
17-XYSP-M076LP-B MCC DO	0= STOP 1= NO ACTION
	0= 1=
	0= 1=
	0= 1=
	0= 1=

21.02.25 ГКС 21.02.25 30.01.25 4/2/22 04/02/22 04.02.2022 Eurochem

EUROCHEM	17-ID-0735_shB INJ SYS OXIDANT BIOCIDE 2 – SODIUM HYPOCHLORITE DCS LOGIC DIAGRAMS-AMMONIA UTILITIES AMMONIA AND UREA PRODUCTION, KINGISEPP	TECNIMONT IDENTIFICATION CODE Document Number 4124-JK-DD-217000010 Revision 03 Sheet 382 next 390 Sh.Rev. 02
Tecnimont	3000 MTPD AMMONIA	CUSTOMER IDENTIFICATION CODE - 03

INPUT | DCS SOFTWARE | OUTPUT

Logic Status	TAG
0= 1=	
0= 1=	
0= 1=	
0= 1=	
0= 1=	
0= 1=	
0= 1=	
0= 1=	
0= 1=	
0= 1=	
0= 1=	
0= 1=	
0= 1=	
0= 1=	

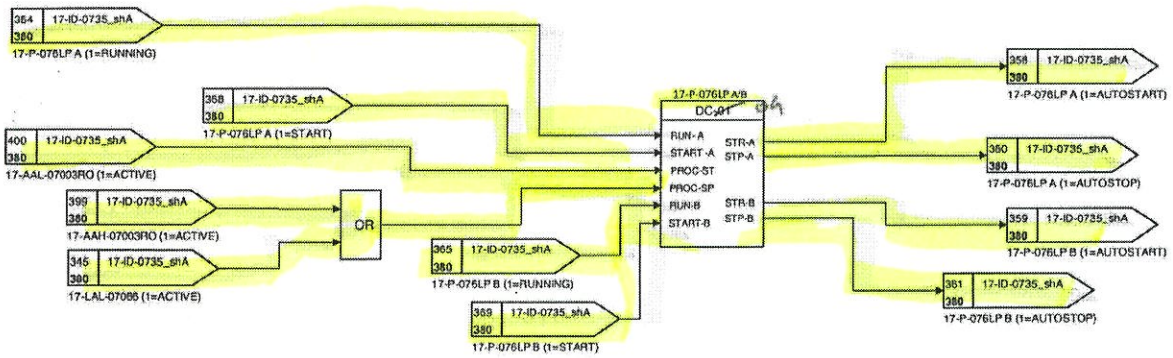

TAG	Logic Status
	0= 1=
	0= 1=
	0= 1=
	0= 1=
	0= 1=
	0= 1=
	0= 1=
	0= 1=
	0= 1=
	0= 1=
	0= 1=
	0= 1=
	0= 1=
	0= 1=

NOTE!- Pump start/stop based on schedule ON/OFF tested during FAT. - не протестировано

21.02.26 21.02.26 9/2/22 04.02.2022 04.02.2022 Eurochem

EUROCHEM

Tecnimont

17-ID-0911 INSTRUMENT AIR BUFFER VESSELS

DCS LOGIC DIAGRAMS-AMMONIA UTILITIES

AMMONIA AND UREA PRODUCTION, KINGISEPP

3000 MTPD AMMONIA

TECNIMONT IDENTIFICATION CODE	
Document Number	Revision
4124-JK-DD-217000010	03
Sheet 390 next 400	
Sh.Rev. 03	
CUSTOMER IDENTIFICATION CODE	
-	03

INPUT | DCS SOFTWARE | OUTPUT

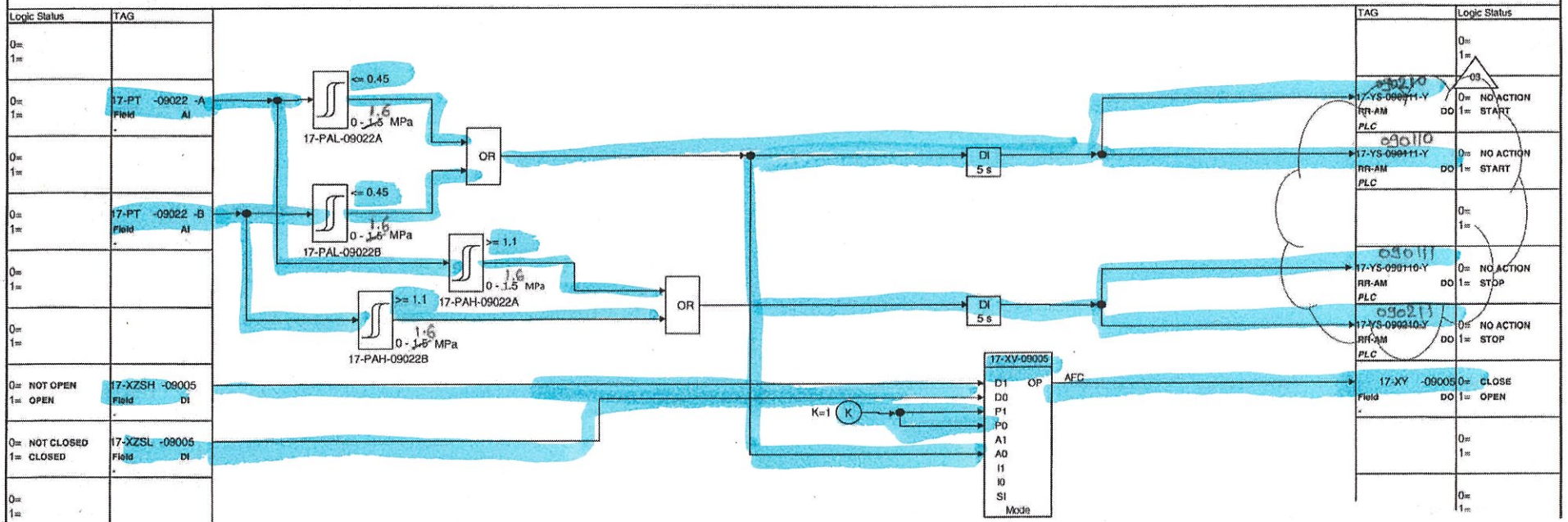

21.02.25 TCM 25/5/22 SE 25.05.22 EUW 25.05.22

EUROCHEM

Tecnimont

17-ID-1001 M2 TO HHP N2 COMP & KINGISEPP 1 BATTERY LIMIT

DCS LOGIC DIAGRAMS-AMMONIA UTILITIES

AMMONIA AND UREA PRODUCTION, KINGISEPP

3000 MTPD AMMONIA

TECNIMONT IDENTIFICATION CODE	
Document Number	Revision
4124-JK-DD-217000010	03
Sheet 400	next 410
Sh.Rev. 01	
CUSTOMER IDENTIFICATION CODE	
	03

INPUT

Logic Status	TAG
0= 1=	
0= NOT OPEN 1= OPEN	17-XZSH -10061 Field DI
0= NOT CLOSED 1= CLOSED	17-XZSL -10061 Field DI
0= 1=	
0= 1=	17-PT -10002 Field AI
0= 1=	
0= Normal 1= Alarm	17-XS-01005X ESD DI
0= NOT OPEN 1= OPEN	17-XZSH -10060 Field DI
0= NOT CLOSED 1= CLOSED	17-XZSL -10060 Field DI
0= 1=	
0= 1=	
0= 1=	
0= 1=	

DCS SOFTWARE

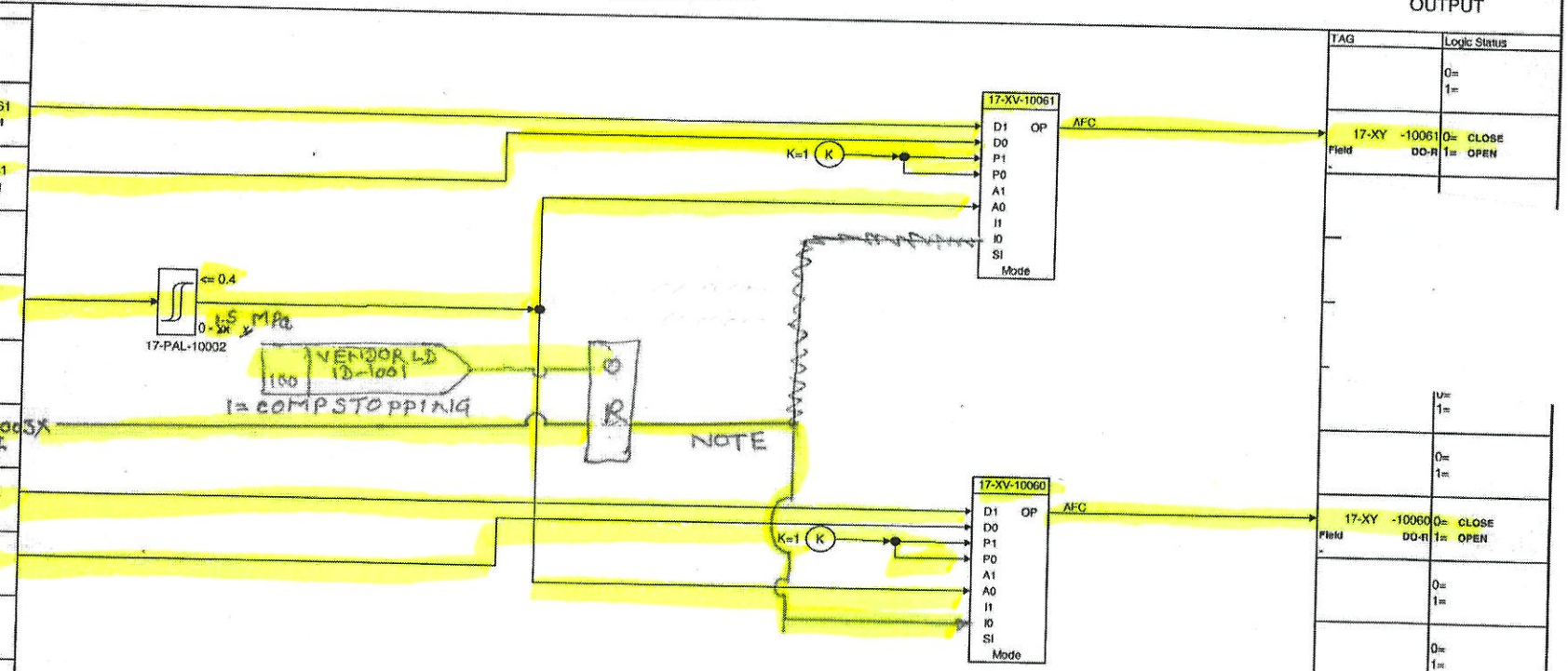

NOTE:- Exchange signal from ESD to DCS used to start Aux Lube oil pump start

P&ID:4124-XZ-DM-21710001

OUTPUT

TAG	Logic Status
	0= 1=
17-XY -10061 Field DO-R	0= CLOSE 1= OPEN
	0= 1=
	0= 1=
17-XY -10060 Field DO-R	0= CLOSE 1= OPEN
	0= 1=
	0= 1=
	0= 1=
	0= 1=
	0= 1=

22/3/22 SE. 16.05.22 ENW-2 17.03.25

EUROCHEM

Tecnimont

17-ID-1101 PHOSPHATE INJECTION SYSTEM (17-L-112)

DCS LOGIC DIAGRAMS-AMMONIA UTILITIES

AMMONIA AND UREA PRODUCTION, KINGISEPP

3000 MTPD AMMONIA

TECNIMONT IDENTIFICATION CODE	
Document Number	Revision
4124-JK-DD-217000010	03
Sheet 410 next 420	
Sh.Rev. 02	
CUSTOMER IDENTIFICATION CODE	
-	03

INPUT

Logic Status	TAG
0= 1=	
0= NOT RUNNING 1= RUNNING	17-XS -M01AL112 DCS DI
0= NOT AVLB 1= AVAILABLE	17-XSA-M01AL112 DCS DI
0= LOCAL 1= REMOTE	17-XSR-M01AL112 MCC DI
0= 1=	
0= 1=	17-LT -11503 Field AI
0= 1=	
0= NOT RUNNING 1= RUNNING	17-XS -M01BL112 DCS DI
0= NOT AVLB 1= AVAILABLE	17-XSA -M01BL112 MCC DI
0= LOCAL 1= REMOTE	17-XSR-M01BL112 MCC DI
0= 1=	
0= 1=	
0= 1=	

DCS SOFTWARE

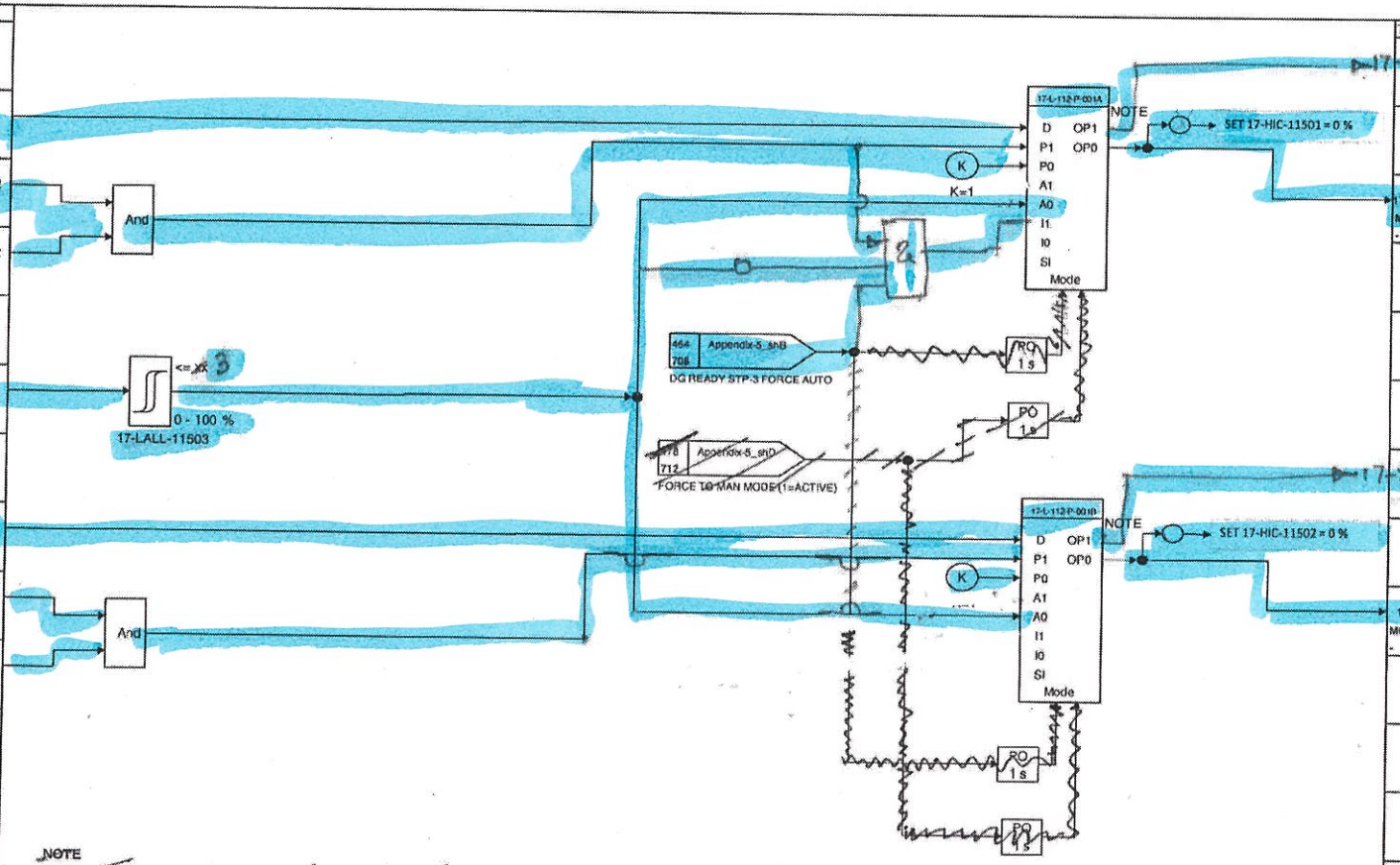

OUTPUT

TAG	Logic Status
17-XYST-M01 AL112	0= NO ACTION 1=START
	0= 1=
17-XYSP-M01AL112 MCC DO	0= STOP 1= NO ACTION
	0= 1=
	0= 1=
	0= 1=
17-XYST-M01 BL112	0= NO ACTION 1= START
	0= 1=
17-XYSP-M01BL112 MCC DO	0= STOP 1= NO ACTION
	0= 1=
	0= 1=
	0= 1=
	0= 1=

V 6

14.02.22 14.02.25 16/2/22 14.02.25 14.01.22 16.02.2022

EUROCHEM

Tecnimont

17-ID-1102 OXUGEN SCAVENGER INJECTION SYSTEM 17-L-113

DCS LOGIC DIAGRAMS-AMMONIA UTILITIES

AMMONIA AND UREA PRODUCTION, KINGISEPP

3000 MTPD AMMONIA

TECNIMONT IDENTIFICATION CODE	
Document Number	Revision
4124-JK-DD-217000010	03
Sheet 420	next 430
Sh.Rev. 02	
CUSTOMER IDENTIFICATION CODE	
-	03

INPUT

Logic Status	TAG
0= 1=	
0= NOT RUNNING 1= RUNNING	17-XS -M01AL-113 DCS DI -
0= NOT AVLB 1= AVAILABLE	17-XSA -M01AL-113 DCS DI -
0= LOCAL 1= REMOTE	17-XSR -M01AL-113 MCC DI -
0= 1=	
0= 1=	17-LT -11504 Field AI -
0= 1=	
0= NOT RUNNING 1= RUNNING	17-XS -M01BL-113 DCS DI -
0= NOT AVLB 1= AVAILABLE	17-XSA-M01BL-113 DCS DI -
0= LOCAL 1= REMOTE	17-XSR-M01BL-113 MCC DI -
0= 1=	
0= 1=	
0= 1=	

DCS SOFTWARE

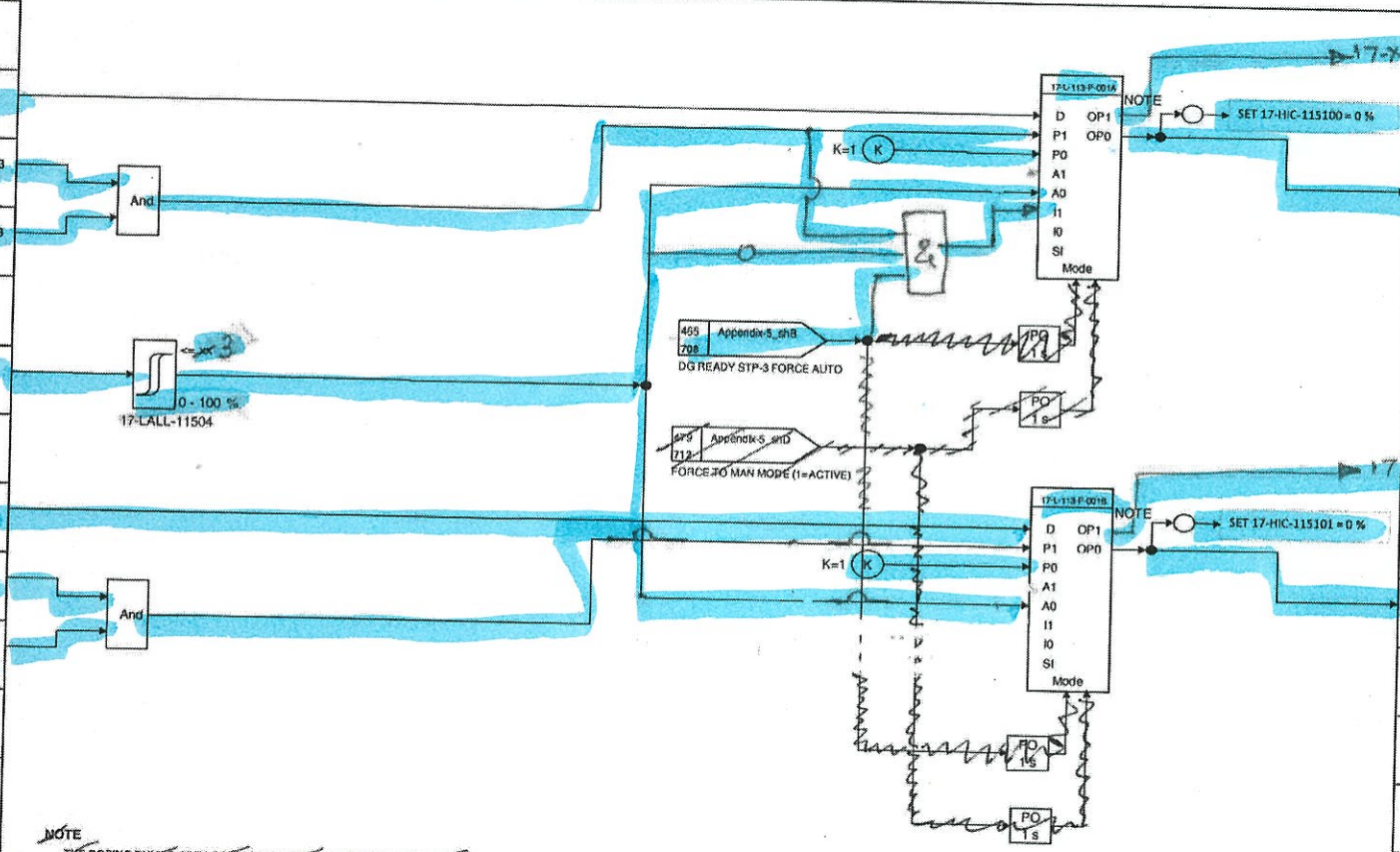

NOTE
THE DOSING PUMPS ARE LOCALLY STARTED (NO REMOTE DCS START)

P&ID:4124-XZ-DM-21711501; 4124-FY-VD-BD17117L11300001

OUTPUT

TAG	Logic Status
17-XYST-M01 A LIB	0= NO ACTION 1= START
	0= 1=
17-XYSP-M01AL-113 MCC DO -	0= STOP 1= NO ACTION
	0= 1=
	0= 1=
	0= 1=
17 XYSTM01 BL113	0= NO ACTION 1= START
	0= 1=
17-XYSP-M01BL-113 MCC DO -	0= STOP 1= NO ACTION
	0= 1=
	0= 1=
	0= 1=
	0= 1=

L6

TKC 14.02.25

14.02.25

14.02.25

16/2/22

14.02.22

16.02.2022

EUROCHEM

Tecnimont

17-ID-1103 AMINE INJECTION SYSTEM 17-L-114

DCS LOGIC DIAGRAMS-AMMONIA UTILITIES

AMMONIA AND UREA PRODUCTION, KINGISEPP

3000 MTPD AMMONIA

TECNIMONT IDENTIFICATION CODE	
Document Number	Revision
4124-JK-DD-217000010	03
Sheet 430 next ~~440~~ 435	
Sh.Rev. 02	
CUSTOMER IDENTIFICATION CODE	
-	03

INPUT

Logic Status	TAG
0= 1=	
0= NOT RUNNING 1= RUNNING	17-XS -M01AL-114 DCS DI
0= NOT AVLB 1= AVAILABLE	17-XSA -M01AL-114 DCS DI
0= LOCAL 1= REMOTE	17-XSR -M01AL-114 MCC DI
0= 1=	
0= 1=	17-LT -11505 Field AI
0= 1=	
0= NOT RUNNING 1= RUNNING	17-XS -M01BL-114 DCS DI
0= NOT AVLB 1= AVAILABLE	17-XSA -M01BL-114 MCC DI
0= LOCAL 1= REMOTE	17-XSR -M01BL-114 MCC DI
0= 1=	
0= 1=	
0= 1=	

DCS SOFTWARE

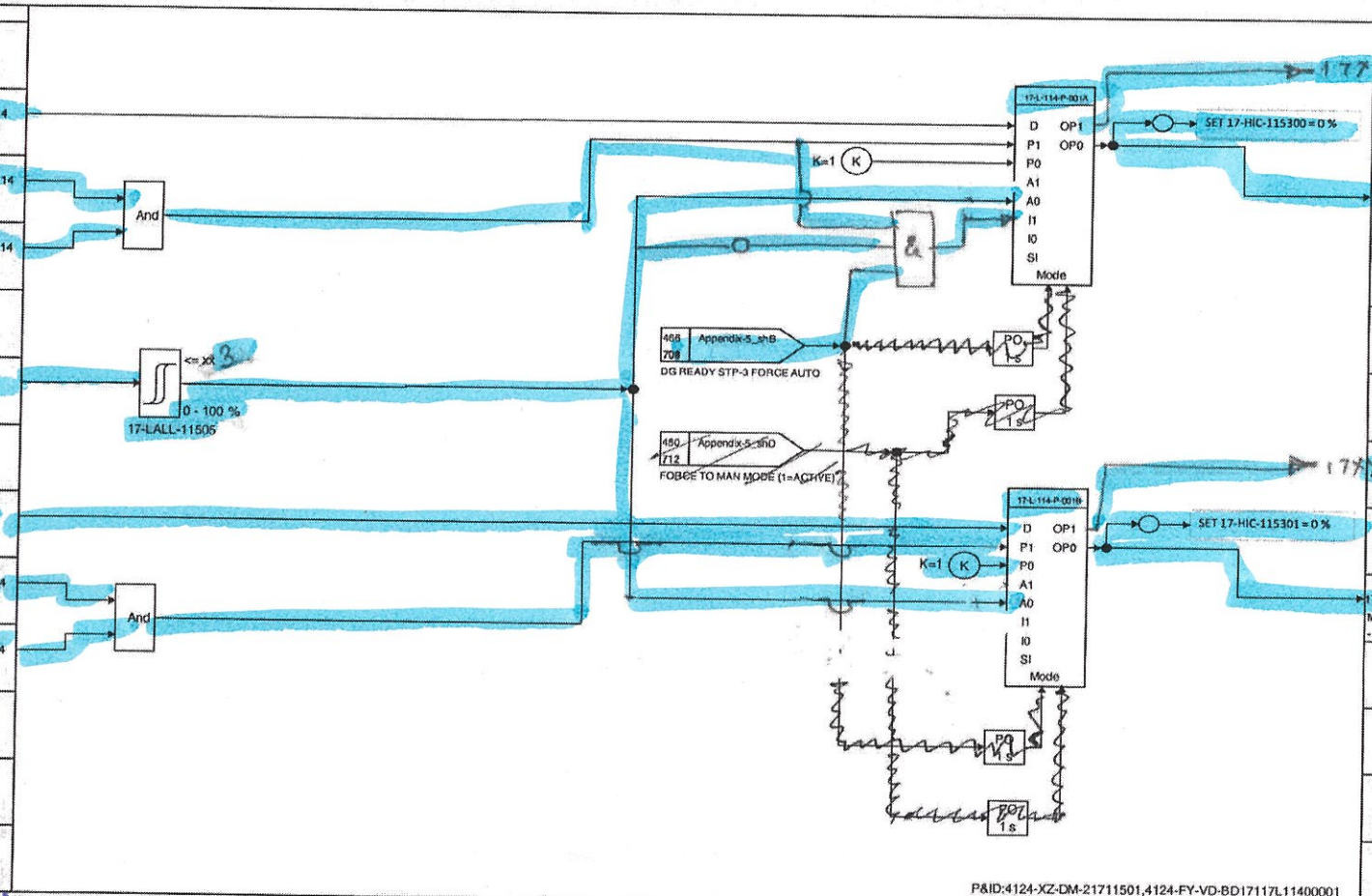

OUTPUT

TAG	Logic Status
17-YSTM01 AL114	0= NO ACTION 1= START
	0= 1=
17-XYSP-M01AL-114 MCC DO	0= STOP 1= NO ACTION
	0= 1=
	0= 1=
	0= 1=
17-YSTM01 BL114	0= NO ACTION 1= START
	0= 1=
17-XYSP-M01BL-114 MCC DO	0= STOP 1= NO ACTION
	0= 1=
	0= 1=
	0= 1=
	0= 1=

P&ID:4124-XZ-DM-21711501,4124-FY-VD-BD17117L11400001

79

FKC 14.02.25

14.02.25

14.02.25

16/2/22

14.02.22

16.02.2022

17-1D-1180 17-P-111A. L.O. Pump start.
(17-M-111A L01B).

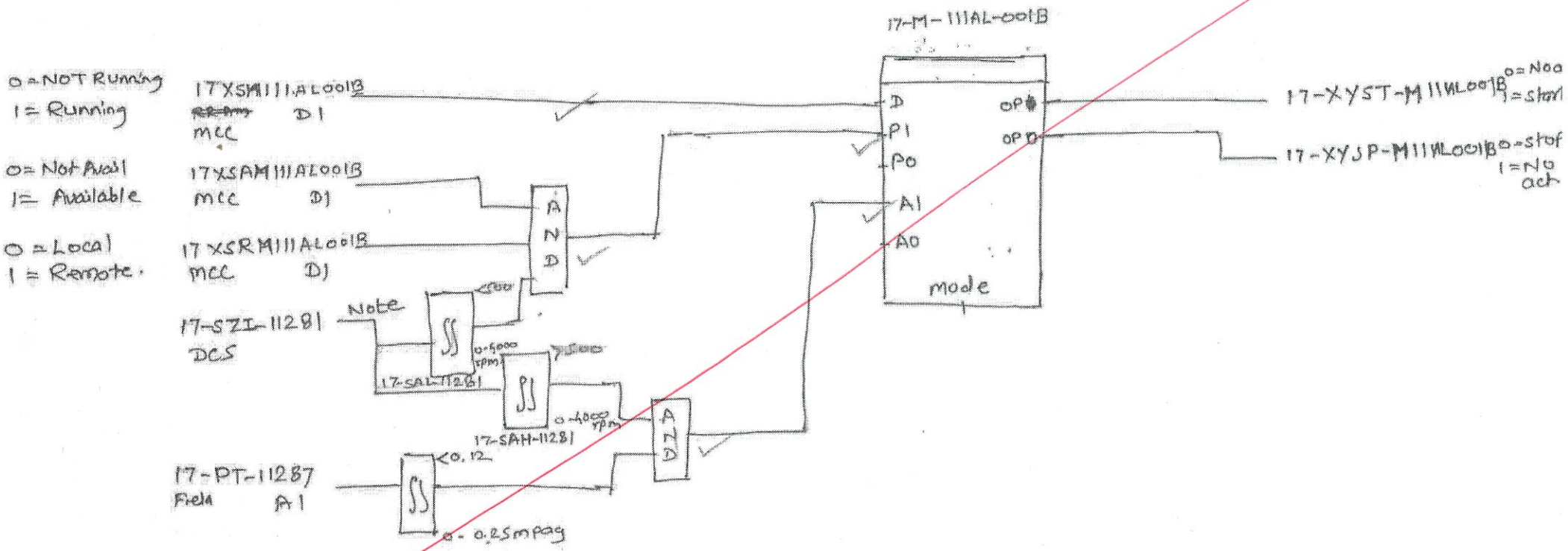

Note- 17-SZT-11281 is avg. of 17-SZI-11281 AX/BX/CX From OST.

Rajhake 24/5/22

Nedergel MB SE 24.05.22

ENW-2 24.05.22

Rail market.

17-1D-1104_ShA

Sheet 435
Next 440

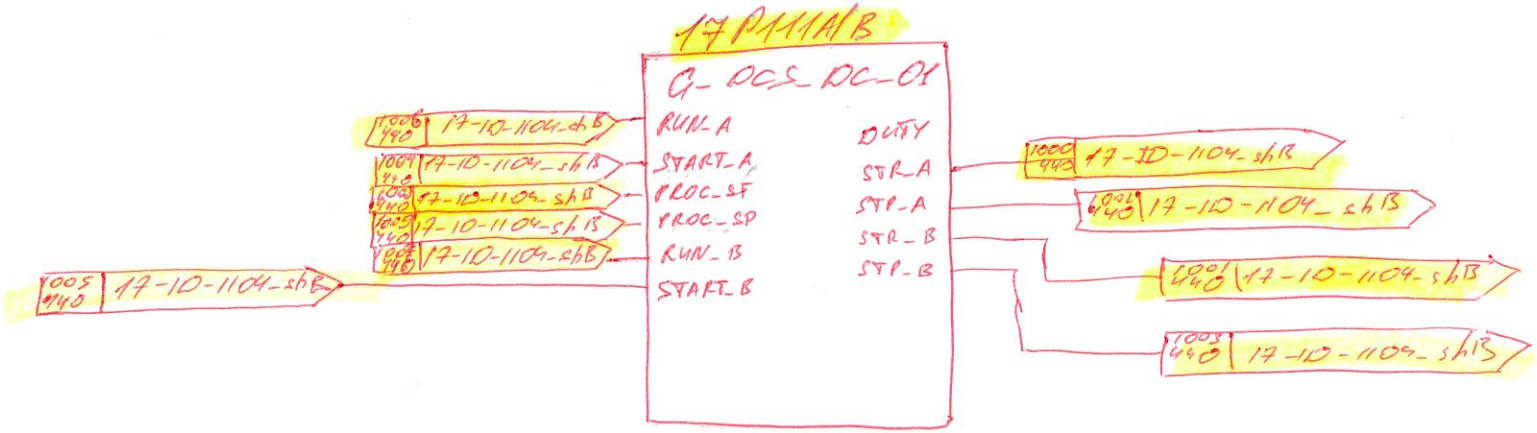

21.02.25

ГКС
21-02-25

21.02.25

EuroChem

Tecnimont

17-ID-1104_shB BOILER FEED WATER PUMPS START/AUTOSTART

DCS LOGIC DIAGRAMS-AMMONIA UTILITIES

AMMONIA AND UREA PRODUCTION, KINGISEPP

3000 MTPD AMMONIA

TECNIMONT IDENTIFICATION CODE	
Document Number	Revision
4124-JK-DD-217000010	03
Sheet 440	next 450
Sh.Rev. 03	
CUSTOMER IDENTIFICATION CODE	
-	03

INPUT

Logic Status	TAG
0= NOT RUN 1= RUN	17XSMIIIA MCC DI
0= NOT AVAIL 1= AVAILABLE	17XSAMIIIA MCC DI
0= LOCAL 1= REMOTE	17XSRMIIIA MCC DI
0= 1=	
0= NORMAL 1= TRIP	17XSTMIIIAOR DCS ESD SDI
0= 1=	
0= NOT RUNNING 1= RUNNING	17-XS -M111 -B MCC DI
0= NOT AVLB 1= AVAILABLE	17-XSA -M111 -B MCC DI
0= LOCAL 1= REMOTE	17-XSR -M111 -B MCC DI
0= NORMAL 1= ALARM	17-XA -01102-A DCS ESD SDI
0= 1=	17-PT -11200 Field AI
0= 1=	17-LT -113500 Field AI-R
0= NORMAL 1= TRIP	17-XST-M111-BOR DCS ESD SDI

DCS SOFTWARE

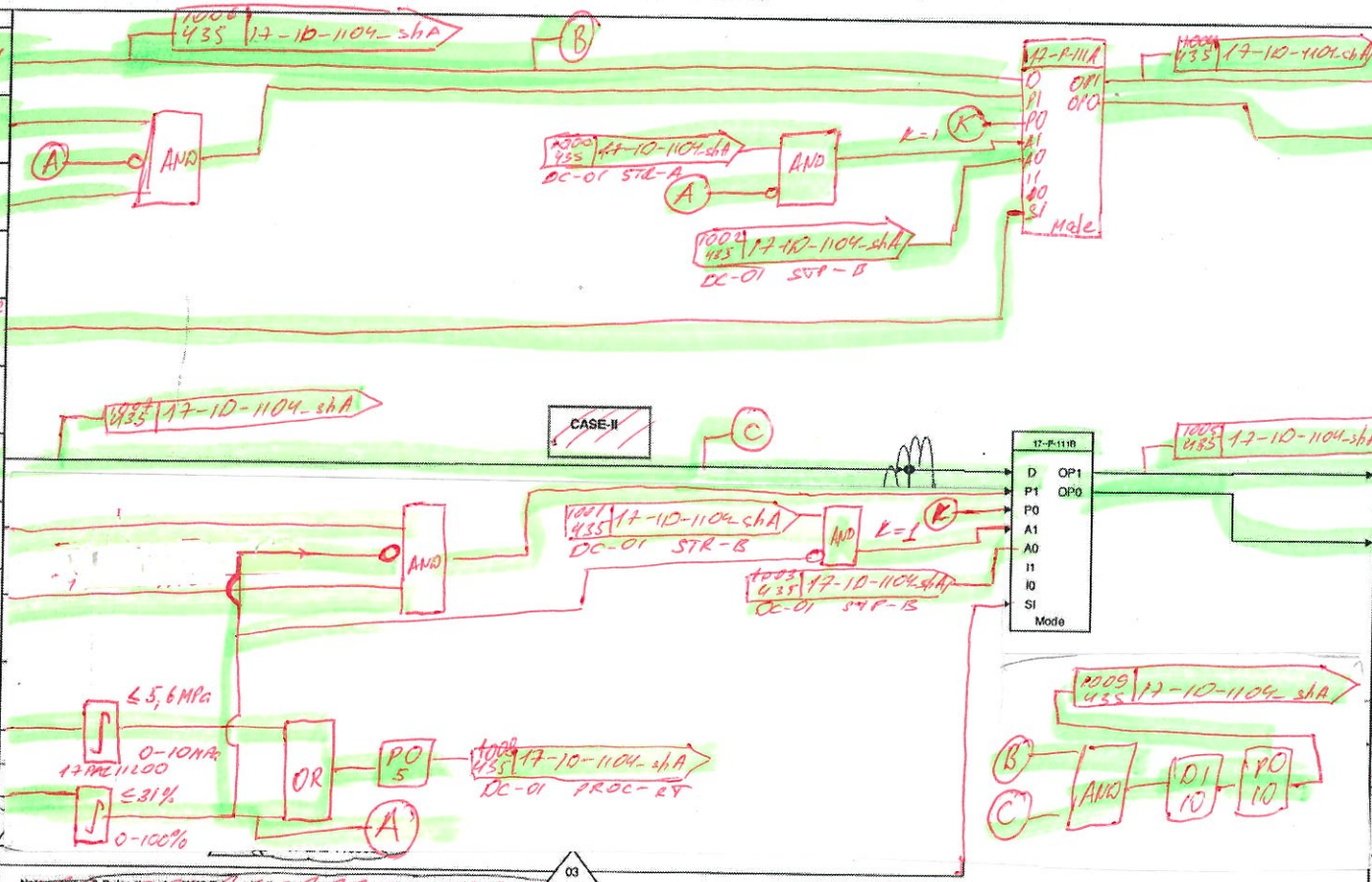

Note: Value & Pulse timer for MMS Trip multiplier to be defined on site during commissioning stage
INITIATORS FOR AUTO START TO BE DEFINED

P&ID:4124-XZ-DM-21711201/4124-XZ-DM-21711301

OUTPUT

TAG	Logic Status
17XYSMIIIA MCC DO	0= NO ACT. 1= START
17XYSPMIIIA MCC DO	0= STOP 1= NO ACT.
	0= 1=
	0= 1=
	0= 1=
	0= 1=
17-XYST -M111-B MCC DO	0= NO ACTION 1= START
17-XYSP -M111-B MCC DO	0= STOP 1= NO ACTION
	0= 1=
	0= 1=
17-XS-11284-Y MMS DO	0= NOT ACTIVE 1= ACTIVE
	0= 1=
	0= 1=

21.02.25 MKC 21-02-25 21.02.25

24/5/22

Лебедев М.В. 24.05.22. SF

ENW-2 24.05-22

EUROCHEM

Tecnimont

17-ID-1301_shA SAFETY SHOWER PUMP START

DCS LOGIC DIAGRAMS-AMMONIA UTILITIES

AMMONIA AND UREA PRODUCTION, KINGISEPP

3000 MTPD AMMONIA

TECNIMONT IDENTIFICATION CODE	
Document Number	Revision
4124-JK-DD-217000010	03
Sheet 450	next 452
Sh.Rev. 02	
CUSTOMER IDENTIFICATION CODE	
-	03

INPUT

Logic Status	TAG
0= 1=	
0= NOT RUNNING 1= RUNNING	17-XS -M131 -A MCC DI -
0= NOT AVLB 1= AVAILABLE	17-XSA -M131 -A MCC DI -
0= LOCAL 1= REMOTE	17-XSR -M131 -A MCC DI -
0= 1=	
0= NORMAL 1= TRIP	17-XST-M131-AOR DCS SDI ESD
0= 1=	
0= NOT RUNNING 1= RUNNING	17-XS -M131 -B MCC DI -
0= NOT AVLB 1= AVAILABLE	17-XSA -M131 -B MCC DI -
0= LOCAL 1= REMOTE	17-XSR -M131 -B MCC DI -
0= 1=	
0= NORMAL 1= TRIP	17-XST-M131-BOR DCS SDI ESD
0= 1=	

DCS SOFTWARE

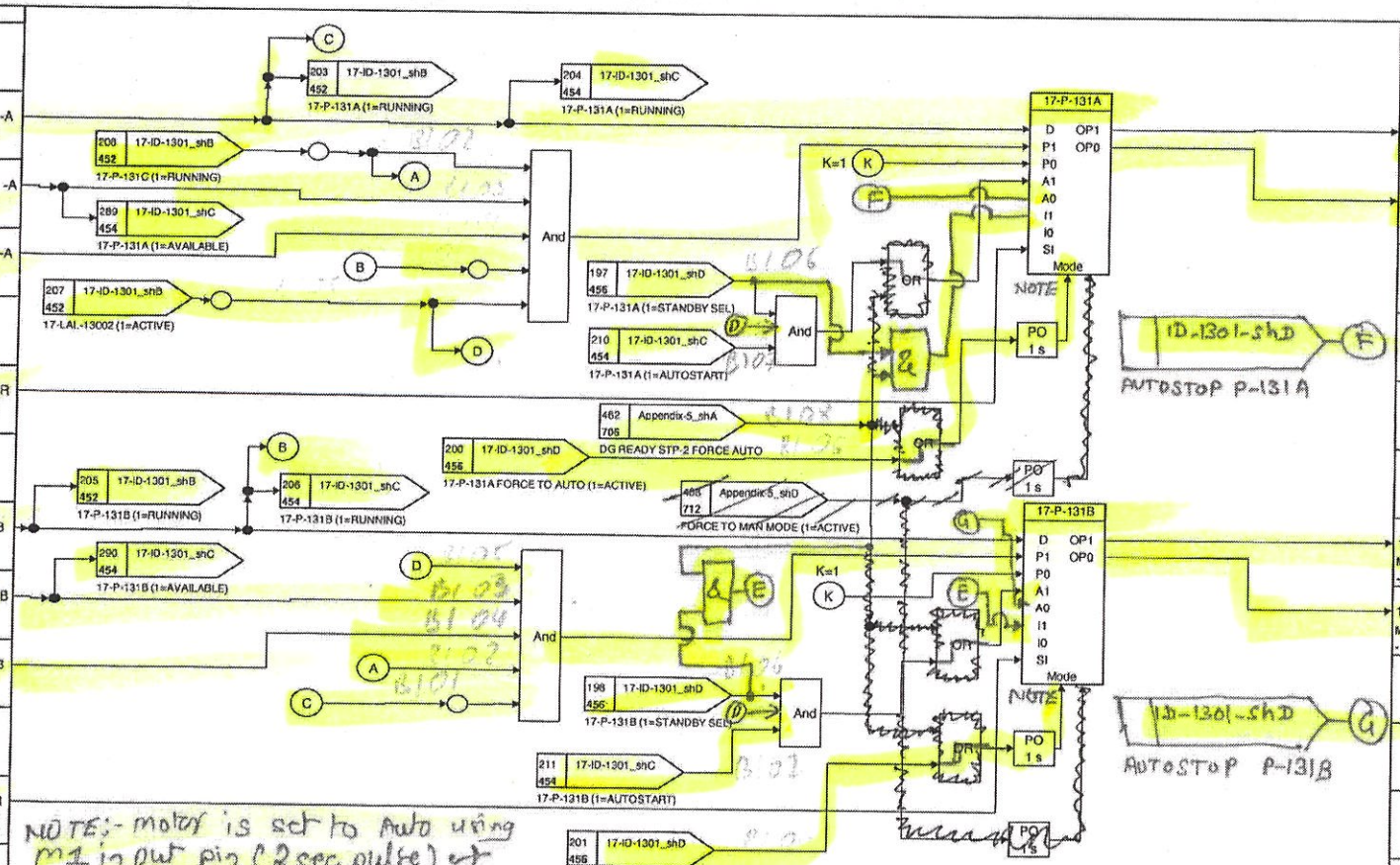

NOTE:- motor is set to Auto using M1 input pin (2sec pulse) at motor block

OUTPUT

TAG	Logic Status
	0= 1=
17-XYST -M131 -A MCC DO -	0= NO ACTION 1= START
17-XYSP -M131 -A MCC DO -	0= STOP 1= NO ACTION
	0= 1=
	0= 1=
	0= 1=
	0= 1=
17-XYST -M131 -B MCC DO -	0= NO ACTION 1= START
17-XYSP -M131 -B MCC DO -	0= STOP 1= NO ACTION
	0= 1=
	0= 1=
	0= 1=
	0= 1=

21.02.25 PKC 21.02.25 16/2/22 21.02.25 16.02.22 17.02.2022

EUROCHEM

Tecnimont

17-ID-1301_shB SAFETY SHOWER PUMP START

DCS LOGIC DIAGRAMS-AMMONIA UTILITIES

AMMONIA AND UREA PRODUCTION, KINGISEPP

3000 MTPD AMMONIA

TECNIMONT IDENTIFICATION CODE	
Document Number	Revision
4124-JK-DD-217000010	03
Sheet 452 next 454	
Sh.Rev. 02	
CUSTOMER IDENTIFICATION CODE	
-	03

INPUT

Logic Status	TAG
0= 1=	
0= NOT RUNNING 1= RUNNING	17-XS -M131 -C MCC DI
0= NOT AVLB 1= AVAILABLE	17-XSA -M131 -C MCC DI
0= LOCAL 1= REMOTE	17-XSR -M131 -C MCC DI
0= 1=	
0= 1=	
0= NORMAL 1= TRIP	17-XST-M131-COR DCS SDI ESD
0= 1=	
0= 1=	
0= 1=	
0= 1=	17-LT -13002 Field AI-R
0= 1=	
0= 1=	

DCS SOFTWARE

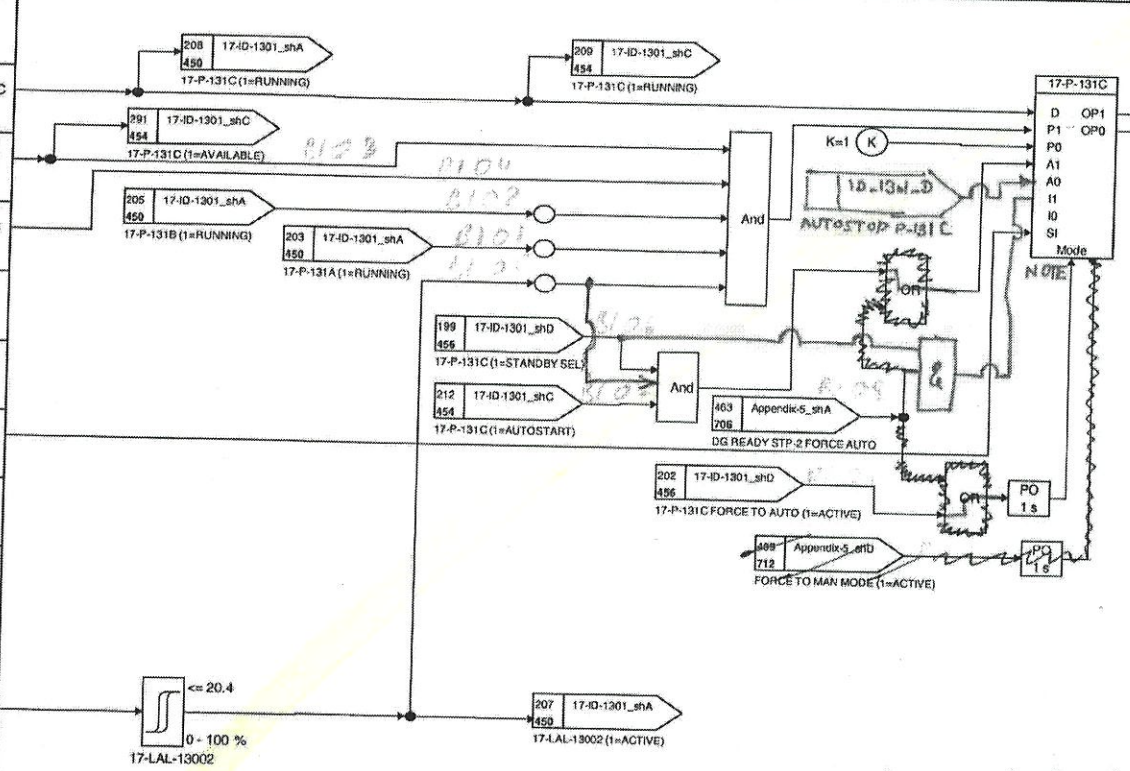

OUTPUT

TAG	Logic Status
	0= 1=
17-XYST -M131 -C MCC DO	0= NO ACTION 1= START
17-XYSP -M131 -C MCC DO	0= STOP 1= NO ACTION
	0= 1=
	0= 1=
	0= 1=
	0= 1=
	0= 1=
	0= 1=
	0= 1=
	0= 1=
	0= 1=
	0= 1=

Note- motor is set to Auto using m1 pin input (2s pulse) of motor block.

21.02.25 PKC 21.02.25 16/2/22 21.02.25 16.02.22 17.02.2022

EUROCHEM

Tecnimont

17-ID-1301_shC SAFETY SHOWER PUMP START

DCS LOGIC DIAGRAMS-AMMONIA UTILITIES

AMMONIA AND UREA PRODUCTION, KINGISEPP

3000 MTPD AMMONIA

TECNIMONT IDENTIFICATION CODE	
Document Number	Revision
4124-JK-DD-217000010	03
Sheet 454 next 456	
Sh.Rev. 01	
CUSTOMER IDENTIFICATION CODE	
-	03

INPUT | DCS SOFTWARE | OUTPUT

Logic Status	TAG
0= 1=	
0= 1=	
0= 1=	
0= 1=	
0= 1=	
0= 1=	
0= 1=	
0= 1=	
0= 1=	
0= 1=	
0= 1=	
0= 1=	
0= 1=	

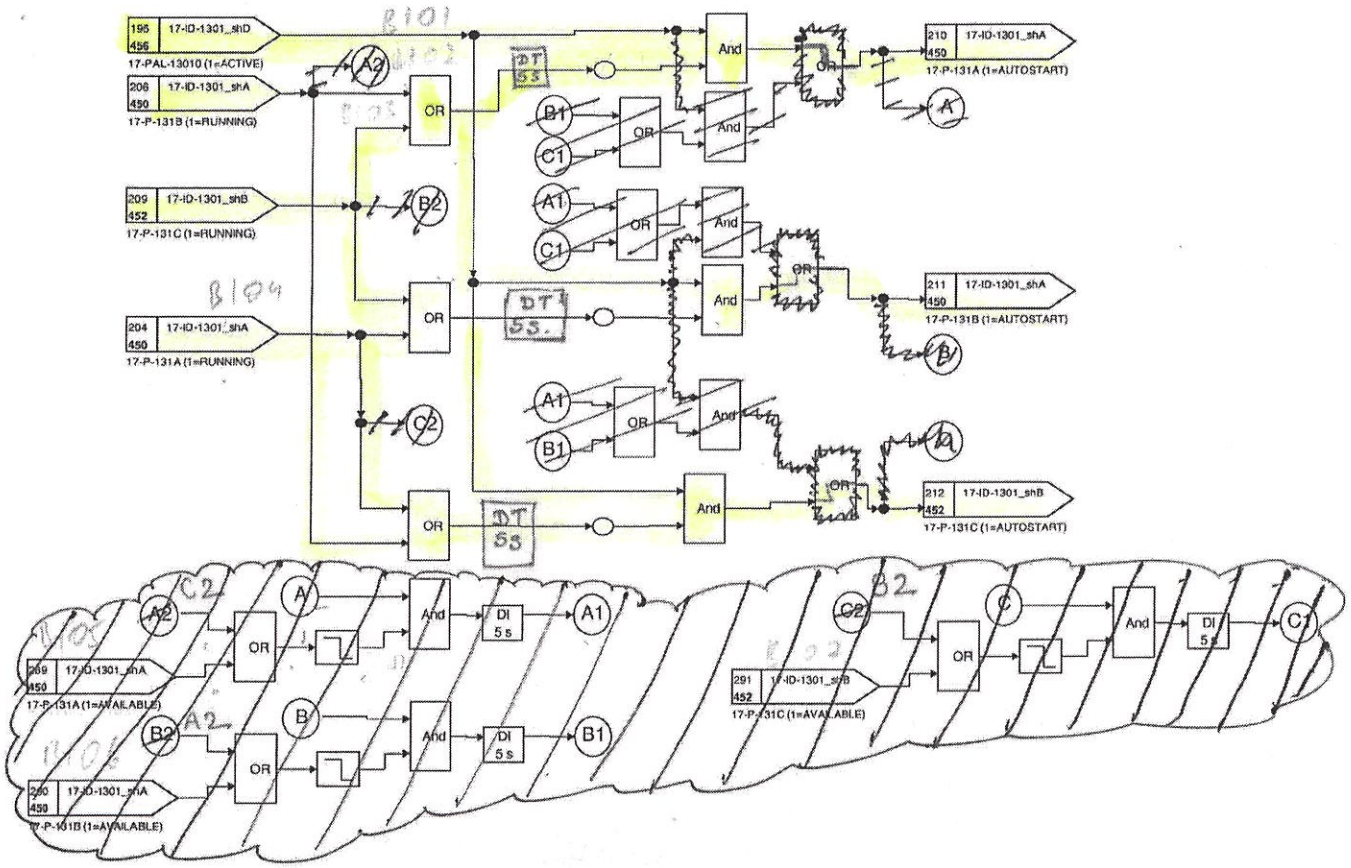

TAG	Logic Status
	0= 1=
	0= 1=
	0= 1=
	0= 1=
	0= 1=
	0= 1=
	0= 1=
	0= 1=
	0= 1=
	0= 1=
	0= 1=
	0= 1=
	0= 1=

21.02.25 ПКС 21.02.25 16/2/22 21.02.25 16.02.22 17.02.2022

EUROCHEM

Tecnimont

17-ID-1301_shD SAFETY SHOWER PUMP START

DCS LOGIC DIAGRAMS-AMMONIA UTILITIES

AMMONIA AND UREA PRODUCTION, KINGISEPP

3000 MTPD AMMONIA

TECNIMONT IDENTIFICATION CODE	
Document Number	Revision
4124-JK-DD-217000010	03
Sheet 456	next 460
Sh.Rev. 02	
CUSTOMER IDENTIFICATION CODE	
-	03

INPUT

Logic Status	TAG
0= 1=	
0= 1=	17-PT -13010 Field AI -
0= 1=	
0= 1=	
0= 1=	
0= 1=	
0= NO ACTION 1= ACTIVE	17-HS -13001 DCS SOFT
0= 1=	
0= 1=	
0= 1=	
0= 1=	
0= 1=	
0= 1=	
0= 1=	

DCS SOFTWARE

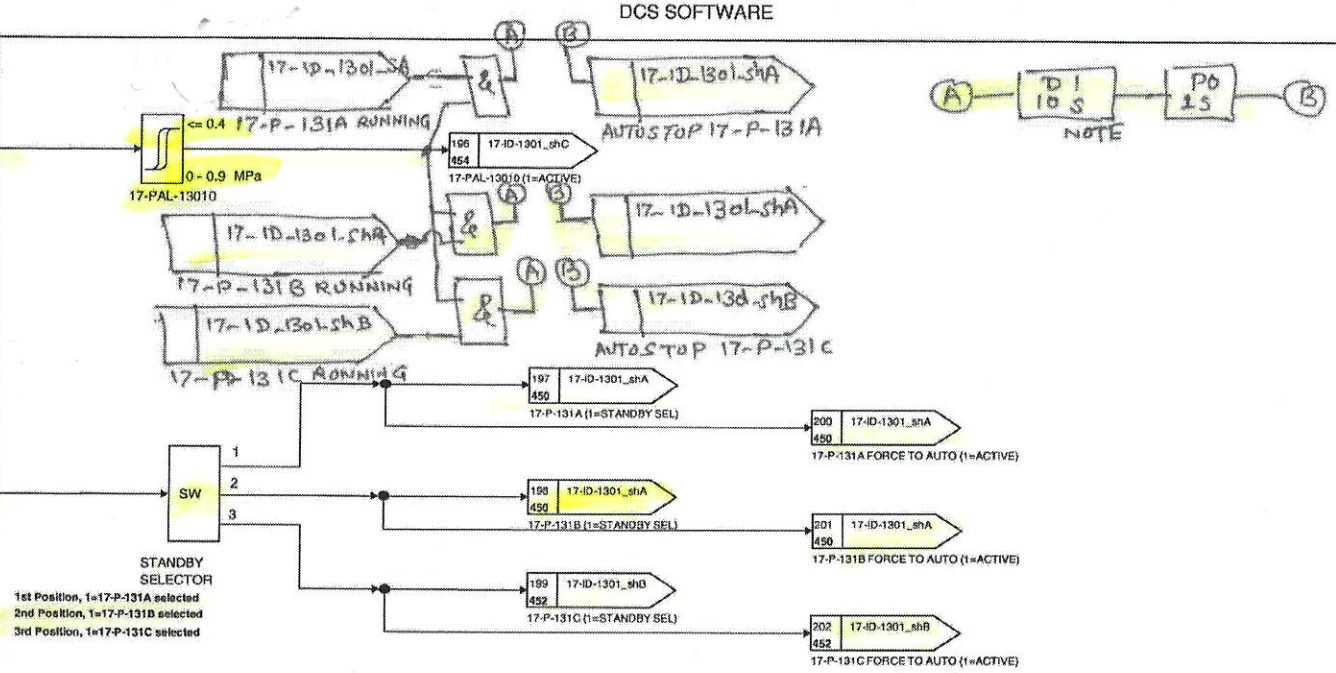

OUTPUT

TAG	Logic Status
	0= 1=
	0= 1=
	0= 1=
	0= 1=
	0= 1=
	0= 1=
	0= 1=
	0= 1=
	0= 1=
	0= 1=
	0= 1=
	0= 1=
	0= 1=
	0= 1=

NOTE:- This ON delay timer can be changed during commissioning on site.

21.01.25 RKC 21.02.25 16/2/22 21.02.25 16.02.22 17.02.2022

EUROCHEM

Tecnimont

17-ID-1401A RAIN WATER PUMPS FOR 17-BS-143A/B

DCS LOGIC DIAGRAMS-AMMONIA UTILITIES

AMMONIA AND UREA PRODUCTION, KINGISEPP

3000 MTPD AMMONIA

TECNIMONT IDENTIFICATION CODE	
Document Number	Revision
4124-JK-DD-217000010	03
Sheet 460	next 462
Sh.Rev. 02	
CUSTOMER IDENTIFICATION CODE	
-	03

INPUT

Logic Status	TAG
0= 1=	
0= NOT RUNNING 1= RUNNING	17-XS -M141 -A MCC DI -
0= 1=	
0= NOT AVLB 1= AVAILABLE	17-XSA -M141 -A MCC DI -
0= 1=	
0= 1=	
0= LOCAL 1= REMOTE	17-XSR -M141 -A MCC DI -
0= NORMAL 1= TRIP	17-XST-M141-AOR DCS SDI ESD
0= TRIP 1= NORMAL	17-TSH -M141A Field DI-R -
0= TRIP 1= NORMAL	17-XSL -M141A Field DI -
0= 1=	17-LT -14002 Field AI -
0= 1=	
0= 1=	

DCS SOFTWARE

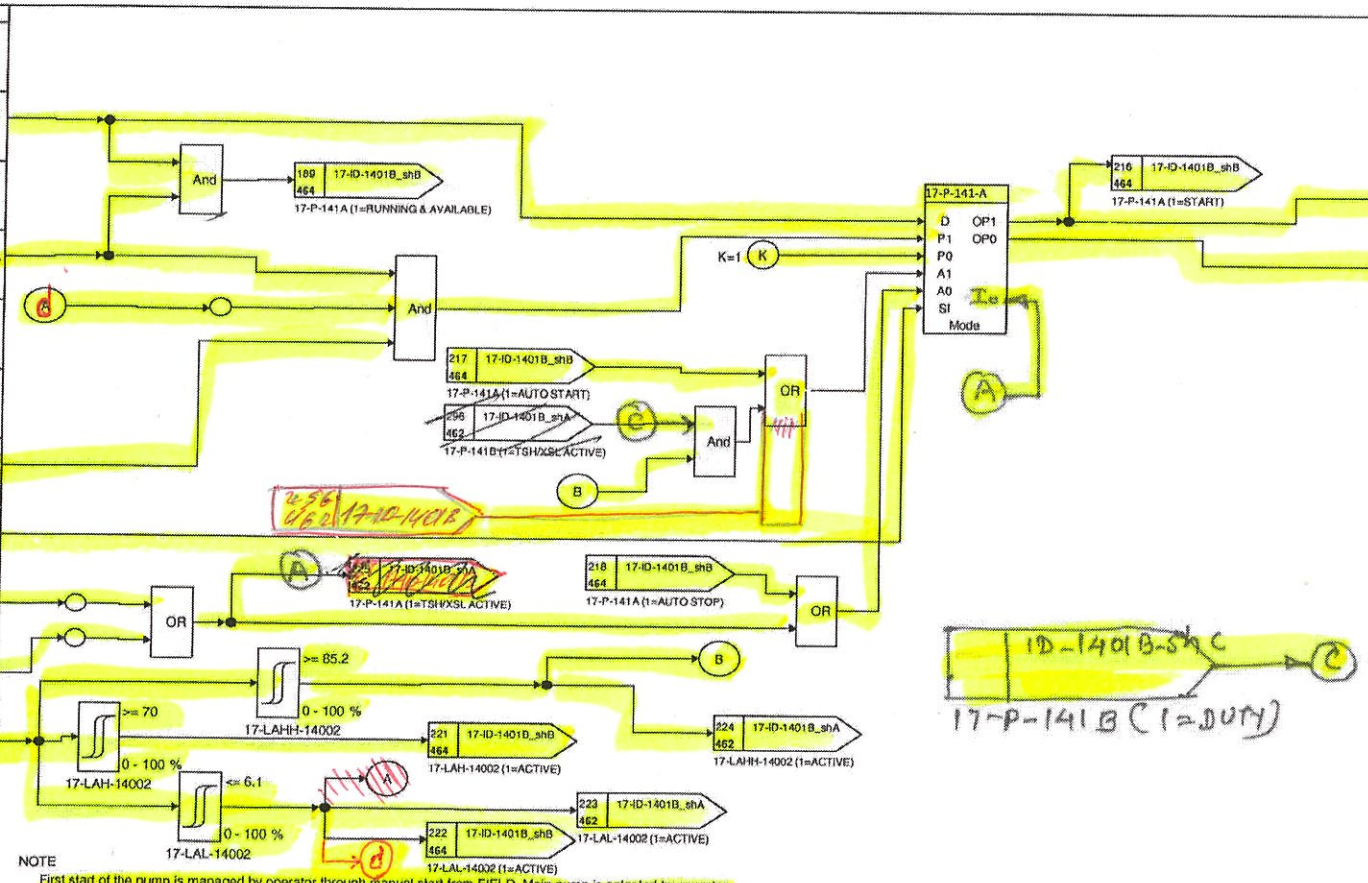

NOTE

First start of the pump is managed by operator through manual start from FIELD. Main pump is selected by operator

P&ID: 4124-XZ-DM-21714001

OUTPUT

TAG	Logic Status
	0= 1=
	0= 1=
17-XYST -M141-A MCC DO -	0= NO ACTION 1= START
17-XYSP -M141-A MCC DO -	0= STOP 1= NO ACTION
	0= 1=
	0= 1=
	0= 1=
	0= 1=
	0= 1=
	0= 1=
	0= 1=
	0= 1=
	0= 1=

EUROCHEM

Tecnimont

17-ID-1401B_shA RAIN WATER PUMPS FOR 17-BS-143A/B

DCS LOGIC DIAGRAMS-AMMONIA UTILITIES

AMMONIA AND UREA PRODUCTION, KINGISEPP

3000 MTPD AMMONIA

TECNIMONT IDENTIFICATION CODE	
Document Number	Revision
4124-JK-DD-217000010	03
Sheet 462 next 464	
Sh.Rev. 02	
CUSTOMER IDENTIFICATION CODE	
-	03

INPUT

Logic Status	TAG
0= 1=	
0= NOT RUNNING 1= RUNNING	17-XS -M141 -B MCC DI
0= 1=	
0= NOT AVLB 1= AVAILABLE	17-XSA -M141 -B MCC DI
0= 1=	
0= 1=	
0= LOCAL 1= REMOTE	17-XSR -M141 -B MCC DI
0= NORMAL 1= TRIP	17-XST-M141-BOR DCS SDI ESD
0= TRIP 1= NORMAL	17-TSH -M141B Field DI-R
0= TRIP 1= NORMAL	17-XSL -M141B Field DI
0= 1=	
0= 1=	
0= 1=	

DCS SOFTWARE

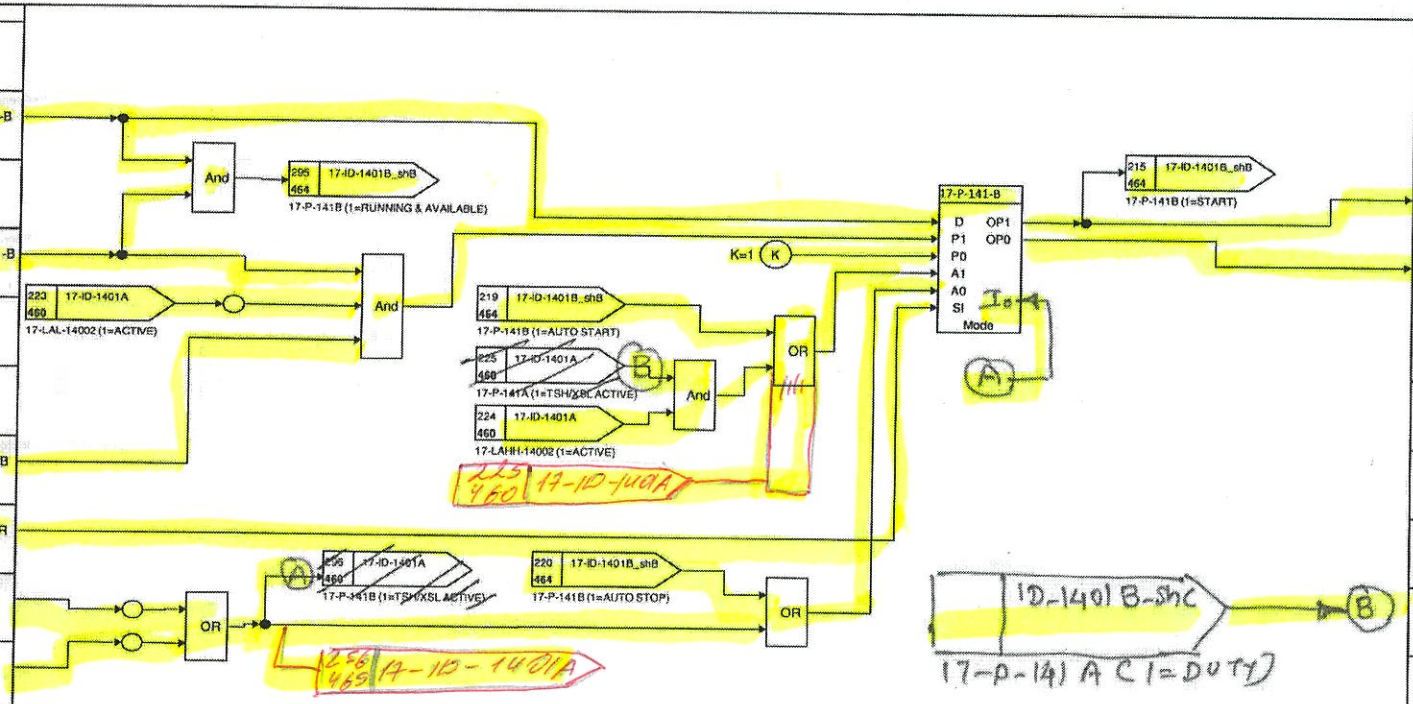

NOTE:
First start of the pump is managed by operator through manual start from FIELD. Main pump is selected by operator

P&ID: 4124-XZ-DM-21714001

OUTPUT

TAG	Logic Status
	0= 1=
	0= 1=
17-XYST -M141-B MCC DO	0= NO ACTION 1= START
17-XYSP -M141-B MCC DO	0= STOP 1= NO ACTION
	0= 1=
	0= 1=
	0= 1=
	0= 1=
	0= 1=
	0= 1=
	0= 1=
	0= 1=
	0= 1=

PKC 07.02.25

07.02.25

07.02.25

17.02.2022

EUROCHEM

Tecnimont

17-ID-1401B_shB RAIN WATER PUMPS FOR 17-BS-143A/B

DCS LOGIC DIAGRAMS-AMMONIA UTILITIES

AMMONIA AND UREA PRODUCTION, KINGISEPP

3000 MTPD AMMONIA

TECNIMONT IDENTIFICATION CODE	
Document Number	Revision
4124-JK-DD-217000010	03
Sheet 464 next 470	
Sh.Rev. 01	
CUSTOMER IDENTIFICATION CODE	
-	03

INPUT

Logic Status	TAG
0= 1=	
0= 1=	
0= 1=	
0= 1=	
0= 1=	
0= 1=	
0= 1=	
0= 1=	
0= 1=	
0= 1=	
0= 1=	
0= 1=	
0= 1=	

DCS SOFTWARE

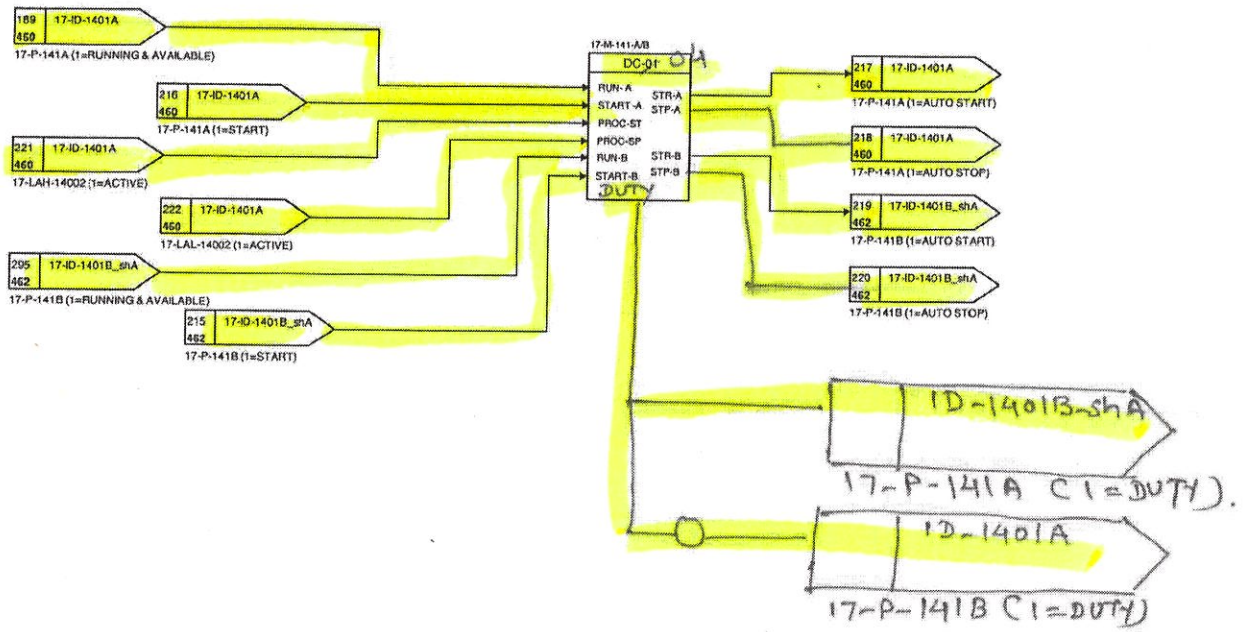

OUTPUT

TAG	Logic Status
	0= 1=
	0= 1=
	0= 1=
	0= 1=
	0= 1=
	0= 1=
	0= 1=
	0= 1=
	0= 1=
	0= 1=
	0= 1=
	0= 1=
	0= 1=

07.02.25

07.02.25

07.02.25

17.02.2022

EUROCHEM

Tecnimont

17-ID-1402A RAIN WATER RETENTION BASIN PUMPS FOR 17-BS-144

DCS LOGIC DIAGRAMS-AMMONIA UTILITIES

AMMONIA AND UREA PRODUCTION, KINGISEPP

3000 MTPD AMMONIA

TECNIMONT IDENTIFICATION CODE	
Document Number	Revision
4124-JK-DD-217000010	03
Sheet 470 next 472	
Sh.Rev. 02	
CUSTOMER IDENTIFICATION CODE	
-	03

INPUT

Logic Status	TAG
0= 1=	
0= NOT RUNNING 1= RUNNING	17-XS -M144 -A MCC DI
0= 1=	
0= NOT AVLB 1= AVAILABLE	17-XSA -M144 -A MCC DI
0= 1=	
0= 1=	
0= LOCAL 1= REMOTE	17-XSR -M144 -A MCC DI
0= NORMAL 1= TRIP	17-XST-M144-AOR DCS SDI ESD
0= TRIP 1= NORMAL	17-TSH -M144A Field DI-R
0= TRIP 1= NORMAL	17-XSL -M144A Field DI
0= 1=	17-LT -14006 Field AI
0= 1=	
0= 1=	

DCS SOFTWARE

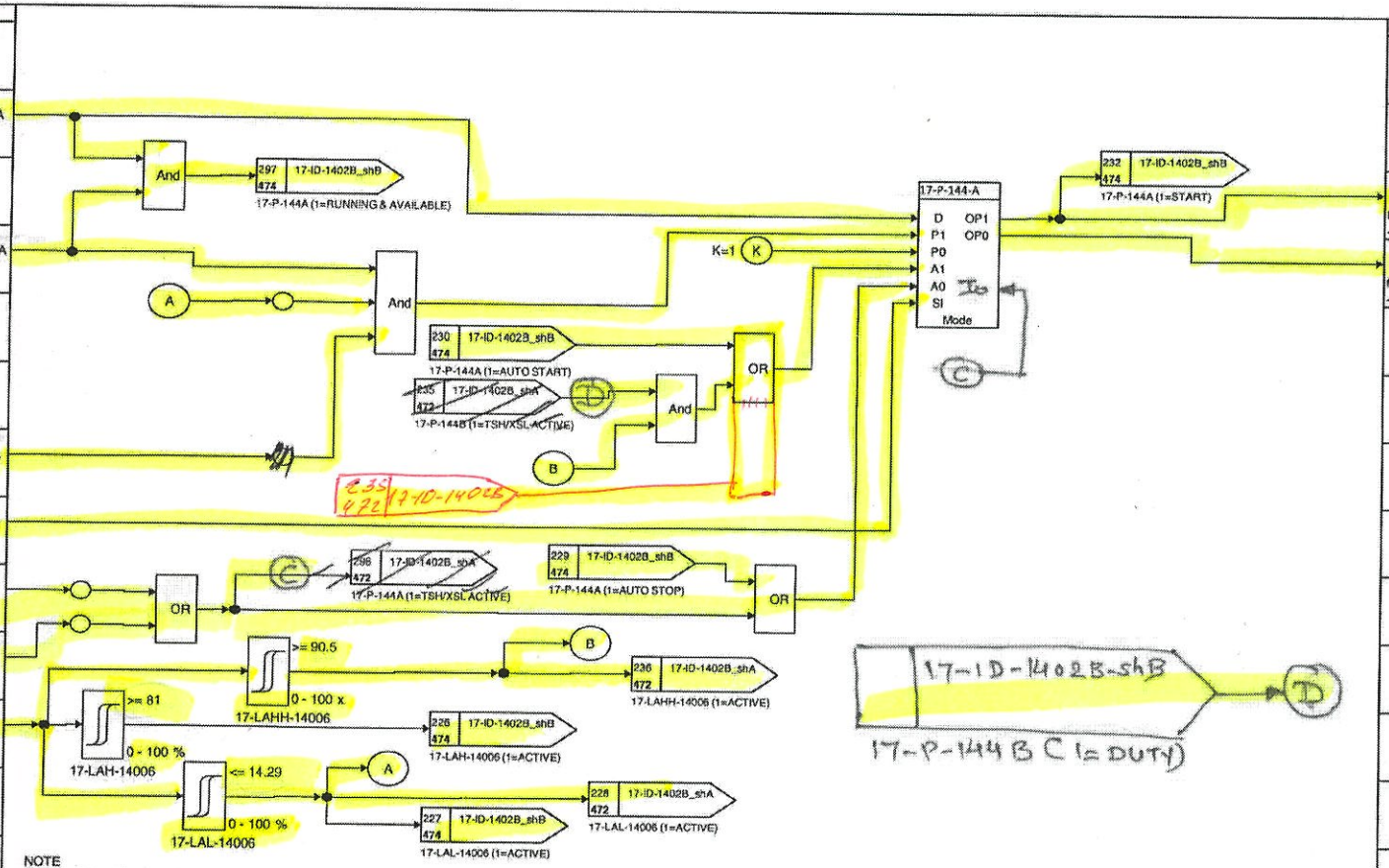

NOTE
First start of the pump is managed by operator through manual start from FIELD. Main pump is selected by operator

P&ID:4124-XZ-DM-21714002

OUTPUT

TAG	Logic Status
	0= 1=
	0= 1=
17-XYST -M144-A MCC DO	0= NO ACTION 1= START
17-XYSP -M144-A MCC DO	0= STOP 1= NO ACTION
	0= 1=
	0= 1=
	0= 1=
	0= 1=
	0= 1=
	0= 1=
	0= 1=
	0= 1=
	0= 1=

10.02.25

PKC 10.02.25

10.02.25

17.02.2022

EUROCHEM

Tecnimont

17-ID-1402B_shA RAIN WATER RETENTION BASIN PUMPS FOR 17-BS-144

DCS LOGIC DIAGRAMS-AMMONIA UTILITIES

AMMONIA AND UREA PRODUCTION, KINGISEPP

3000 MTPD AMMONIA

TECNIMONT IDENTIFICATION CODE	
Document Number	Revision
4124-JK-DD-217000010	03
Sheet 472 next 474	
Sh.Rev. 02	
CUSTOMER IDENTIFICATION CODE	
-	03

INPUT

Logic Status	TAG
0= 1=	
0= NOT RUNNING 1= RUNNING	17-XS -M144 -B MCC DI
0= 1=	
0= NOT AVLB 1= AVAILABLE	17-XSA -M144 -B MCC DI
0= 1=	
0= 1=	
0= LOCAL 1= REMOTE	17-XSR -M144 -B MCC DI
0= NORMAL 1= TRIP	17-XST -M144-BOR DCS SDI ESD
0= TRIP 1= NORMAL	17-TSH -M144B Field DI-R
0= TRIP 1= NORMAL	17-XSL -M144B Field DI
0= 1=	
0= 1=	
0= 1=	

DCS SOFTWARE

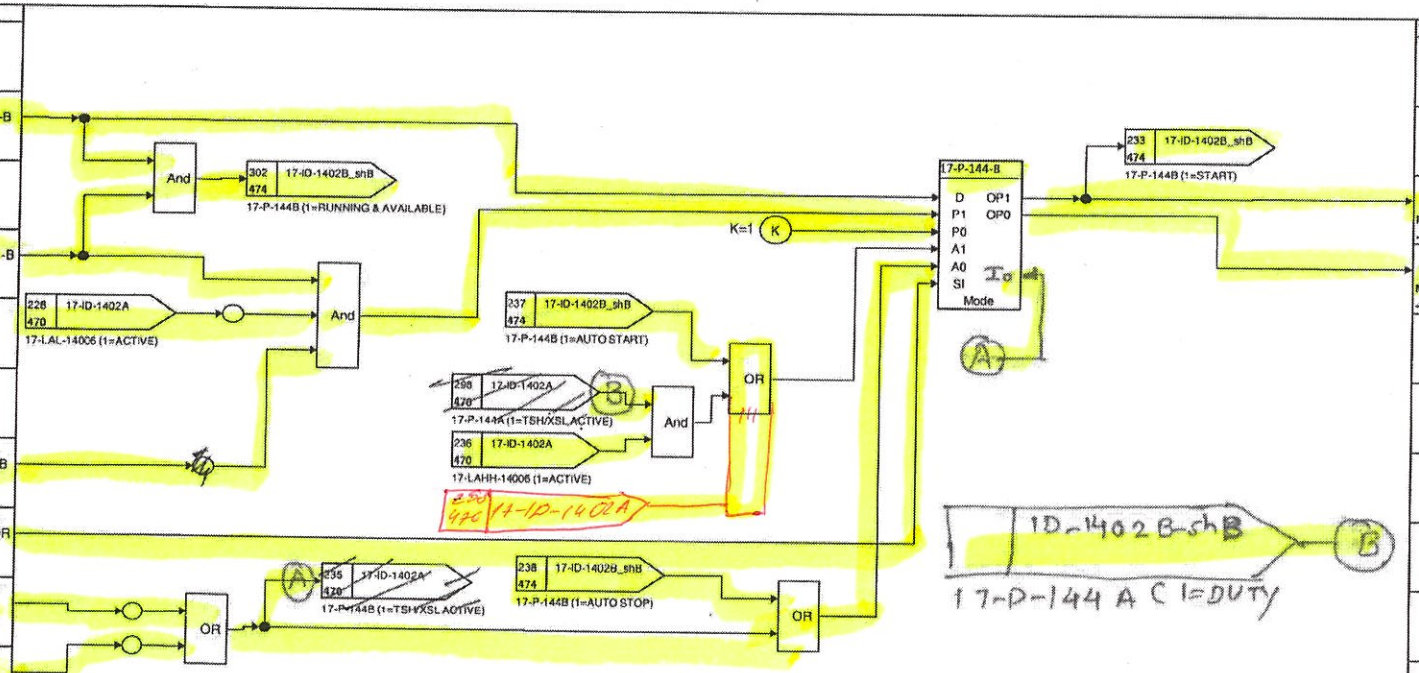

NOTE:
First start of the pump is managed by operator through manual start from FIELD. Main pump is selected by operator

P&ID:4124-XZ-DM-21714002

OUTPUT

TAG	Logic Status
	0= 1=
	0= 1=
17-XYST -M144-B MCC DO	0= NO ACTION 1= START
17-XYSP -M144-B MCC DO	0= STOP 1= NO ACTION
	0= 1=
	0= 1=
	0= 1=
	0= 1=
	0= 1=
	0= 1=
	0= 1=
	0= 1=
	0= 1=
	0= 1=

10.02.25 ГКС 10.02.25 10.02.25 11.2.22 17.02.2022

EUROCHEM	17-ID-1402B_shB RAIN WATER RETENTION BASIN PUMPS FOR 17-BS-144 DCS LOGIC DIAGRAMS-AMMONIA UTILITIES AMMONIA AND UREA PRODUCTION, KINGISEPP	TECNIMONT IDENTIFICATION CODE Document Number 4124-JK-DD-217000010 Revision 03 Sheet 474 next 480 Sh.Rev. 01
Tecnimont	3000 MTPD AMMONIA	CUSTOMER IDENTIFICATION CODE - 03

INPUT — DCS SOFTWARE — OUTPUT

Logic Status	TAG
0= 1=	
0= 1=	
0= 1=	
0= 1=	
0= 1=	
0= 1=	
0= 1=	
0= 1=	
0= 1=	
0= 1=	
0= 1=	
0= 1=	
0= 1=	

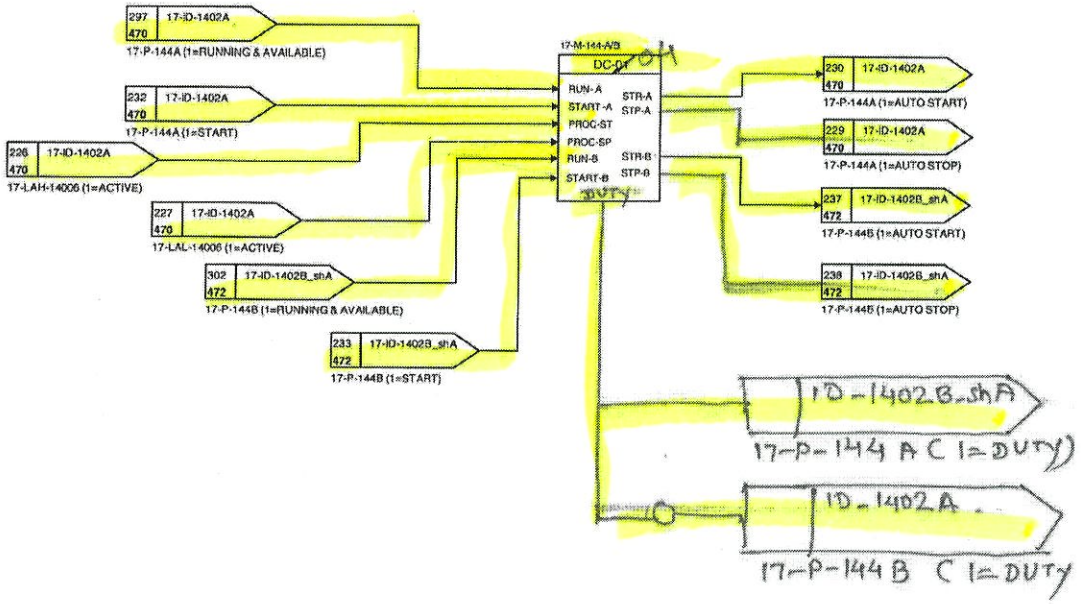

TAG	Logic Status
	0= 1=
	0= 1=
	0= 1=
	0= 1=
	0= 1=
	0= 1=
	0= 1=
	0= 1=
	0= 1=
	0= 1=
	0= 1=
	0= 1=
	0= 1=

10.02.22 PKC 10.02.26 10.02.26 1/2/22 17.02.2022 Eurochem M

EUROCHEM

Tecnimont

17-ID-1403A CLEAN RAIN WATER OVERFLOW PUMPS

DCS LOGIC DIAGRAMS-AMMONIA UTILITIES

AMMONIA AND UREA PRODUCTION, KINGISEPP

3000 MTPD AMMONIA

TECNIMONT IDENTIFICATION CODE	
Document Number	Revision
4124-JK-DD-217000010	03
Sheet 480 next 482	
Sh.Rev. 02	
CUSTOMER IDENTIFICATION CODE	
-	03

INPUT

Logic Status	TAG
0= 1=	
0= NOT RUNNING 1= RUNNING	17-XS -M145 -A MCC DI
0= 1=	
0= NOT AVLB 1= AVAILABLE	17-XSA -M145 -A MCC DI
0= 1=	
0= 1=	
0= LOCAL 1= REMOTE	17-XSR -M145 -A MCC DI
0= NORMAL 1= TRIP	17-XST -M145-AOR DCS SDI ESD
0= TRIP 1= NORMAL	17-TSH -M145A Field DI-R
0= TRIP 1= NORMAL	17-XSL -M145A Field DI
0= 1=	17-LT -14022 Field AI
0= 1=	
0= 1=	

DCS SOFTWARE

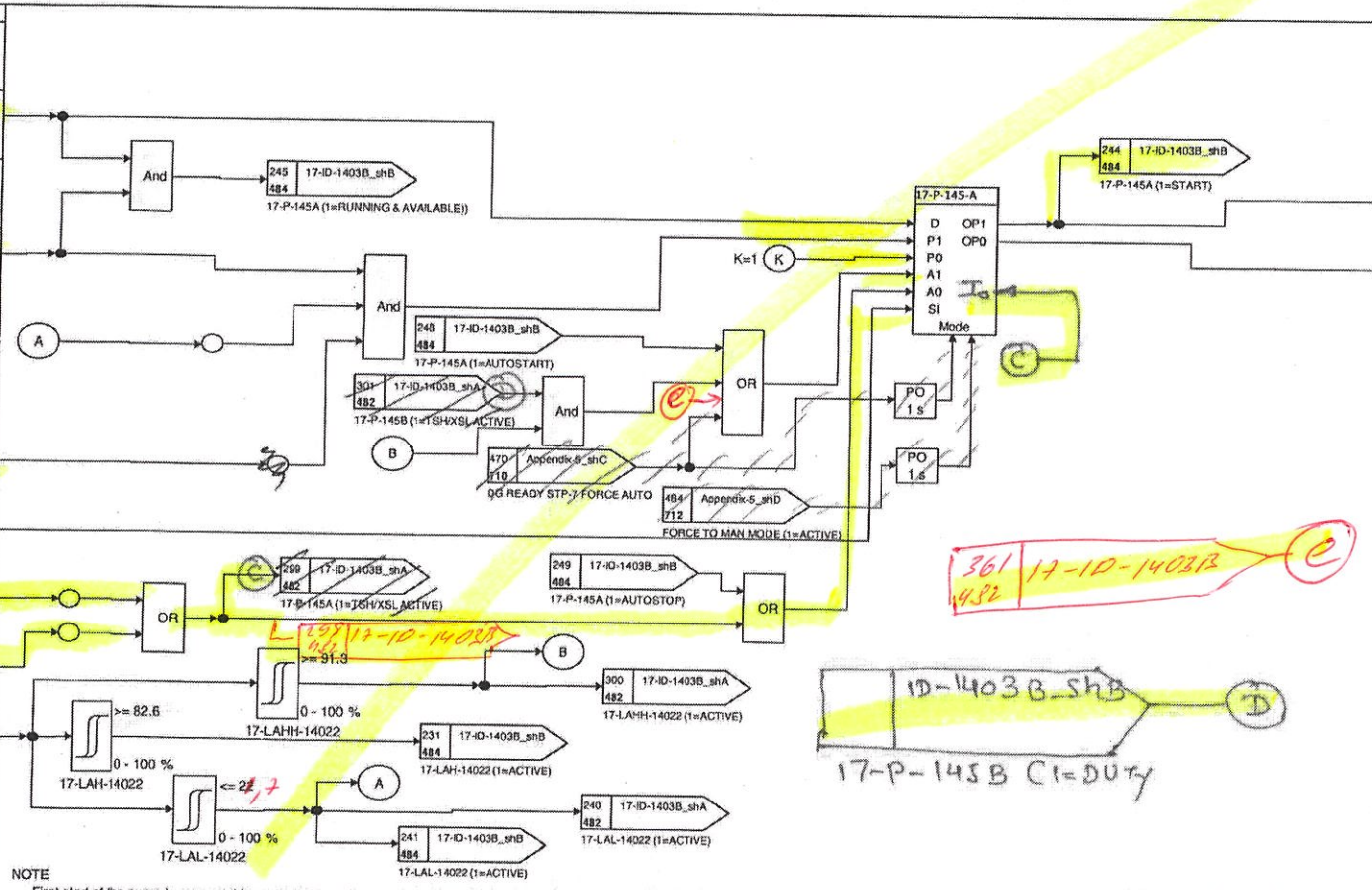

NOTE

First start of the pump is managed by operator through manual start from DCS. Main pump is selected by operator

P&ID: 4124-XZ-DM-21714002

OUTPUT

TAG	Logic Status
	0= 1=
	0= 1=
17-XYST -M145-A MCC DO	0= NO ACTION 1= START
17-XYSP -M145-A MCC DO	0= STOP 1= NO ACTION
	0= 1=
	0= 1=
	0= 1=
	0= 1=
	0= 1=
	0= 1=
	0= 1=
	0= 1=
	0= 1=

21.02.25

ПКС 21.02.25

100225

11/2/22

17.02.2022

Eurochem

EuroChem

Tecnimont

17-ID-1403B_shA CLEAN RAIN WATER OVERFLOW PUMPS

DCS LOGIC DIAGRAMS-AMMONIA UTILITIES

AMMONIA AND UREA PRODUCTION, KINGISEPP

3000 MTPD AMMONIA

TECNIMONT IDENTIFICATION CODE	
Document Number	Revision
4124-JK-DD-217000010	03
Sheet 482 next 484	
Sh.Rev. 02	
CUSTOMER IDENTIFICATION CODE	
-	03

INPUT

Logic Status	TAG
0= 1=	
0= NOT RUNNING 1= RUNNING	17-XS -M145 -B MCC DI -
0= 1=	
0= NOT AVLB 1= AVAILABLE	17-XSA -M145 -B MCC DI -
0= 1=	
0= 1=	
0= LOCAL 1= REMOTE	17-XSR -M145 -B MCC DI -
0= NORMAL 1= TRIP	17-XST -M145-BOR DCS SDI ESD
0= TRIP 1= NORMAL	17-TSH -M145B Field DI-R -
0= TRIP 1= NORMAL	17-XSL -M145B Field DI - 02
0= 1=	
0= 1=	
0= 1=	

DCS SOFTWARE

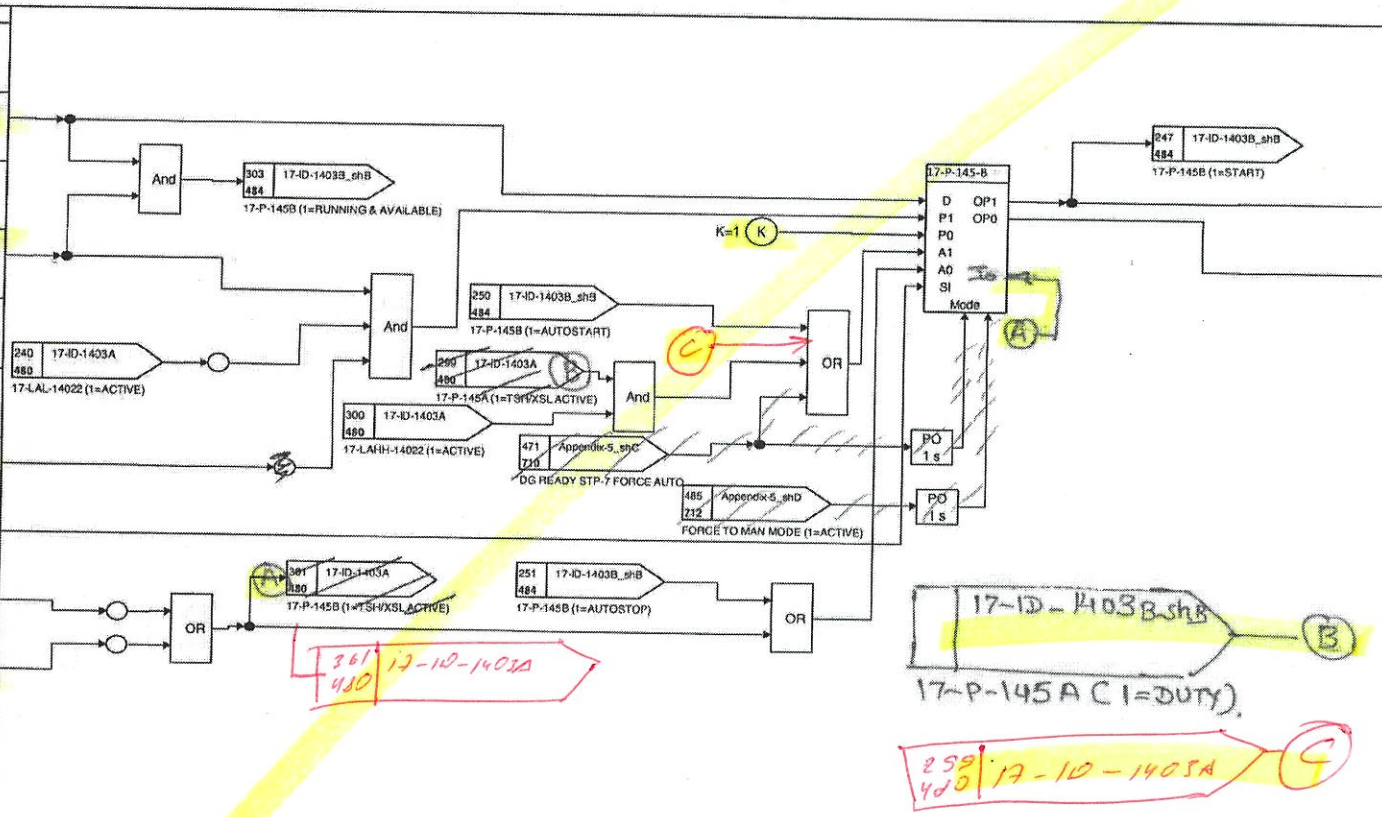

NOTE:
First start of the pump is managed by operator through manual start from DCS. Main pump is selected by operator

P&ID:4124-XZ-DM-21714002

OUTPUT

TAG	Logic Status
	0= 1=
	0= 1=
17-XYST -M145-B MCC DO -	0= NO ACTION 1= START
17-XYSP -M145-B MCC DO -	0= STOP 1= NO ACTION
	0= 1=
	0= 1=
	0= 1=
	0= 1=
	0= 1=
	0= 1=
	0= 1=
	0= 1=

21.02.25

21.02.25

10.02.25

17.02.2022

Eurochem

EUROCHEM	17-ID-1403B_shB CLEAN RAIN WATER OVERFLOW PUMPS DCS LOGIC DIAGRAMS-AMMONIA UTILITIES AMMONIA AND UREA PRODUCTION, KINGISEPP	TECNIMONT IDENTIFICATION CODE Document Number 4124-JK-DD-217000010 Revision 03 Sheet 484 next 490 Sh.Rev. 01
Tecnimont	3000 MTPD AMMONIA	CUSTOMER IDENTIFICATION CODE - 03

INPUT | DCS SOFTWARE | OUTPUT

Logic Status	TAG
0= 1=	
0= 1=	
0= 1=	
0= 1=	
0= 1=	
0= 1=	
0= 1=	
0= 1=	
0= 1=	
0= 1=	
0= 1=	
0= 1=	
0= 1=	

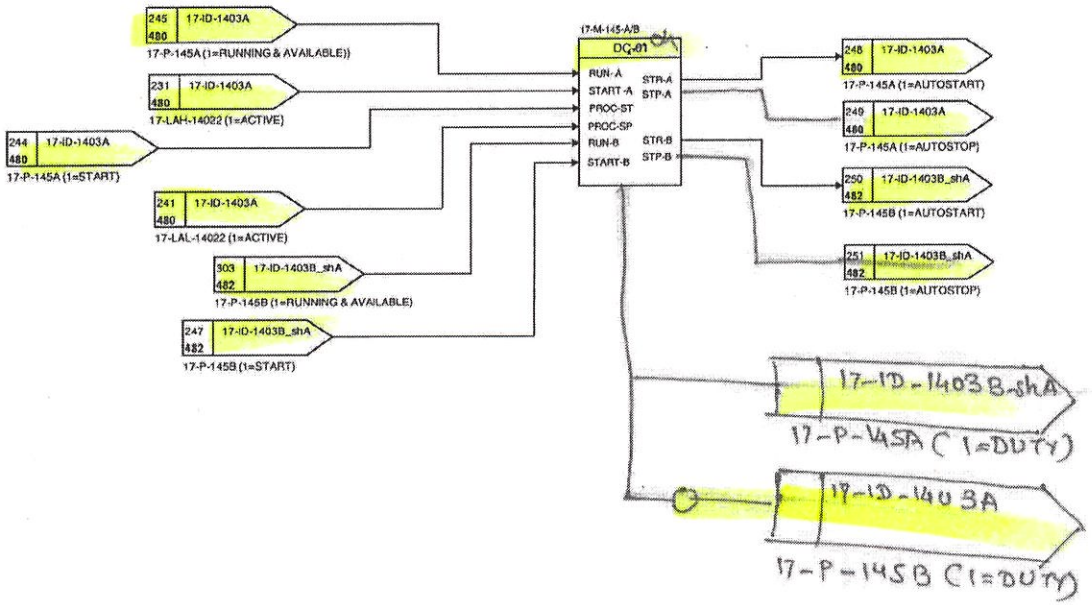

TAG	Logic Status
	0= 1=
	0= 1=
	0= 1=
	0= 1=
	0= 1=
	0= 1=
	0= 1=
	0= 1=
	0= 1=
	0= 1=
	0= 1=
	0= 1=
	0= 1=

21.02.25 ГКС 21.02.25 10.02.25 11/2/22 17.02.2022 Eurochem

EUROCHEM

Tecnimont

17-ID-1701_shA GLYCOL WATER CIRCULATING PUMPS START / AUTOSTART

DCS LOGIC DIAGRAMS-AMMONIA UTILITIES

AMMONIA AND UREA PRODUCTION, KINGISEPP

3000 MTPD AMMONIA

TECNIMONT IDENTIFICATION CODE	
Document Number	Revision
4124-JK-DD-217000010	03
Sheet 490	next 492
Sh.Rev. 02	
CUSTOMER IDENTIFICATION CODE	
-	03

INPUT

Logic Status	TAG
0= 1=	
0= NOT RUNNING 1= RUNNING	17-XS -M171 -A MCC DI -
0= 1=	
0= NOT AVLB 1= AVAILABLE	17-XSA -M171 -A MCC DI -
0= 1=	
0= 1=	
0= LOCAL 1= REMOTE	17-XSR -M171 -A MCC DI -
0= NORMAL 1= TRIP	17-XST-M171-AOR DCS SDI ESD
0= 1=	
0= 1=	17-PT -17120 Field AI-R -
0= 1=	
0= 1=	
0= 1=	

DCS SOFTWARE

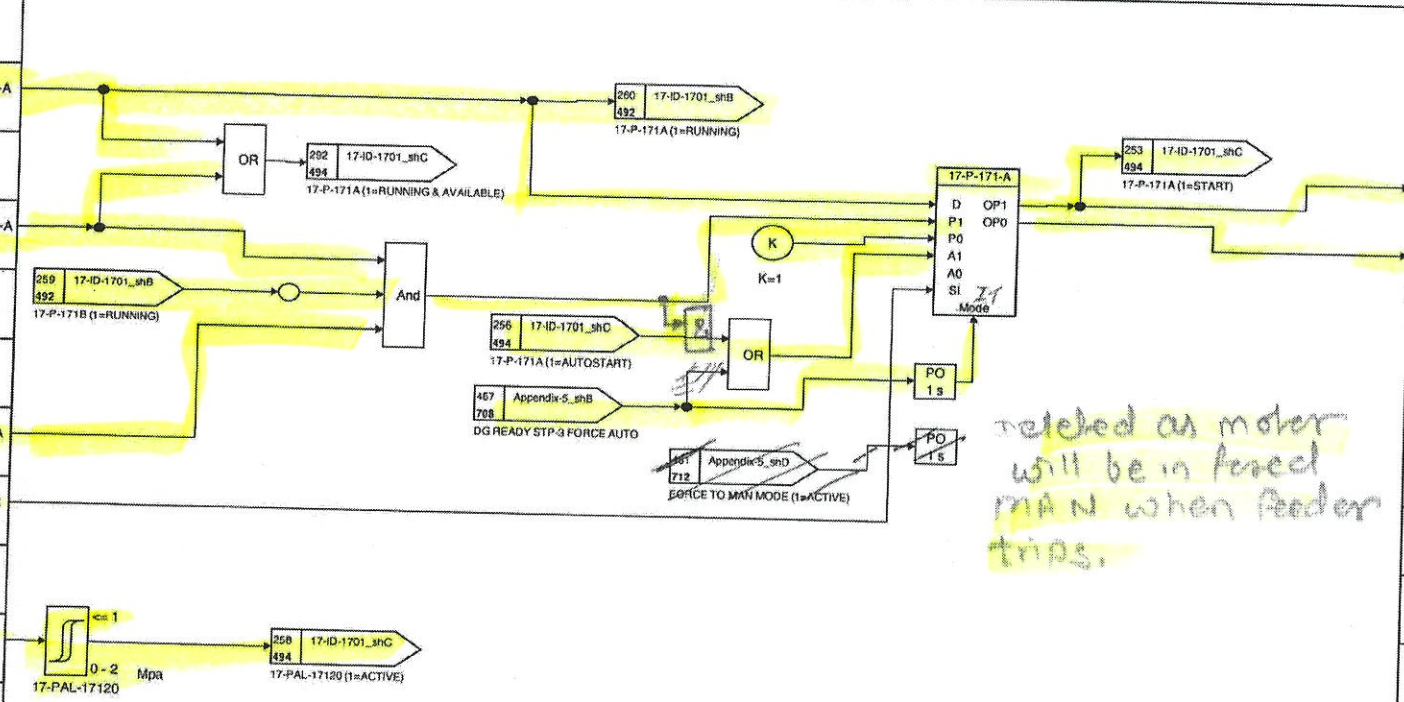

deleted as motor will be in fixed MAN when feeder trips.

P&ID:4124-XZ-DM-21717101

OUTPUT

TAG	Logic Status
	0= 1=
	0= 1=
17-XYST -M171 -A MCC DO -	0= NO ACTION 1= START
17-XYSP -M171 -A MCC DO -	0= STOP 1= NO ACTION
	0= 1=
	0= 1=
	0= 1=
	0= 1=
	0= 1=
	0= 1=
	0= 1=
	0= 1=
	0= 1=

13.02.25 13.02.25 14/2/22 PKC 13.02.25 17.02.2022

EuroChem

Tecnimont

17-ID-1701_shB GLYCOL WATER CIRCULATING PUMPS START / AUTOSTART

DCS LOGIC DIAGRAMS-AMMONIA UTILITIES

AMMONIA AND UREA PRODUCTION, KINGISEPP

3000 MTPD AMMONIA

TECNIMONT IDENTIFICATION CODE	
Document Number	Revision
4124-JK-DD-217000010	03
Sheet 492 next 494	
Sh.Rev. 02	
CUSTOMER IDENTIFICATION CODE	
-	03

INPUT

Logic Status	TAG
0= 1=	
0= NOT RUNNING 1= RUNNING	17-XS -M171 -B MCC DI -
0= 1=	
0= NOT AVLB 1= AVAILABLE	17-XSA -M171 -B MCC DI -
0= 1=	
0= 1=	
0= LOCAL 1= REMOTE	17-XSR -M171 -B MCC DI -
0= NORMAL 1= TRIP	17-XST-M171-BOR DCS SDI ESD
0= 1=	
0= 1=	
0= 1=	
0= 1=	
0= 1=	

DCS SOFTWARE

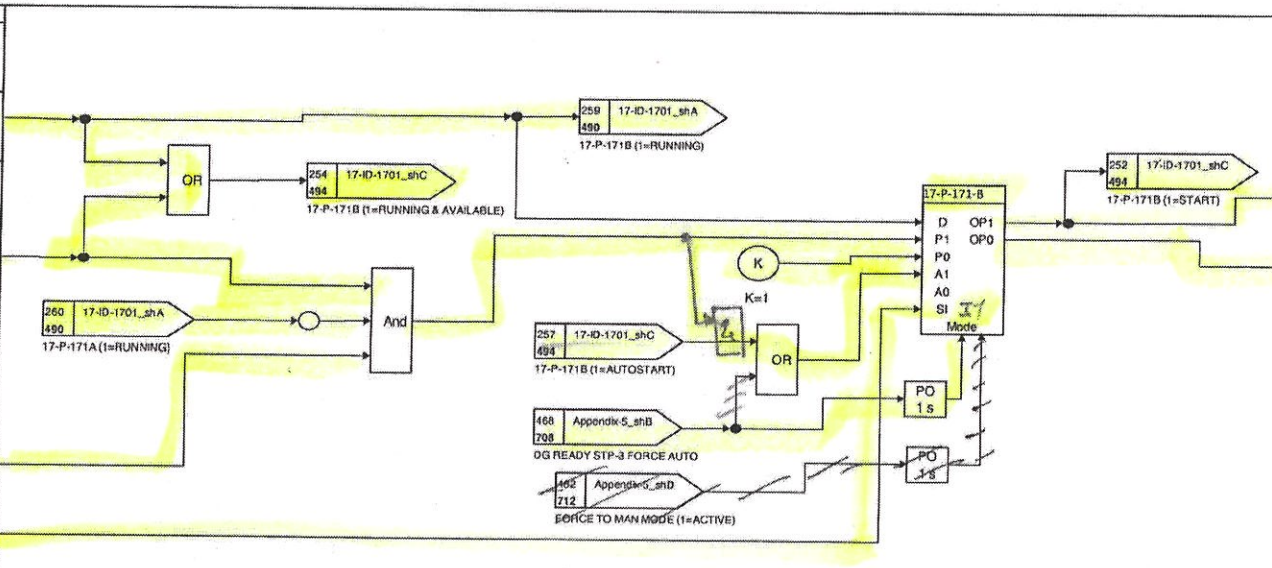

OUTPUT

TAG	Logic Status
	0= 1=
	0= 1=
17-XYST -M171 -B MCC DO -	0= NO ACTION 1= START
17-XYSP -M171 -B MCC DO -	0= STOP 1= NO ACTION
	0= 1=
	0= 1=
	0= 1=
	0= 1=
	0= 1=
	0= 1=
	0= 1=
	0= 1=
	0= 1=

ГКС 13.02.25

13.02.25

13.02.25

14/2/22

17.02.2022

Eurochem

EUROCHEM

Tecnimont

17-ID-1701_shC GLYCOL WATER CIRCULATING PUMPS START / AUTOSTART

DCS LOGIC DIAGRAMS-AMMONIA UTILITIES

AMMONIA AND UREA PRODUCTION, KINGISEPP

3000 MTPD AMMONIA

TECNIMONT IDENTIFICATION CODE	
Document Number	Revision
4124-JK-DD-217000010	03
Sheet 494	next 500
Sh.Rev. 01	
CUSTOMER IDENTIFICATION CODE	
-	03

INPUT

Logic Status	TAG
0= 1=	
0= 1=	
0= 1=	
0= 1=	
0= 1=	
0= 1=	
0= 1=	
0= 1=	
0= 1=	
0= 1=	
0= 1=	
0= 1=	

DCS SOFTWARE

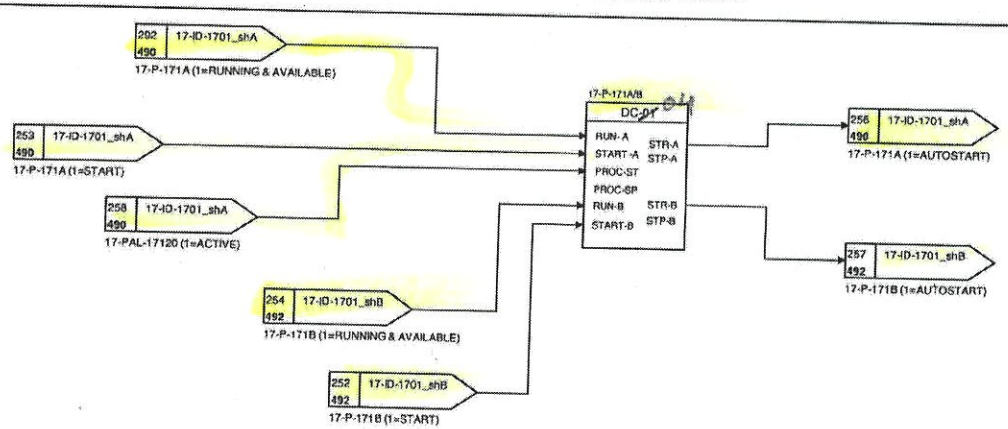

OUTPUT

TAG	Logic Status
	0= 1=
	0= 1=
	0= 1=
	0= 1=
	0= 1=
	0= 1=
	0= 1=
	0= 1=
	0= 1=
	0= 1=
	0= 1=
	0= 1=
	0= 1=

13.02.25 13.02.25 14/2/22 FKC 13.02.25 17.02.2022 Eurochem

EUROCHEM

Tecnimont

17-ID-1702 GLYCOL WATER FILLING PUMPS START

DCS LOGIC DIAGRAMS-AMMONIA UTILITIES

AMMONIA AND UREA PRODUCTION, KINGISEPP

3000 MTPD AMMONIA

TECNIMONT IDENTIFICATION CODE	
Document Number	Revision
4124-JK-DD-217000010	03
Sheet 500 next 510	
Sh.Rev. 02	
CUSTOMER IDENTIFICATION CODE	
-	03

INPUT

Logic Status	TAG
0= 1=	
0= NOT RUNNING 1= RUNNING	17-XS -M172 MCC DI -
0= NOT AVLB 1= AVAILABLE	17-XSA -M172 MCC DI -
0= LOCAL 1= REMOTE	17-XSR -M172 MCC DI -
0= 1=	
0= 1=	17-LT -17102 Field AI -
0= 1=	
0= 1=	
0= 1=	
0= 1=	
0= 1=	
0= 1=	
0= 1=	
0= 1=	
0= 1=	

DCS SOFTWARE

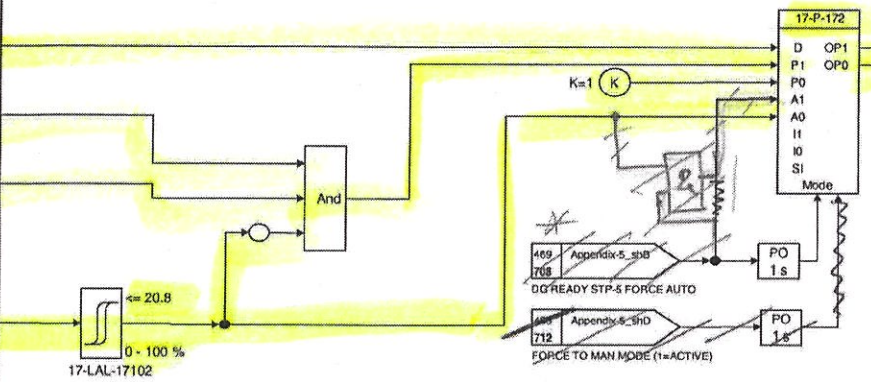

DG start removed as per EnW process request

OUTPUT

TAG	Logic Status
	0= 1=
17-XYST -M172 MCC DO -	0= NO ACTION 1= START
17-XYSP -M172 MCC DO -	0= STOP 1= NO ACTION
	0= 1=
	0= 1=
	0= 1=
	0= 1=
	0= 1=
	0= 1=
	0= 1=
	0= 1=
	0= 1=
	0= 1=

Note

Interlock activation alarm shall be generated based onactivatino of 17-LAH-02084 or 17-LAL-02084. Interlock is auto reset

P&ID:4124-XZ-DM-21717101

13.01.25

13.02.25

PKC 13.02.25

14/2/22

17.02.2022

Eurochem

EUROCHEM

Tecnimont

17-ID-1703 GLYCOL WATER OVERFLOW ON-OFF VALVE

DCS LOGIC DIAGRAMS-AMMONIA UTILITIES

AMMONIA AND UREA PRODUCTION, KINGISEPP

3000 MTPD AMMONIA

TECNIMONT IDENTIFICATION CODE	
Document Number	Revision
4124-JK-DD-217000010	03
Sheet 510 next 520	
Sh.Rev. 02	
CUSTOMER IDENTIFICATION CODE	
-	03

INPUT

Logic Status	TAG
0= 1=	
0= NOT OPEN 1= OPEN	17-XZSH -17101 Field DI -
0= NOT CLOSED 1= CLOSED	17-XZSL -17101 Field DI -
0= 1=	
0= 1=	17-LT -17101 Field AI -
0= 1=	
0= 1=	
0= 1=	
0= 1=	
0= 1=	
0= 1=	
0= 1=	
0= 1=	
0= 1=	

DCS SOFTWARE

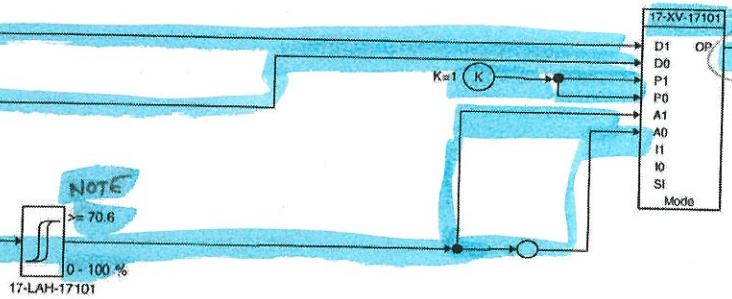

OUTPUT

TAG	Logic Status
	0= 1=
17-XY -17101 Field DO -	0= OPEN 1= CLOSE
	0= 1=
	0= 1=
	0= 1=
	0= 1=
	0= 1=
	0= 1=
	0= 1=
	0= 1=
	0= 1=
	0= 1=
	0= 1=
	0= 1=

Note :- The deadband of 3% shall be considered so that the valve will be automatically closed when LAH is not active (deadband to be reconfigured on site).

13.02.25

13.02.25 PKC 13.02.25

22.02.2022

EUROCHEM

Tecnimont

17-ID-1404A CONTAMINATED WATER PUMP FOR 17-BS-143AB

DCS LOGIC DIAGRAMS-AMMONIA UTILITIES

AMMONIA AND UREA PRODUCTION, KINGISEPP

3000 MTPD AMMONIA

TECNIMONT IDENTIFICATION CODE	
Document Number	Revision
4124-JK-DD-217000010	03
Sheet 520 next 530	
Sh.Rev. 02	
CUSTOMER IDENTIFICATION CODE	
-	03

INPUT

Logic Status	TAG
0= 1=	
0= NOT RUNNING 1= RUNNING	17-XS -M142 -A MCC DI -
0= NOT AVLB 1= AVAILABLE	17-XSA -M142 -A MCC DI -
0= TRIP 1= NORMAL	17-TSH -M142A Field DI -
0= TRIP 1= NORMAL	17-XSL -M142A Field DI -
0= 1=	
0= NORMAL 1= TRIP	17-XST -M142-AOR DCS SDI ESD
0= 1=	
0= 1=	
0= 1=	
0= 1=	
0= 1=	
0= 1=	

DCS SOFTWARE

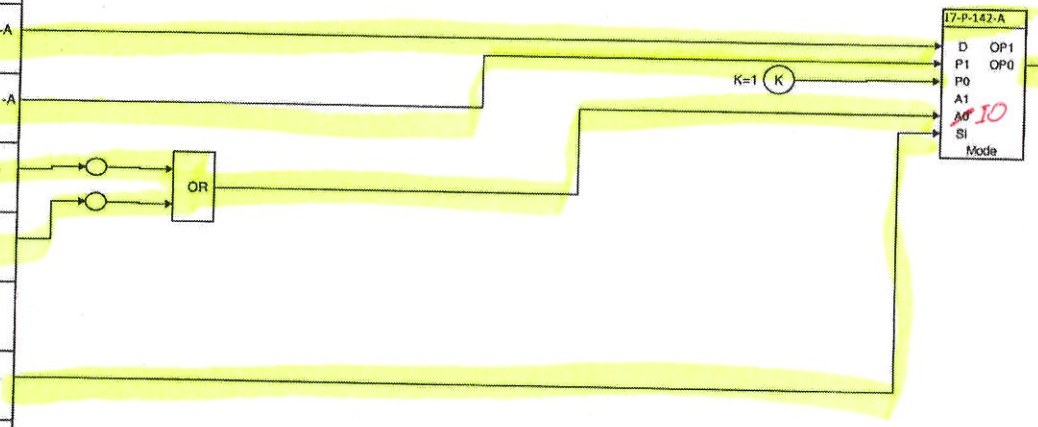

P&ID: 4124-XZ-DM-21714001

OUTPUT

TAG	Logic Status
	0= 1=
17-XYSP -M142 -A MCC DO -	0= STOP 1= NO ACTION
	0= 1=
	0= 1=
	0= 1=
	0= 1=
	0= 1=
	0= 1=
	0= 1=
	0= 1=
	0= 1=
	0= 1=
	0= 1=
	0= 1=

21.02.25 ПКС 21.02.25 21.02.25 11/2/22 18.02.2022

EUROCHEM

Tecnimont

17-ID-1404B CONTAMINATED WATER PUMP FOR 17-BS-143AB

DCS LOGIC DIAGRAMS-AMMONIA UTILITIES

AMMONIA AND UREA PRODUCTION, KINGISEPP

3000 MTPD AMMONIA

TECNIMONT IDENTIFICATION CODE	
Document Number	Revision
4124-JK-DD-217000010	03
Sheet 530	next 540
Sh.Rev. 02	
CUSTOMER IDENTIFICATION CODE	
-	03

INPUT

Logic Status	TAG
0= 1=	
0= NOT RUNNING 1= RUNNING	17-XS -M142 -B MCC DI -
0= NOT AVLB 1= AVAILABLE	17-XSA -M142 -B MCC DI -
0= TRIP 1= NORMAL	17-TSH -M142B Field DI -
0= TRIP 1= NORMAL	17-XSL -M142B Field DI -
0= 1=	
0= NORMAL 1= TRIP	17-XST-M142-BOR DCS SDI ESD
0= 1=	
0= 1=	
0= 1=	
0= 1=	
0= 1=	
0= 1=	

DCS SOFTWARE

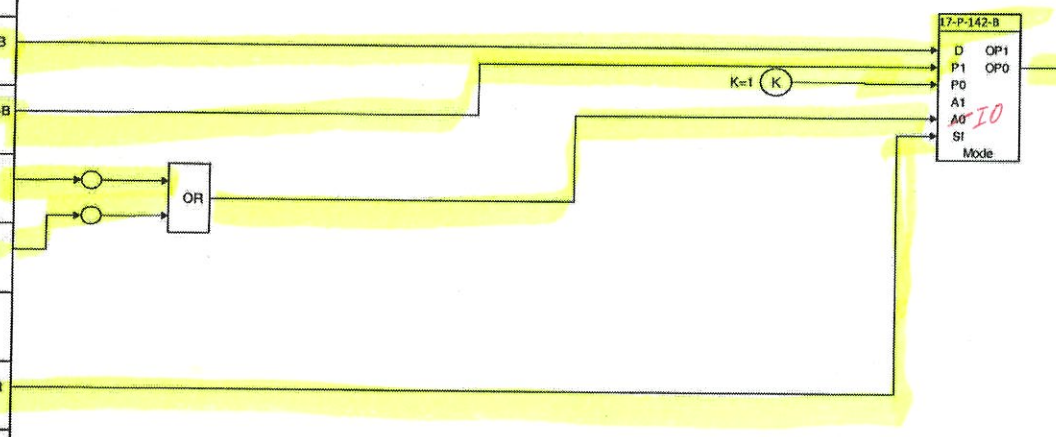

OUTPUT

TAG	Logic Status
	0= 1=
17-XYSP -M142 -B MCC DO -	0= STOP 1= NO ACTION
	0= 1=
	0= 1=
	0= 1=
	0= 1=
	0= 1=
	0= 1=
	0= 1=
	0= 1=
	0= 1=
	0= 1=
	0= 1=
	0= 1=

P&ID: 4124-XZ-DM-21714001

21.02.25 PKC 21-02-25 21.02.25 11/2/22 18.02.2022

EUROCHEM

Tecnimont

17-ID-1405A K2 CLEANRAIN WATER LIFT STN1 17L140P140A

DCS LOGIC DIAGRAMS-AMMONIA UTILITIES

AMMONIA AND UREA PRODUCTION, KINGISEPP

3000 MTPD AMMONIA

TECNIMONT IDENTIFICATION CODE	
Document Number	Revision
4124-JK-DD-217000010	03
Sheet 540	next 542
Sh.Rev. 02	
CUSTOMER IDENTIFICATION CODE	
-	03

INPUT

Logic Status	TAG
0= 1=	
0= NOT RUNNING 1= RUNNING	17-XS -M140LP-A MCC DI -
0= 1=	
0= NOT AVLB 1= AVAILABLE	17-XSA -M140LP-A MCC DI -
0= 1=	
0= 1=	
0= LOCAL 1= REMOTE	17-XSR -M140LP-A MCC DI -
0= 1=	
0= TRIP 1= NORMAL	17-TSH -M140LPA Field DI -
0= TRIP 1= NORMAL	17-XSL -M140LPA Field DI -
0= 1=	17-LT -140025 Field AI -
0= 1=	
0= 1=	

DCS SOFTWARE

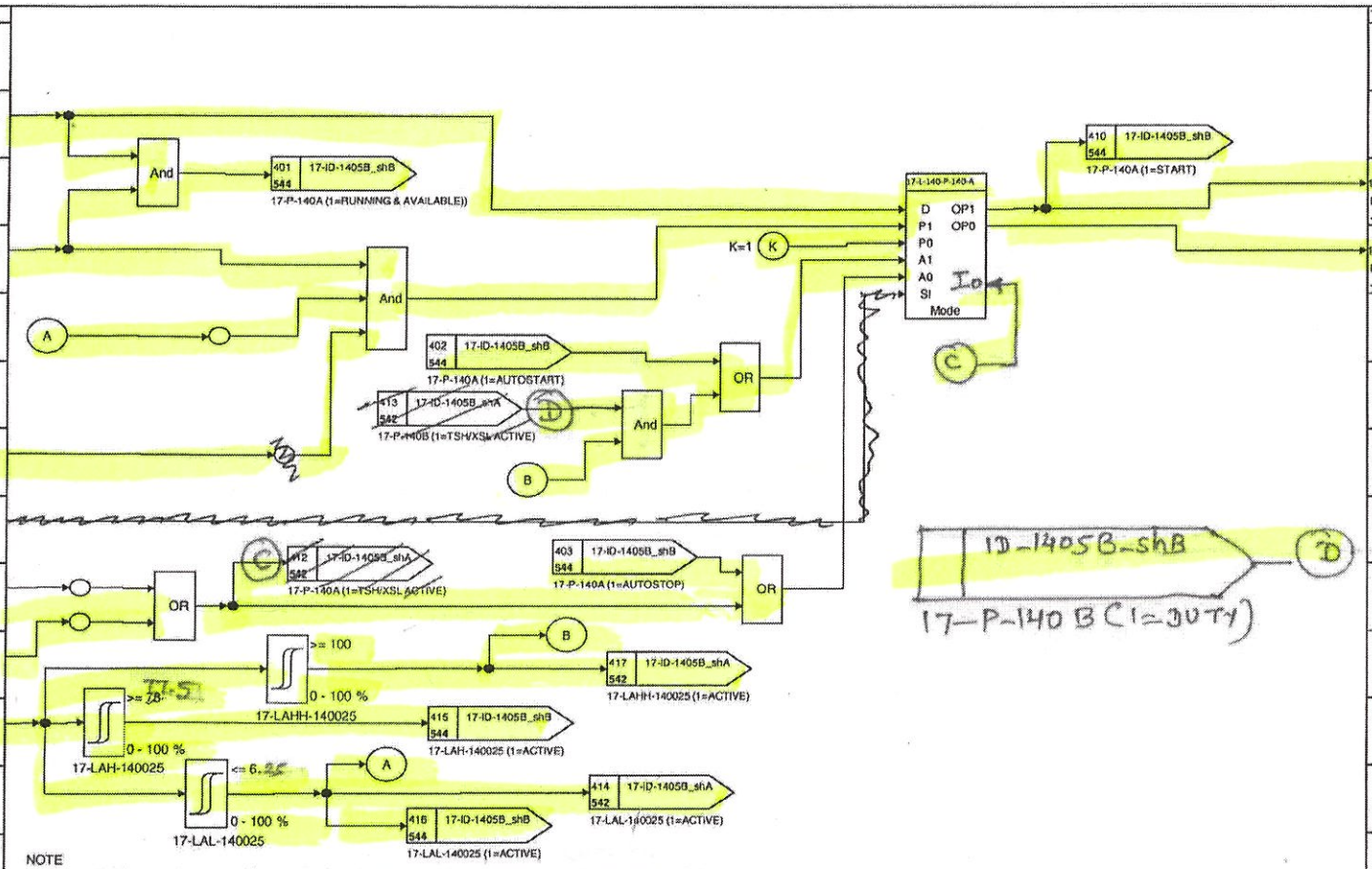

NOTE
First start of the pump is managed by operator through manual start from DCS. Main pump is selected by operator

OUTPUT

TAG	Logic Status
	0= 1=
	0= 1=
17-XYST -M140LP-A MCC DO -	0= NO ACTION 1= START
17-XYSP -M140LP-A MCC DO -	0= STOP 1= NO ACTION
	0= 1=
	0= 1=
	0= 1=
	0= 1=
	0= 1=
	0= 1=
	0= 1=
	0= 1=
	0= 1=

21.02.25 ГКС 21.02.25 21.02.25 17.02.2022

EUROCHEM

Tecnimont

17-ID-1405B_shA K2 CLEAN RAIN WATER LIFT STN1 17L140P140B

DCS LOGIC DIAGRAMS-AMMONIA UTILITIES

AMMONIA AND UREA PRODUCTION, KINGISEPP

3000 MTPD AMMONIA

TECNIMONT IDENTIFICATION CODE	
Document Number	Revision
4124-JK-DD-217000010	03
Sheet 542 next 544	
Sh.Rev. 01	
CUSTOMER IDENTIFICATION CODE	
-	03

INPUT

Logic Status	TAG
0= 1=	
0= NOT RUNNING 1= RUNNING	17-XS -M140LP-B MCC DI
0= 1=	
0= NOT AVLB 1= AVAILABLE	17-XSA -M140LP-B MCC DI
0= 1=	
0= 1=	
0= LOCAL 1= REMOTE	17-XSR -M140LP-B MCC DI
0= 1=	
0= TRIP 1= NORMAL	17-TSH -M140LPB Field DI
0= TRIP 1= NORMAL	17-XSL -M140LPB Field DI
0= 1=	
0= 1=	
0= 1=	

DCS SOFTWARE

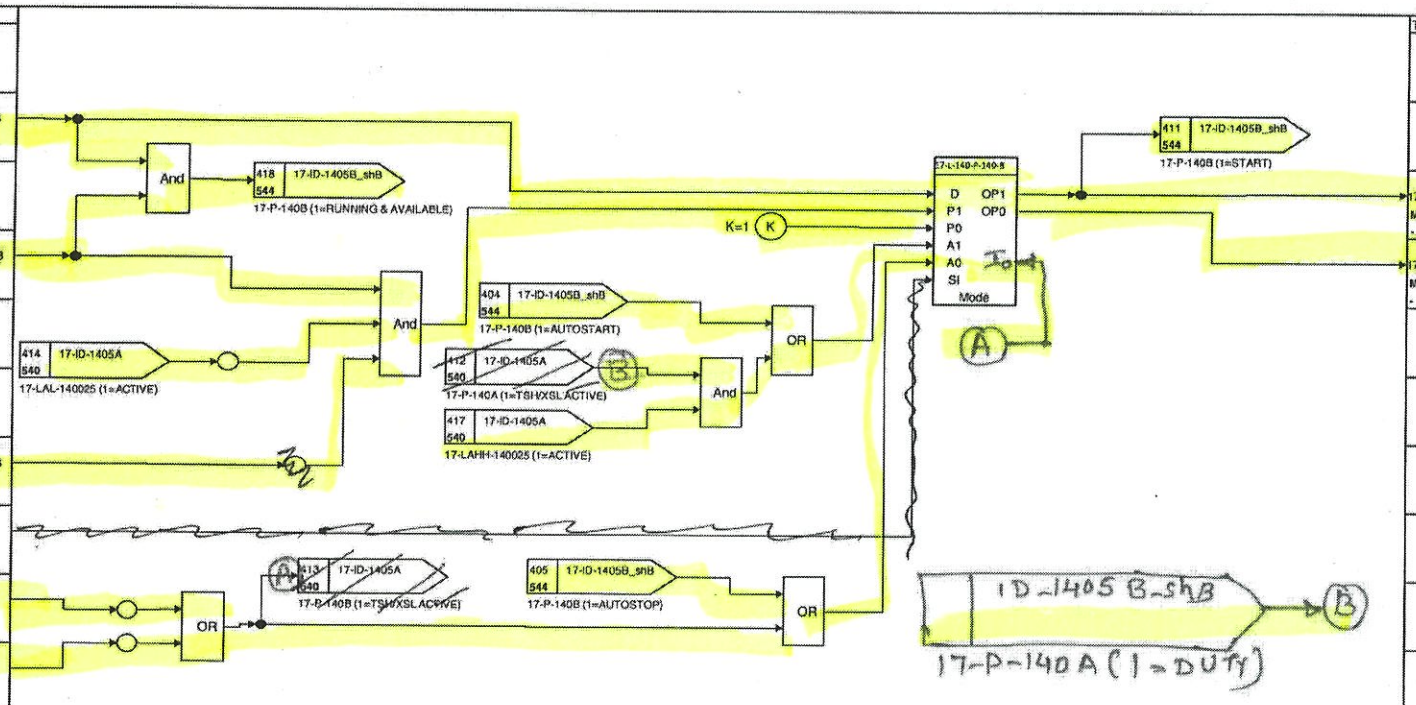

OUTPUT

TAG	Logic Status
	0= 1=
	0= 1=
17-XYST -M140LP-B MCC DO	0= NO ACTION 1= START
17-XYSP -M140LP-B MCC DO	0= STOP 1= NO ACTION
	0= 1=
	0= 1=
	0= 1=
	0= 1=
	0= 1=
	0= 1=
	0= 1=
	0= 1=
	0= 1=

NOTE:
First start of the pump is managed by operator through manual start from DCS. Main pump is selected by operator

21.02.25

21.02.25

17.02.2022

Eurochem

EUROCHEM

Tecnimont

17-ID-1405B_shB K2 CLEAN RAIN WATER LIFT STN1 17L140P140B

DCS LOGIC DIAGRAMS-AMMONIA UTILITIES

AMMONIA AND UREA PRODUCTION, KINGISEPP

3000 MTPD AMMONIA

TECNIMONT IDENTIFICATION CODE	
Document Number	Revision
4124-JK-DD-217000010	03
Sheet 544	next 550
Sh.Rev. 01	
CUSTOMER IDENTIFICATION CODE	
-	03

INPUT

Logic Status	TAG
0= 1=	
0= 1=	
0= 1=	
0= 1=	
0= 1=	
0= 1=	
0= 1=	
0= 1=	
0= 1=	
0= 1=	
0= 1=	
0= 1=	
0= 1=	
0= 1=	

DCS SOFTWARE

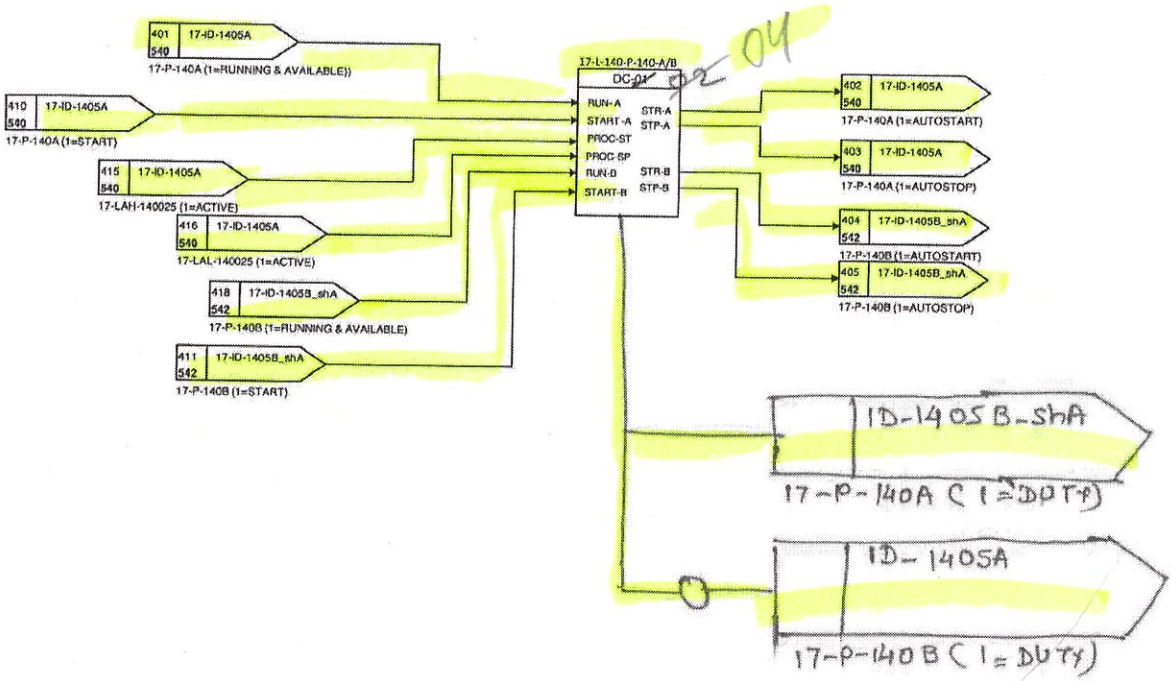

OUTPUT

TAG	Logic Status
	0= 1=
	0= 1=
	0= 1=
	0= 1=
	0= 1=
	0= 1=
	0= 1=
	0= 1=
	0= 1=
	0= 1=
	0= 1=
	0= 1=
	0= 1=
	0= 1=

21.02.25 PKC 21.02.25 21.02.25 17.02.2022

Eurochem

EUROCHEM

Tecnimont

17-ID-1406A K2 CLEAN RAIN WATER LIFT STN2 17L143P143A

DCS LOGIC DIAGRAMS-AMMONIA UTILITIES

AMMONIA AND UREA PRODUCTION, KINGISEPP

3000 MTPD AMMONIA

TECNIMONT IDENTIFICATION CODE	
Document Number	Revision
4124-JK-DD-217000010	03
Sheet 550	next 552
Sh.Rev. 02	
CUSTOMER IDENTIFICATION CODE	
-	03

INPUT

Logic Status	TAG
0= 1=	
0= NOT RUNNING 1= RUNNING	17-XS -M143LP-A MCC DI -
0= 1=	
0= NOT AVLB 1= AVAILABLE	17-XSA -M143LP-A MCC DI -
0= 1=	
0= 1=	
0= LOCAL 1= REMOTE	17-XSR -M143LP-A MCC DI -
0= 1=	
0= TRIP 1= NORMAL	17-TSH -M143LPA Field DI -
0= TRIP 1= NORMAL	17-XSL -M143LPA Field DI -
0= 1=	17-LT -140028 Field AI -
0= 1=	
0= 1=	

DCS SOFTWARE

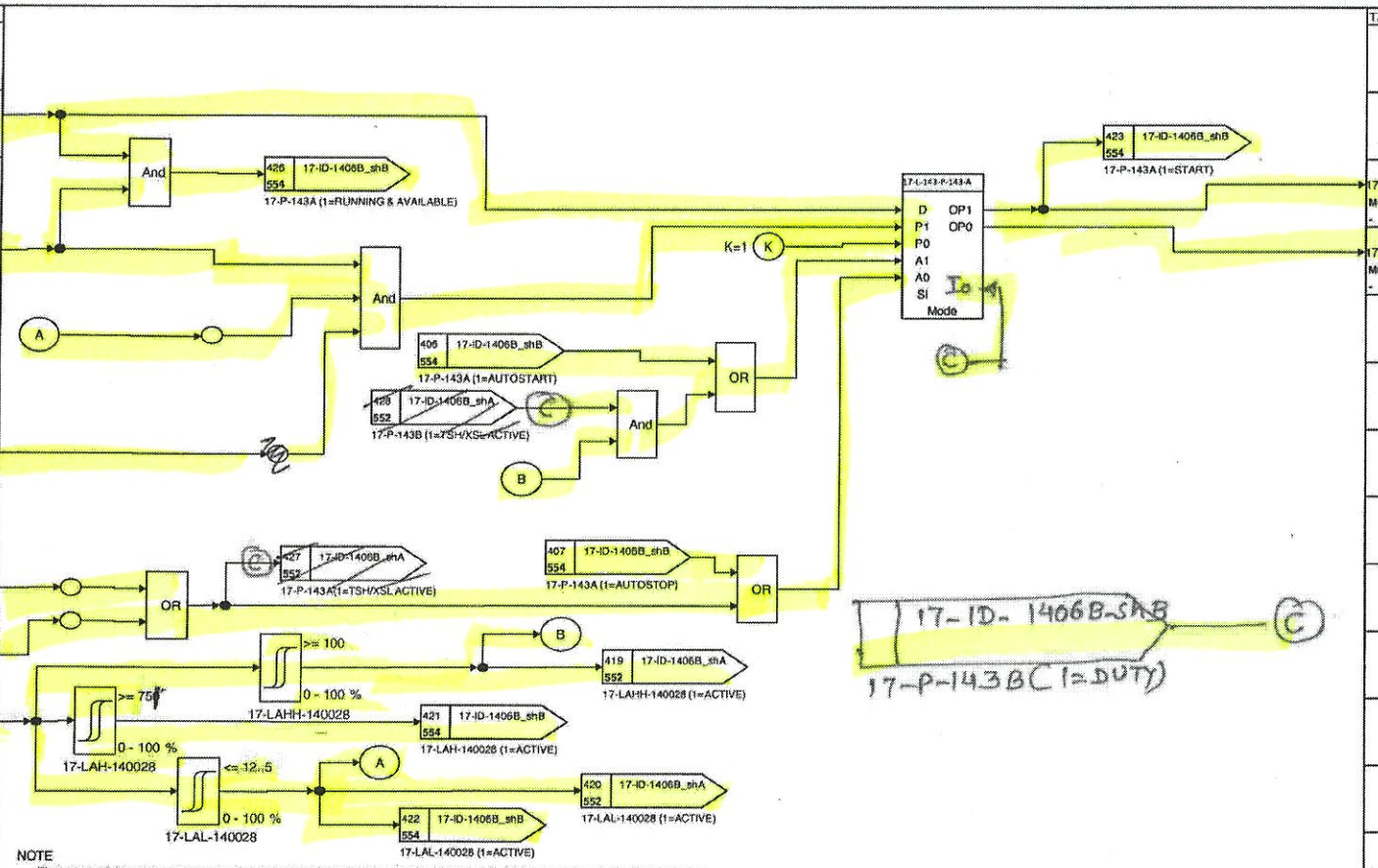

NOTE
First start of the pump is managed by operator through manual start from DCS. Main pump is selected by operator

OUTPUT

TAG	Logic Status
	0= 1=
	0= 1=
17-XYST -M143LP-A MCC DO -	0= NO ACTION 1= START
17-XYSP -M143LP-A MCC DO -	0= STOP 1= NO ACTION
	0= 1=
	0= 1=
	0= 1=
	0= 1=
	0= 1=
	0= 1=
	0= 1=
	0= 1=
	0= 1=
	0= 1=

20.02.25 TKC 20.02.25 21.02.25 11/2/22 17.06.2022

EUROCHEM

Tecnimont

17-ID-1406B_shA K2 CLEAN RAIN WATER LIFT STN2 17L143P143B

DCS LOGIC DIAGRAMS-AMMONIA UTILITIES

AMMONIA AND UREA PRODUCTION, KINGISEPP

3000 MTPD AMMONIA

TECNIMONT IDENTIFICATION CODE	
Document Number	Revision
4124-JK-DD-217000010	03
Sheet 552 next 554	
Sh.Rev. 01	
CUSTOMER IDENTIFICATION CODE	
-	03

INPUT

Logic Status	TAG
0= 1=	
0= NOT RUNNING 1= RUNNING	17-XS -M143LP-B MCC DI -
0= 1=	
0= NOT AVLB 1= AVAILABLE	17-XSA -M143LP-B MCC DI -
0= 1=	
0= 1=	
0= LOCAL 1= REMOTE	17-XSR -M143LP-B MCC DI -
0= 1=	
0= TRIP 1= NORMAL	17-TSH -M143LPB Field DI -
0= TRIP 1= NORMAL	17-XSL -M143LPB Field DI -
0= 1=	
0= 1=	
0= 1=	

DCS SOFTWARE

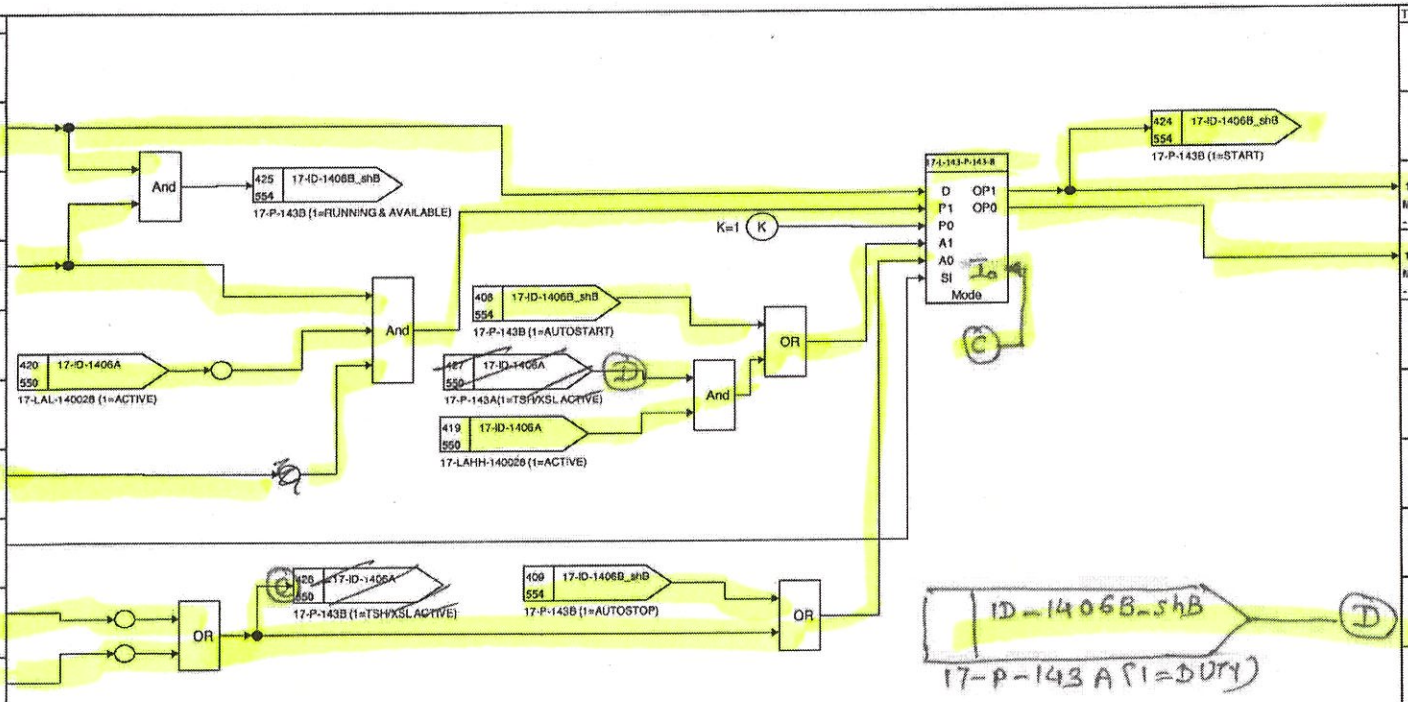

NOTE:
First start of the pump is managed by operator through manual start from DCS. Main pump is selected by operator

OUTPUT

TAG	Logic Status
	0= 1=
	0= 1=
17-XYST -M143LP-B MCC DO -	0= NO ACTION 1= START
17-XYSP -M143LP-B MCC DO -	0= STOP 1= NO ACTION
	0= 1=
	0= 1=
	0= 1=
	0= 1=
	0= 1=
	0= 1=
	0= 1=
	0= 1=
	0= 1=

20.02.25 PKC 20.02.25 21.02.25 9/2/22 17.02.2022 Eurochem

EUROCHEM	17-ID-1406B_shB K2 CLEAN RAIN WATER LIFT STN2 17L143P143B DCS LOGIC DIAGRAMS-AMMONIA UTILITIES AMMONIA AND UREA PRODUCTION, KINGISEPP	TECNIMONT IDENTIFICATION CODE Document Number 4124-JK-DD-217000010 Revision 03 Sheel 554 next 560 Sh.Rev. 01
Tecnimont	3000 MTPD AMMONIA	CUSTOMER IDENTIFICATION CODE - 03

INPUT | DCS SOFTWARE | OUTPUT

Logic Status	TAG
0= 1=	
0= 1=	
0= 1=	
0= 1=	
0= 1=	
0= 1=	
0= 1=	
0= 1=	
0= 1=	
0= 1=	
0= 1=	
0= 1=	
0= 1=	

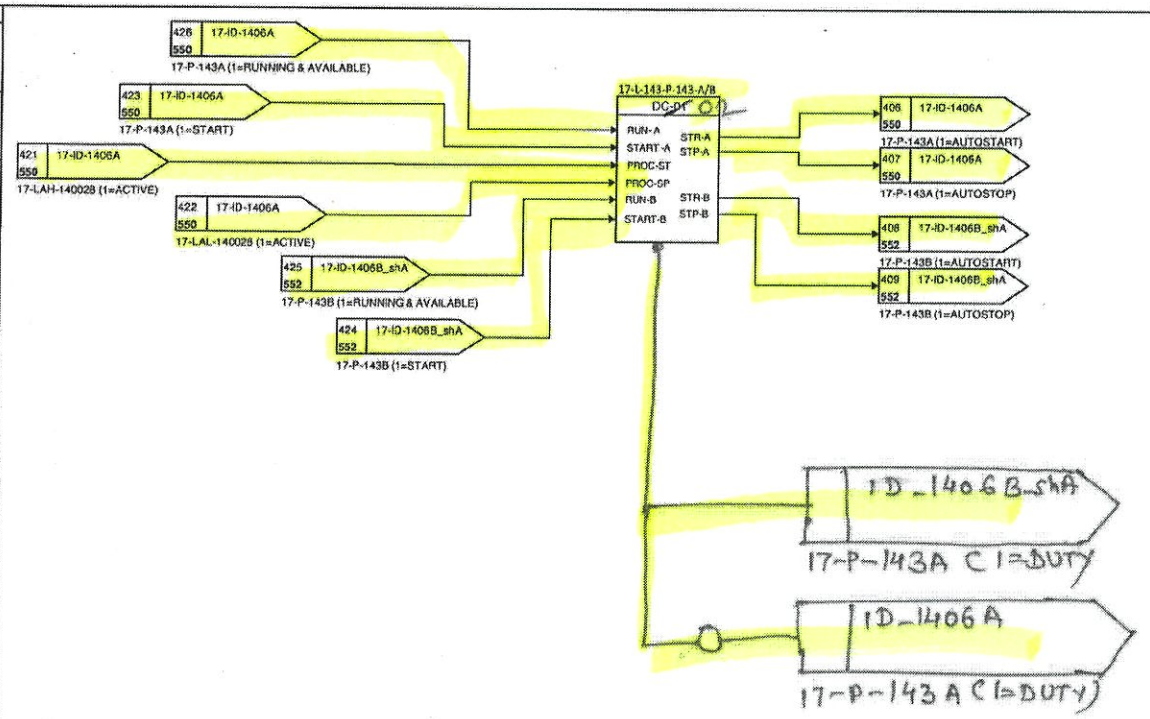

TAG	Logic Status
	0= 1=
	0= 1=
	0= 1=
	0= 1=
	0= 1=
	0= 1=
	0= 1=
	0= 1=
	0= 1=
	0= 1=
	0= 1=
	0= 1=
	0= 1=

20.02.25

PKC 20.02.25

21.02.25

11/2/22

17.02.2022

Eurochem

EUROCHEM

Tecnimont

17-ID-1407A K13 PROC CONTAMINATED WTR LIFT STN 17L146P146A

DCS LOGIC DIAGRAMS-AMMONIA UTILITIES

AMMONIA AND UREA PRODUCTION, KINGISEPP

3000 MTPD AMMONIA

TECNIMONT IDENTIFICATION CODE	
Document Number	Revision
4124-JK-DD-217000010	03
Sheet 560	next 562
Sh.Rev. 02	
CUSTOMER IDENTIFICATION CODE	
-	03

INPUT

Logic Status	TAG
0= 1=	
0= NOT RUNNING 1= RUNNING	17-XS -M146LP-A MCC DI
0= 1=	
0= NOT AVLB 1= AVAILABLE	17-XSA -M146LP-A MCC DI
0= 1=	
0= 1=	
0= LOCAL 1= REMOTE	17-XSR -M146LP-A MCC DI
0= 1=	
0= TRIP 1= NORMAL	17-TSH -M146LPA Field DI
0= TRIP 1= NORMAL	XSL 17-XSL -M146LPA Field DI
0= 1=	17-LT -140031 Field AI
0= 1=	
0= 1=	

DCS SOFTWARE

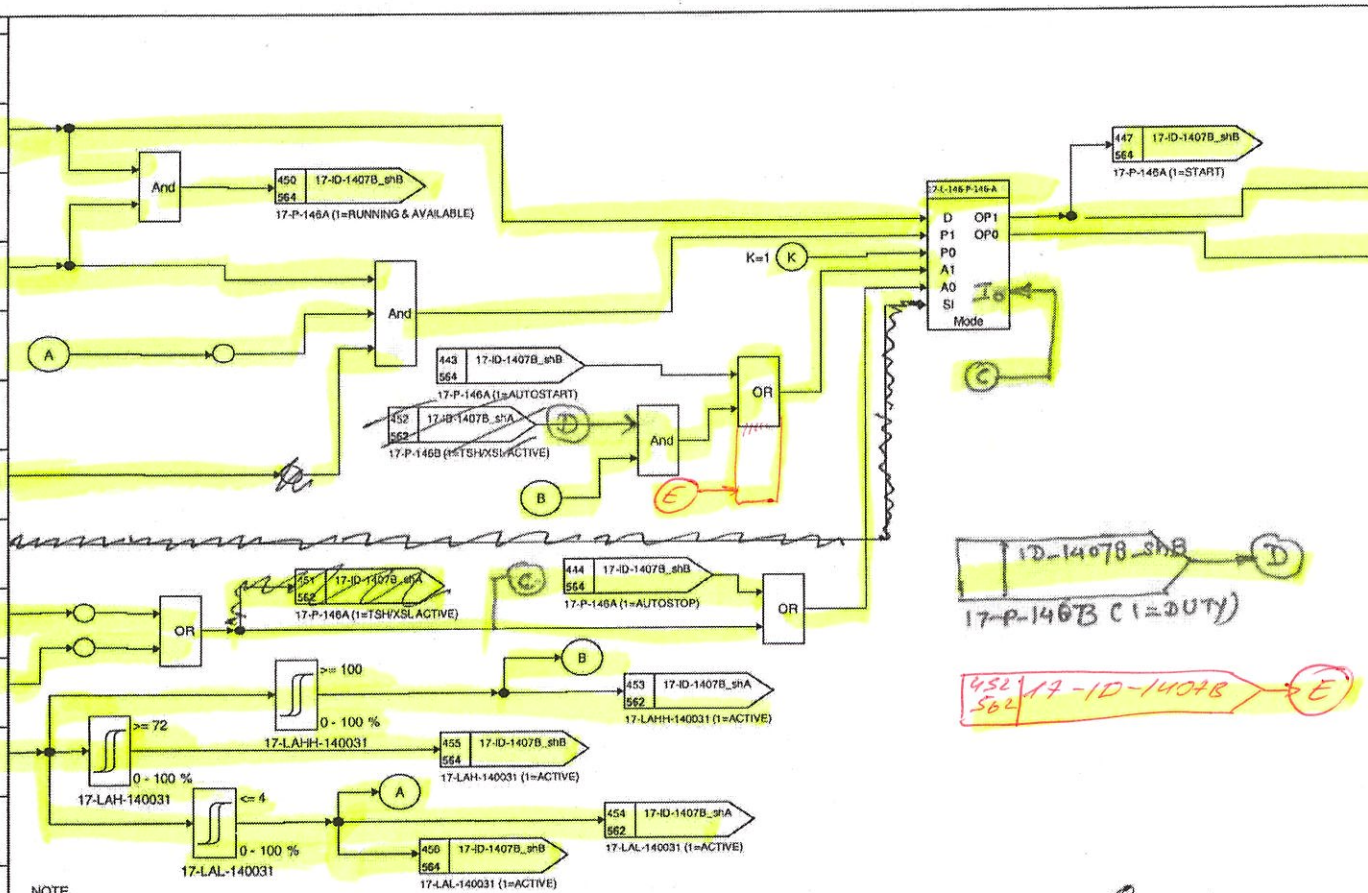

NOTE
First start of the pump is managed by operator through manual start from DCS. Main pump is selected by operator

OUTPUT

TAG	Logic Status
	0= 1=
	0= 1=
17-XYST -M146LP-A MCC DO	0= NO ACTION 1= START
17-XYSP -M146LP-A MCC DO	0= STOP 1= NO ACTION
	0= 1=
	0= 1=
	0= 1=
	0= 1=
	0= 1=
	0= 1=
	0= 1=
	0= 1=

20.02.25

FUC 20.02.25

20.02.25

8/2/22

8/2/22

8.02.2022

Eurochem

EUROCHEM

Tecnimont

17-ID-1407B_shA K13 PROC CONTAMINATED WTR LIFT STN 17L146P146B

DCS LOGIC DIAGRAMS-AMMONIA UTILITIES

AMMONIA AND UREA PRODUCTION, KINGISEPP

3000 MTPD AMMONIA

TECNIMONT IDENTIFICATION CODE	
Document Number	Revision
4124-JK-DD-217000010	03
Sheet 562 next 564	
Sh.Rev. 01	
CUSTOMER IDENTIFICATION CODE	
-	03

DCS SOFTWARE

INPUT

Logic Status	TAG
0= 1=	
0= NOT RUNNING 1= RUNNING	17-XS -M146LP-B MCC DI
0= 1=	
0= NOT AVLB 1= AVAILABLE	17-XSA -M146LP-B MCC DI
0= 1=	
0= 1=	
0= LOCAL 1= REMOTE	17-XSR -M146LP-B MCC DI
0= 1=	
0= TRIP 1= NORMAL	17-TSH -M146LPB Field DI
0= TRIP 1= NORMAL	17-XSL -M146LPB Field DI
0= 1=	
0= 1=	
0= 1=	

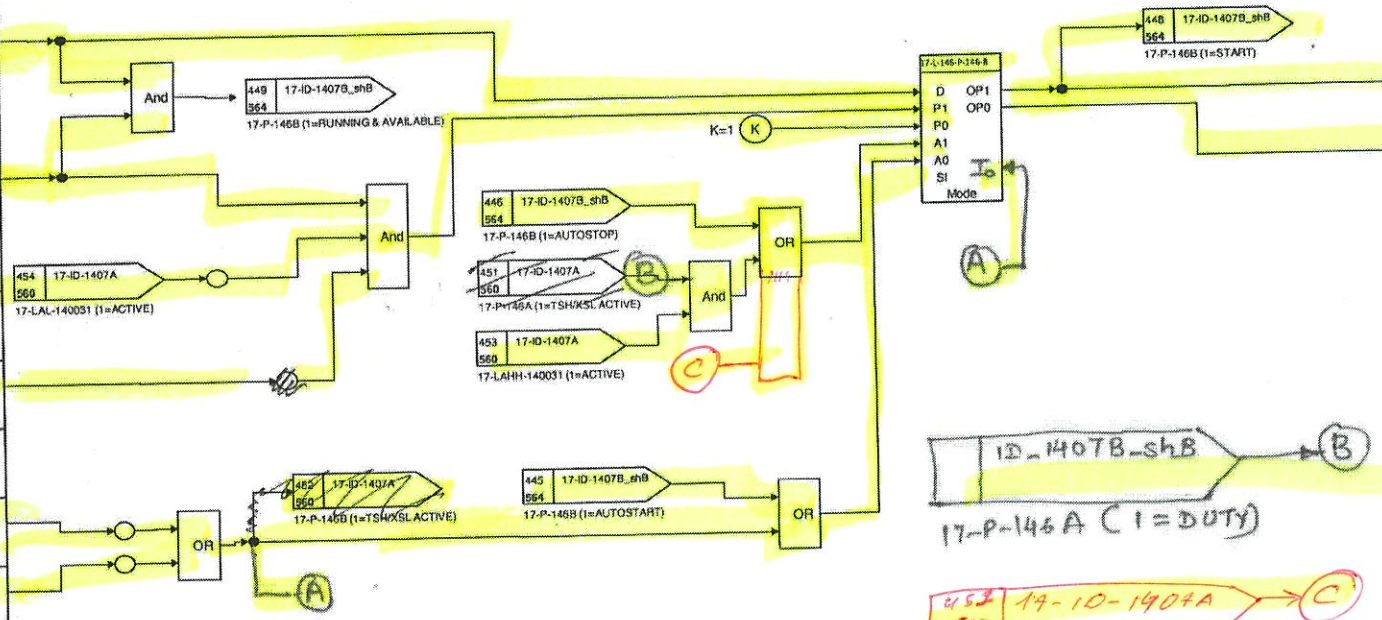

OUTPUT

TAG	Logic Status
	0= 1=
	0= 1=
17-XYST -M146LP-B MCC DO	0= NO ACTION 1= START
17-XYSP -M146LP-B MCC DO	0= STOP 1= NO ACTION
	0= 1=
	0= 1=
	0= 1=
	0= 1=
	0= 1=
	0= 1=
	0= 1=
	0= 1=
	0= 1=

NOTE:
First start of the pump is managed by operator through manual start from DCS. Main pump is selected by operator

20.02.25 PKC 20.02.25 20.02.25 8/2/22 8/2/22 17.02.2022 Eurochem

EUROCHEM

Tecnimont

17-ID-1407B_shB K13 PROC CONTAMINATED WTR LIFT STN 17L146P146B

DCS LOGIC DIAGRAMS-AMMONIA UTILITIES

AMMONIA AND UREA PRODUCTION, KINGISEPP

3000 MTPD AMMONIA

TECNIMONT IDENTIFICATION CODE			
Document Number		Revision	
4124-JK-DD-217000010		03	
Sheet	564	next	570
Sh.Rev.	01		
CUSTOMER IDENTIFICATION CODE			
-		03	

DCS SOFTWARE

INPUT

Logic Status	TAG
0= 1=	
0= 1=	
0= 1=	
0= 1=	
0= 1=	
0= 1=	
0= 1=	
0= 1=	
0= 1=	
0= 1=	
0= 1=	
0= 1=	
0= 1=	
0= 1=	

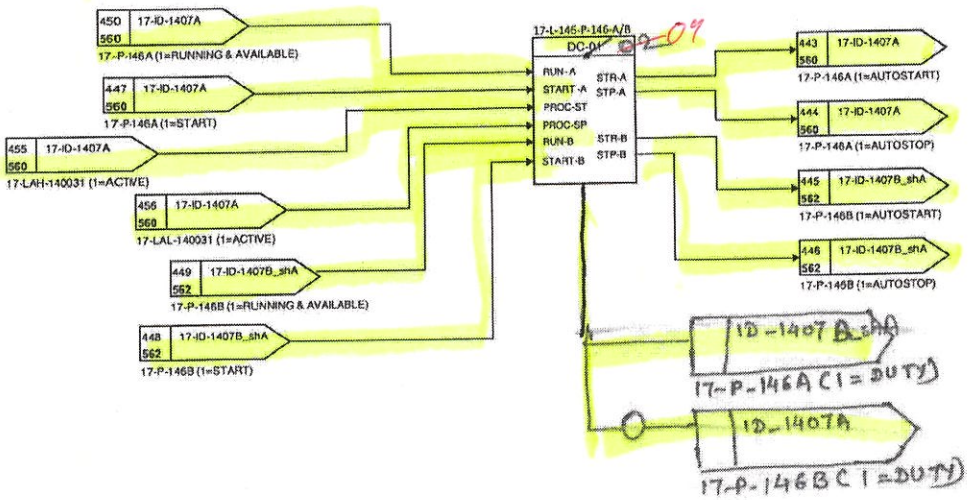

OUTPUT

TAG	Logic Status
	0= 1=
	0= 1=
	0= 1=
	0= 1=
	0= 1=
	0= 1=
	0= 1=
	0= 1=
	0= 1=
	0= 1=
	0= 1=
	0= 1=
	0= 1=
	0= 1=

20.02.25 TKC 20-02-25 20.02.25 8/2/22 8/2/22 17.02.2022 Eurochem

EUROCHEM

Tecnimont

17-ID-1408A K17 OILY CONTAMINATED WTR LIFT STN 17L147P147A

DCS LOGIC DIAGRAMS-AMMONIA UTILITIES

AMMONIA AND UREA PRODUCTION, KINGISEPP

3000 MTPD AMMONIA

TECNIMONT IDENTIFICATION CODE	
Document Number	Revision
4124-JK-DD-217000010	03
Sheet 570 next 572	
Sh.Rev. 02	
CUSTOMER IDENTIFICATION CODE	
-	03

INPUT

Logic Status	TAG
0= 1=	
0= NOT RUNNING 1= RUNNING	17-XS -M147LP-A MCC DI -
0= 1=	
0= NOT AVLB 1= AVAILABLE	17-XSA -M147LP-A MCC DI -
0= 1=	
0= 1=	
0= LOCAL 1= REMOTE	17-XSR -M147LP-A MCC DI -
0= 1=	
0= TRIP 1= NORMAL	17-TSH -M147LPA Field DI -
0= TRIP 1= NORMAL	17-XSL -M147LPA Field DI -
0= 1=	17-LT -140034 Field AI -
0= 1=	
0= 1=	

DCS SOFTWARE

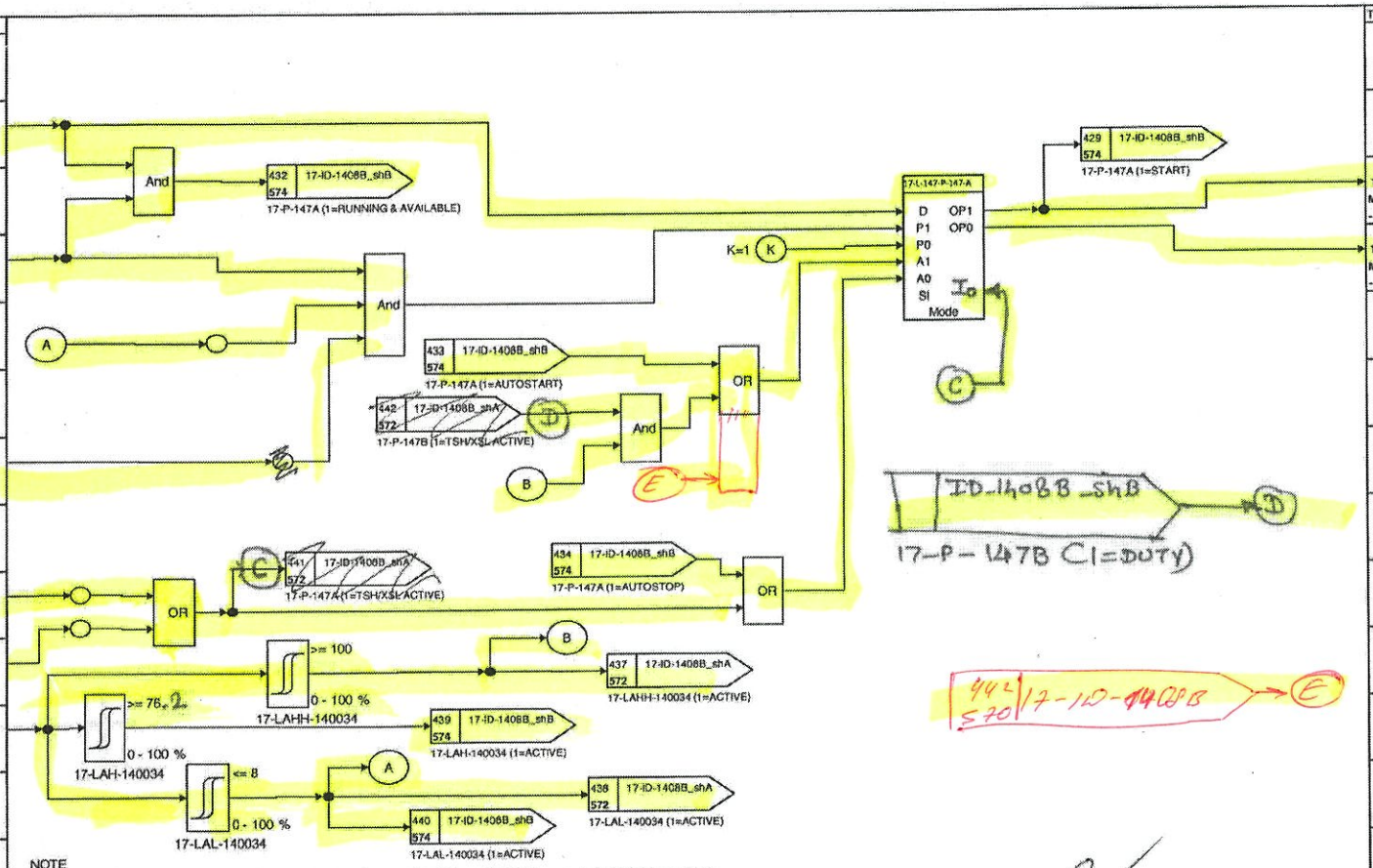

NOTE
First start of the pump is managed by operator through manual start from DCS. Main pump is selected by operator

OUTPUT

TAG	Logic Status
	0= 1=
	0= 1=
17-XYST -M147LP-A MCC DO -	0= NO ACTION 1= START
17-XYSP -M147LP-A MCC DO -	0= STOP 1= NO ACTION
	0= 1=
	0= 1=
	0= 1=
	0= 1=
	0= 1=
	0= 1=
	0= 1=
	0= 1=
	0= 1=

14.02.25 PKC 14.02.25 14.02.25 8/2/22 17.02.2022 Eurochem

EUROCHEM

Tecnimont

17-ID-1408B_shA K17 OILY CONTAMINATED WTR LIFT STN 17L147P147B

DCS LOGIC DIAGRAMS-AMMONIA UTILITIES

AMMONIA AND UREA PRODUCTION, KINGISEPP

3000 MTPD AMMONIA

TECNIMONT IDENTIFICATION CODE	
Document Number	Revision
4124-JK-DD-217000010	03
Sheet 572 next 574	
Sh.Rev. 01	
CUSTOMER IDENTIFICATION CODE	
-	03

DCS SOFTWARE

INPUT

Logic Status	TAG
0= 1=	
0= NOT RUNNING 1= RUNNING	17-XS -M147LP-B MCC DI -
0= 1=	
0= NOT AVLB 1= AVAILABLE	17-XSA -M147LP-B MCC DI -
0= 1=	
0= 1=	
0= LOCAL 1= REMOTE	17-XSR -M147LP-B MCC DI -
0= 1=	
0= TRIP 1= NORMAL	17-TSH -M147LPB Field DI -
0= TRIP 1= NORMAL	17-XSL -M147LPB Field DI -
0= 1=	
0= 1=	
0= 1=	

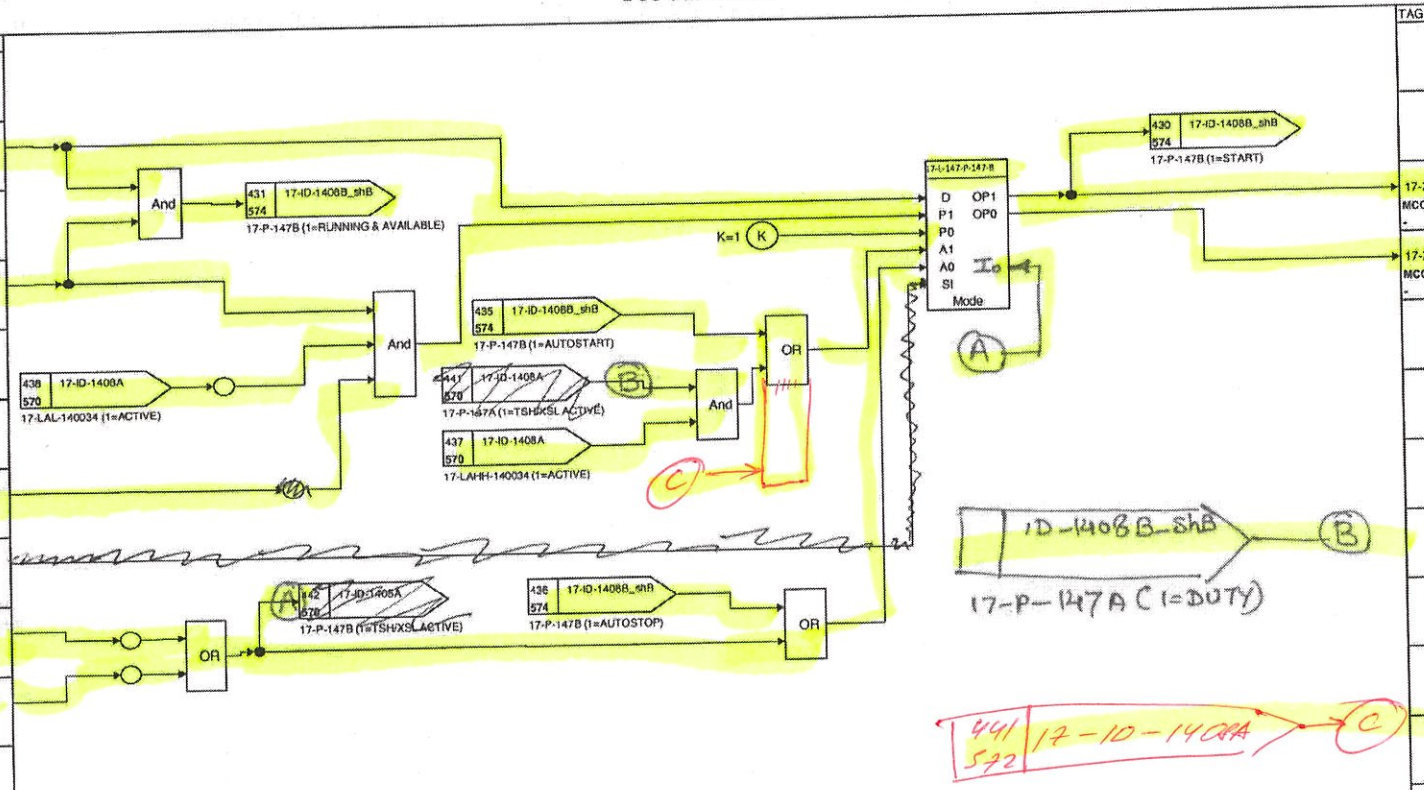

OUTPUT

TAG	Logic Status
	0= 1=
	0= 1=
17-XYST -M147LP-B MCC DO -	0= NO ACTION 1= START
17-XYSP -M147LP-B MCC DO -	0= STOP 1= NO ACTION
	0= 1=
	0= 1=
	0= 1=
	0= 1=
	0= 1=
	0= 1=
	0= 1=
	0= 1=
	0= 1=

NOTE:
First start of the pump is managed by operator through manual start from DCS. Main pump is selected by operator

14.02.23 РКС 14.02.25 14.02.25 8/2/22 17.02.2022 Eurochem

EUROCHEM

Tecnimont

17-ID-1408B_shB K17 OILY CONTAMINATED WTR LIFT STN 17L147P147B

DCS LOGIC DIAGRAMS-AMMONIA UTILITIES

AMMONIA AND UREA PRODUCTION, KINGISEPP

3000 MTPD AMMONIA

TECNIMONT IDENTIFICATION CODE	
Document Number	Revision
4124-JK-DD-217000010	03
Sheet 574 next 680	
Sh.Rev. 01	
CUSTOMER IDENTIFICATION CODE	
-	03

DCS SOFTWARE

INPUT

Logic Status	TAG
0= 1=	
0= 1=	
0= 1=	
0= 1=	
0= 1=	
0= 1=	
0= 1=	
0= 1=	
0= 1=	
0= 1=	
0= 1=	
0= 1=	
0= 1=	

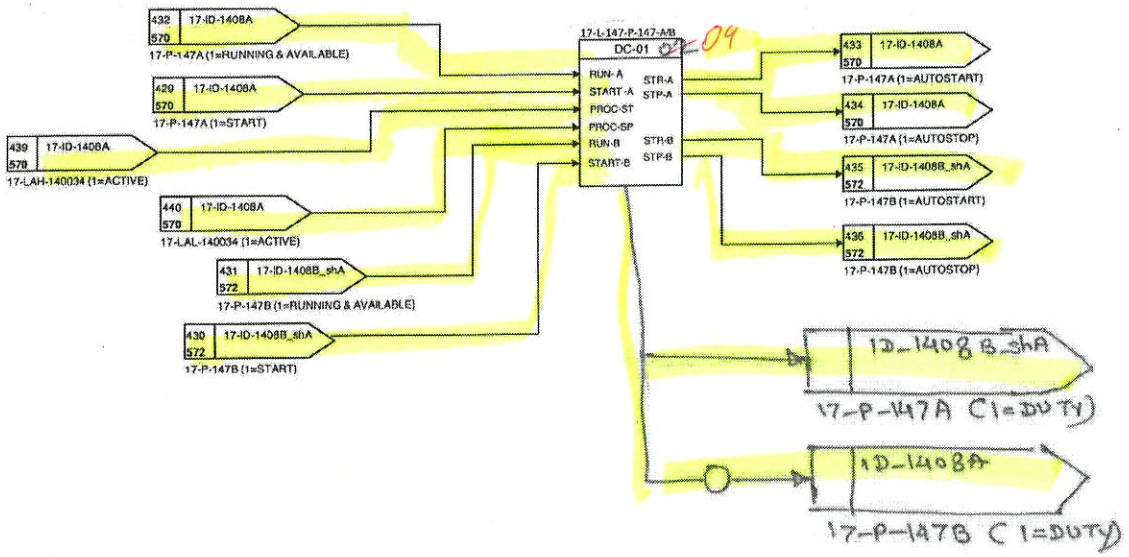

OUTPUT

TAG	Logic Status
	0= 1=
	0= 1=
	0= 1=
	0= 1=
	0= 1=
	0= 1=
	0= 1=
	0= 1=
	0= 1=
	0= 1=
	0= 1=
	0= 1=
	0= 1=

14.02.25

PLC 14.02.25

14.02.25

8/2/22

17.02.2022

Eurochem

EUROCHEM

Tecnimont

Appendix-1_shA ON-OFF VALVES

DCS LOGIC DIAGRAMS-AMMONIA UTILITIES

AMMONIA AND UREA PRODUCTION, KINGISEPP

3000 MTPD AMMONIA

TECNIMONT IDENTIFICATION CODE	
Document Number	Revision
4124-JK-DD-217000010	03
Sheet 680 next 681	
Sh.Rev. 02	
CUSTOMER IDENTIFICATION CODE	
.	03

INPUT

Logic Status	TAG
0= 1=	
0= 1=	
0= CLOSE 1= OPEN	17-XY -03011-OR DCS SDI ESD
0= 1=	
0= 1=	
0= OPEN 1= CLOSE	17-XY -10062 -OR DCS SDI ESD
0= 1=	
0= 1=	
0= OPEN 1= CLOSE	17-XY -07044-OR DCS SDI ESD
0= 1=	
0= 1=	
0= OPEN 1= CLOSE	~~17-XY -11200-OR DCS SDI ESD~~
0= 1=	

DCS SOFTWARE

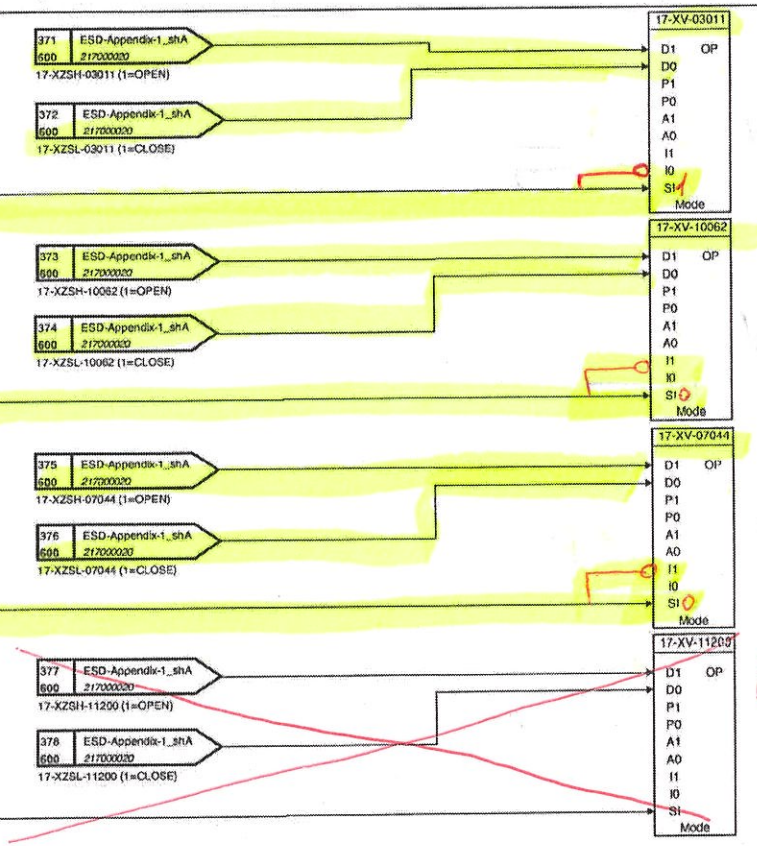

удален в связи с искл. турбины 17STP111A

OUTPUT

TAG	Logic Status
	0= 1=
	0= 1=
	0= 1=
	0= 1=
	0= 1=
	0= 1=
	0= 1=
	0= 1=
	0= 1=
	0= 1=
	0= 1=
	0= 1=
	0= 1=

21.02.25 ГКС 21.02.25

EUROCHEM

Tecnimont

Appendix-1_shB ON-OFF VALVES

DCS LOGIC DIAGRAMS-AMMONIA UTILITIES

AMMONIA AND UREA PRODUCTION, KINGISEPP

3000 MTPD AMMONIA

TECNIMONT IDENTIFICATION CODE	
Document Number	Revision
4124-JK-DD-217000010	03
Sheet 681 next 700	
Sh.Rev. 02	
CUSTOMER IDENTIFICATION CODE	
-	03

INPUT

Logic Status	TAG
0= 1=	
0= 1=	
0= OPEN 1= CLOSE	17-XY -11300-OR DCS SDI ESD
0= 1=	
0= 1=	
0= OPEN 1= CLOSE	11-XY -00010-OR DCS SDI ESD
0= 1=	
0= 1=	
0= CLOSE 1= OPEN	17-XY -03012-OR DCS SDI ESD
0= 1=	
0= 1=	
0= CLOSE 1= OPEN	17-XY -11311-OR DCS SDI ESD
0= 1=	

DCS SOFTWARE

379 602 ESD-Appendix-1_shB 217000020 → 17-XV-11300 D1 (OP)
17-XZSH-11300 (1=OPEN)

380 602 ESD-Appendix-1_shB 217000020 → 17-XV-11300 D0
17-XZSL-11300 (1=CLOSE)

17-XV-11300: D1 OP, D0, P1, P0, A1, A0, I1, I0, SI 0, Mode

385 602 ESD-Appendix-1_shB 217000020 → 11-XV-00010 D1 (OP)
11-XZSH-00010 (1=OPEN)

386 602 ESD-Appendix-1_shB 217000020 → 11-XV-00010 D0
11-XZSL-00010 (1=CLOSE)

11-XV-00010: D1 OP, D0, P1, P0, A1, A0, I1, I0, SI 0, Mode

383 602 ESD-Appendix-1_shB 217000020 → 17-XV-03012 D1 (OP)
17-XZSH-03012 (1=OPEN)

384 602 ESD-Appendix-1_shB 217000020 → 17-XV-03012 D0
17-XZSL-03012 (1=CLOSE)

17-XV-03012: D1 OP, D0, P1, P0, A1, A0, I1, I0, SI 1, Mode

381 602 ESD-Appendix-1_shB 217000020 → 17-XV-11311 D1 (OP)
17-XZSH-11311 (1=OPEN)

382 602 ESD-Appendix-1_shB 217000020 → 17-XV-11311 D0
17-XZSL-11311 (1=CLOSE)

17-XV-11311: D1 OP, D0, P1, P0, A1, A0, I1, I0, SI 0, Mode

Управление от 17-L-111

OUTPUT

TAG	Logic Status
	0= 1=
	0= 1=
	0= 1=
	0= 1=
	0= 1=
	0= 1=
	0= 1=
	0= 1=
	0= 1=
	0= 1=
	0= 1=
	0= 1=
	0= 1=

21.02.25 ГКС 21.02.25

EUROCHEM

Tecnimont

Appendix-2_shA MOTORS

DCS LOGIC DIAGRAMS-AMMONIA UTILITIES

AMMONIA AND UREA PRODUCTION, KINGISEPP

3000 MTPD AMMONIA

TECNIMONT IDENTIFICATION CODE			
Document Number			Revision
4124-JK-DD-217000010			03
Sheet	700	next	702
Sh.Rev.	03		
CUSTOMER IDENTIFICATION CODE			
-			03

03

INPUT

Logic Status	TAG
0= 1=	
0= NOT RUNNING 1= RUNNING	17-XS -M101K-A MCC DI
0= LOCAL 1= REMOTE	17-XSR -M101K-A MCC DI
0= NOT AVLB 1= AVAILABLE	17-XSA -M101K-A MCC DI
0= NORMAL 1= TRIP	17-XST-M101K-AOR DCS SOI ESD
0= 1=	
0= 1=	
0= 1=	
0= 1=	
0= 1=	
0= 1=	
0= 1=	
0= 1=	

DCS SOFTWARE

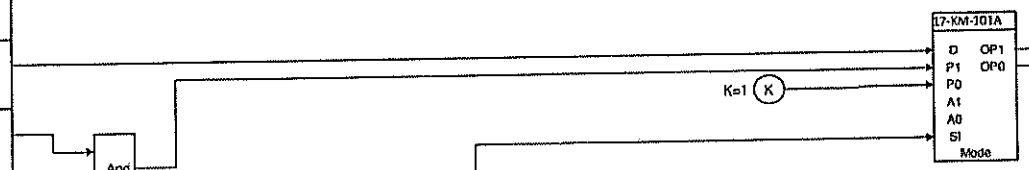

OUTPUT

TAG	Logic Status
	0= 1=
17-KYST -M101K-A MCC DO	0= NO ACTION 1= START
17-KYSP -M101K-A MCC DO	0= STOP 1= NO ACTION
	0= 1=
	0= 1=
	0= 1=
	0= 1=
	0= 1=
	0= 1=
	0= 1=
	0= 1=
	0= 1=
	0= 1=
	0= 1=

24.12.22

24.12.22

EUROCHEM

Tecnimont

Appendix-3 Appendix-3

DCS LOGIC DIAGRAMS-AMMONIA UTILITIES

AMMONIA AND UREA PRODUCTION, KINGISEPP

3000 MTPD AMMONIA

TECNIMONT IDENTIFICATION CODE	
Document Number	Revision
4124-JK-DD-217000010	03
Sheet 702 next 704	
Sh.Rev. 03	
CUSTOMER IDENTIFICATION CODE	
-	03

ТСМ 19.04.22

217000020 Sheet 320

DCS SOFTWARE

INPUT

Logic Status	TAG
0= 1=	
0= NO ACTION 1= RESET	17-HS -11281-YT DCS
0= 1=	
0= 1=	
0= 1=	17-FT -07021 Field AI-R
0= 1=	
0= 1=	
0= 1=	
0= 1=	
0= 1=	
0= 1=	
0= 1=	
0= 1=	

OUTPUT

TAG	Logic Status
	0= 1=
17-HS 11281 RR-AM OST DO	0= NO ACTION 1= RESET
17FY07021 Field AO-R	1=
	0= 1=
	0= 1=
	0= 1=
	0= 1=
17-HS -100245-AY RR-AM PLC DO	0= NO ACTION 1= POS ACTIVE
17-HS -100245-BY RR-AM PLC DO	0= NO ACTION 1= POS ACTIVE
	0= 1=
	0= 1=

~~17-HS-01102RA 1=RESET~~ ~~PO 5s~~

03 ~~OST RESET ON HMI~~ PO 5 s

~~OST RESET~~

391 320 17-H-1102A 217000020 OST RESET ACTIVE (1=RESET)

Удалено в связи с исключ. турбины 17ST P111A

17-FIC-07021

PV Out
Sp
Ext_En
MAN
MAN OUT
AUT
CAS
Kp
Ti
Td
Reverse(-)
Track en
SP Track en

AFO

391 320 17-ID-0706 NOTE

17-LAHH-07075 (1=ACTIVE)

17-LAH-0 TOT

(1 = Active)

17-L-101A TRAIN A POS ACTIVE (1 = ACTIVE)

17-L-101B TRAIN B POS ACTIVE (1 = ACTIVE)

ON APPENDIX-8A

03

NOTE

1 . WHEN THE INTERLOCK IS ACTIVE SET CONTROLLER 17-FIC-07021 IN MAN MODE WITH O/P FORCED TO 0% TO KEEP IT CLOSED

21.02.25 PLC 21.02.25

8/5/22

EUROCHEM

Tecnimont

Appendix-4 Appendix-4 (WPC)

DCS LOGIC DIAGRAMS-AMMONIA UTILITIES

AMMONIA AND UREA PRODUCTION, KINGISEPP

3000 MTPD AMMONIA

TECNIMONT IDENTIFICATION CODE	
Document Number	Revision
4124-JK-DD-217000010	03
Sheet 704 next	706
Sh.Rev. 02	
CUSTOMER IDENTIFICATION CODE	
-	03

DCS SOFTWARE

INPUT

Logic Status	TAG
0= 1=	
0= 1=	
0= 1=	17-AT -020206 Field AI -
0= 1=	
0= 1= NOT ENABLE 1= ENABLE	17-HS -020206 DCS -
0= 1=	
0= 1=	
0= 1=	
0= 1=	
0= 1=	
0= 1=	
0= 1=	
0= 1=	
0= 1=	

~~TO BE DEVELOPED IN WTU DCS NODE~~

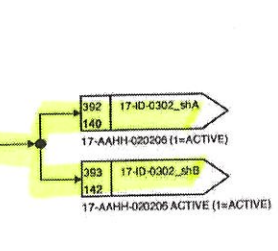

OUTPUT

TAG	Logic Status
	0= 1=
	0= 1=
	0= 1=
	0= 1=
	0= 1=
	0= 1=
	0= 1=
	0= 1=
	0= 1=
	0= 1=
	0= 1=
	0= 1=
	0= 1=
	0= 1=

21.02.22 ГКС 21.02.25

EUROCHEM

Tecnimont

Appendix-5_shA Appendix-5 DG SEQUENCE PARAM

DCS LOGIC DIAGRAMS-AMMONIA UTILITIES

AMMONIA AND UREA PRODUCTION, KINGISEPP

3000 MTPD AMMONIA

TECNIMONT IDENTIFICATION CODE	
Document Number	Revision
4124-JK-DD-217000010	03
Sheet 706 next 708	
Sh.Rev. 02	
CUSTOMER IDENTIFICATION CODE	
-	03

INPUT

Logic Status	TAG
0= 1=	
0= NOT ACTIVE 1= ACTIVE	17-XS-1010ST1 DCS SDI ESD
0= 1=	
0= 1=	
0= 1=	
0= 1=	
0= 1=	
0= NOT ACTIVE 1= ACTIVE	17-XS-1010ST2 DCS SDI ESD
0= 1=	
0= 1=	
0= 1=	
0= 1=	
0= 1=	
0= 1=	

DCS SOFTWARE

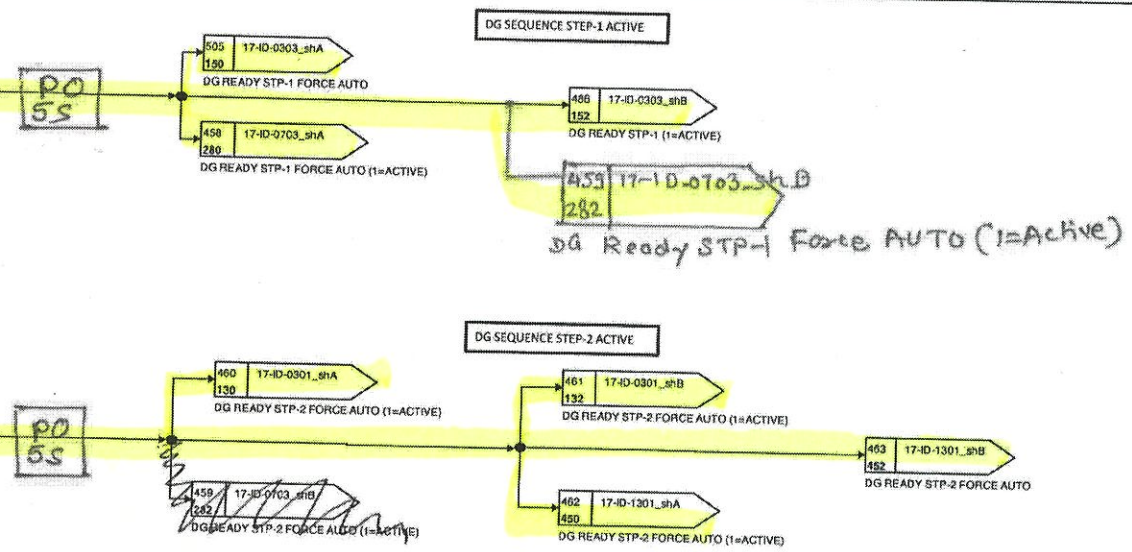

OUTPUT

TAG	Logic Status
	0= 1=
	0= 1=
	0= 1=
	0= 1=
	0= 1=
	0= 1=
	0= 1=
	0= 1=
	0= 1=
	0= 1=
	0= 1=
	0= 1=
	0= 1=
	0= 1=

21.02.25

RKC 21.02.25

EUROCHEM

Tecnimont

Appendix-5_shB Appendix-5 DG SEQUENCE PARAM

DCS LOGIC DIAGRAMS-AMMONIA UTILITIES

AMMONIA AND UREA PRODUCTION, KINGISEPP

3000 MTPD AMMONIA

TECNIMONT IDENTIFICATION CODE	
Document Number	Revision
4124-JK-DD-217000010	03
Sheet 708 next 710	
Sh.Rev. 02	
CUSTOMER IDENTIFICATION CODE	
-	03

INPUT

Logic Status	TAG
0= 1=	
0= 1=	
0= NOT ACTIVE 1= ACTIVE	17-XS-1010ST3 DCS SDI ESD
0= 1=	
0= 1=	
0= 1=	
0= 1=	
0= 1=	
0= 1=	
0= 1=	
0= NOT ACTIVE 1= ACTIVE	17-XS-1010ST5 DCS SDI ESD
0= 1=	
0= 1=	
0= 1=	

DCS SOFTWARE

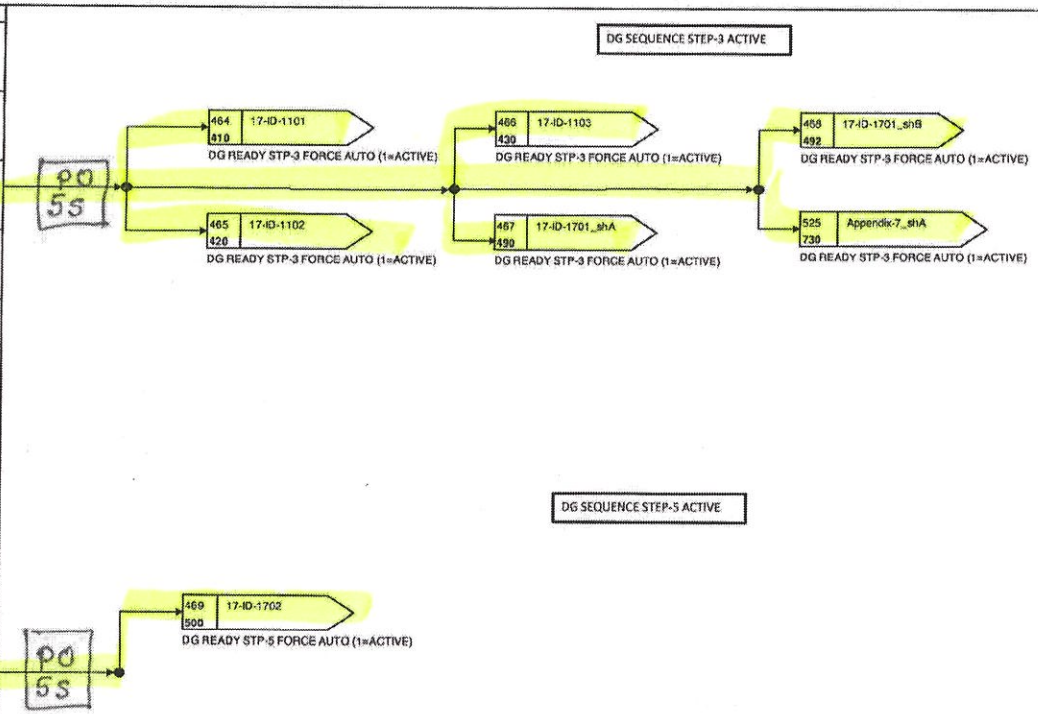

OUTPUT

TAG	Logic Status
	0= 1=
	0= 1=
	0= 1=
	0= 1=
	0= 1=
	0= 1=
	0= 1=
	0= 1=
	0= 1=
	0= 1=
	0= 1=
	0= 1=
	0= 1=
	0= 1=

21.02.25

ГКС 21.02.25

25/2/22

EUROCHEM

Tecnimont

Appendix-5_shC Appendix-5 DG SEQUENCE PARAM

DCS LOGIC DIAGRAMS-AMMONIA UTILITIES

AMMONIA AND UREA PRODUCTION, KINGISEPP

3000 MTPD AMMONIA

TECNIMONT IDENTIFICATION CODE			
Document Number		Revision	
4124-JK-DD-217000010		03	
Sheet	710	next	712
Sh.Rev.	02		
CUSTOMER IDENTIFICATION CODE			
-		03	

INPUT

Logic Status	TAG
0= 1=	
0= 1=	
0= NOT ACTIVE 1= ACTIVE	17-XS-1010ST7 DCS SDI ESD
0= 1=	
0= 1=	
0= 1=	
0= 1=	
0= 1=	
0= NOT ACTIVE 1= ACTIVE	17-XS-1010ST8 DCS SDI ESD
0= 1=	
0= 1=	
0= 1=	
0= 1=	

DCS SOFTWARE

DG SEQUENCE STEP-7 ACTIVE

PO SS

470 / 480 — 17-ID-1403A — DG READY STP-7 FORCE AUTO (1=ACTIVE)

471 / 482 — 17-ID-1403B_shA — DG READY STP-7 FORCE AUTO (1=ACTIVE)

DG SEQUENCE STEP-8 ACTIVE

PO SS

527 / 732 — Appendix-7_shB — DG READY STP-8 FORCE AUTO (1=ACTIVE)

OUTPUT

TAG	Logic Status
	0= 1=
	0= 1=
	0= 1=
	0= 1=
	0= 1=
	0= 1=
	0= 1=
	0= 1=
	0= 1=
	0= 1=
	0= 1=
	0= 1=

21.02.25

PCC 21.02.25

25/2/25

EUROCHEM

Tecnimont

Appendix-5_shD Appendix-5 DG SEQUENCE PARAM

DCS LOGIC DIAGRAMS-AMMONIA UTILITIES

AMMONIA AND UREA PRODUCTION, KINGISEPP

3000 MTPD AMMONIA

TECNIMONT IDENTIFICATION CODE	
Document Number	Revision
4124-JK-DD-217000010	03
Sheet 712	next 720
Sh.Rev. 02	
CUSTOMER IDENTIFICATION CODE	
-	03

INPUT | DCS SOFTWARE | OUTPUT

Logic Status	TAG
0= 1=	
0= 1=	
0= 1=	
0= 1=	
0= 1=	
0= NOT ACTIVE 1= ACTIVE	17-XS-1010STO-MAN DCS SOI ESD
0= 1=	
0= 1=	
0= 1=	
0= 1=	
0= 1=	
0= 1=	

DG SEQUENCE STEP-0 ACTIVE

504 150 17-ID-0303_shA — FORCE TO MAN MODE (1=ACTIVE)

474 288 17-ID-0703_shA — FORCE TO MAN MODE (1=ACTIVE)

476 292 17-ID-0703_shB — FORCE TO MAN MODE (1=ACTIVE)

488 450 17-ID-1301_shA — FORCE TO MAN MODE (1=ACTIVE)

489 452 17-ID-1301_shB — FORCE TO MAN MODE (1=ACTIVE)

478 410 17-ID-1101 — FORCE TO MAN MODE (1=ACTIVE)

479 420 17-ID-1102 — FORCE TO MAN MODE (1=ACTIVE)

480 430 17-ID-1103 — FORCE TO MAN MODE (1=ACTIVE)

481 490 17-ID-1701_shA — FORCE TO MAN MODE (1=ACTIVE)

482 492 17-ID-1701_shB — FORCE TO MAN MODE (1=ACTIVE)

473 130 17-ID-0301_shA — FORCE TO MAN MODE (1=ACTIVE)

487 132 17-ID-0301_shB — FORCE TO MAN MODE (1=ACTIVE)

484 480 17-ID-1403A — FORCE TO MAN MODE (1=ACTIVE)

485 482 17-ID-1403B_shA — FORCE TO MAN MODE (1=ACTIVE)

483 560 17-ID-1702 — FORCE TO MAN MODE (1=ACTIVE)

526 730 Appendix-7_shA — FORCE TO MAN MODE (1=ACTIVE)

528 732 Appendix-7_shB — FORCE TO MAN MODE (1=ACTIVE)

Deleted

17-XS-1010STO
Not used
as motor will OC. and trip
when the feeder is not
available. XSA=0

TAG	Logic Status
	0= 1=
	0= 1=
	0= 1=
	0= 1=
	0= 1=
	0= 1=
	0= 1=
	0= 1=
	0= 1=
	0= 1=
	0= 1=
	0= 1=
	0= 1=

25/10/22

Appendix6_sh A1

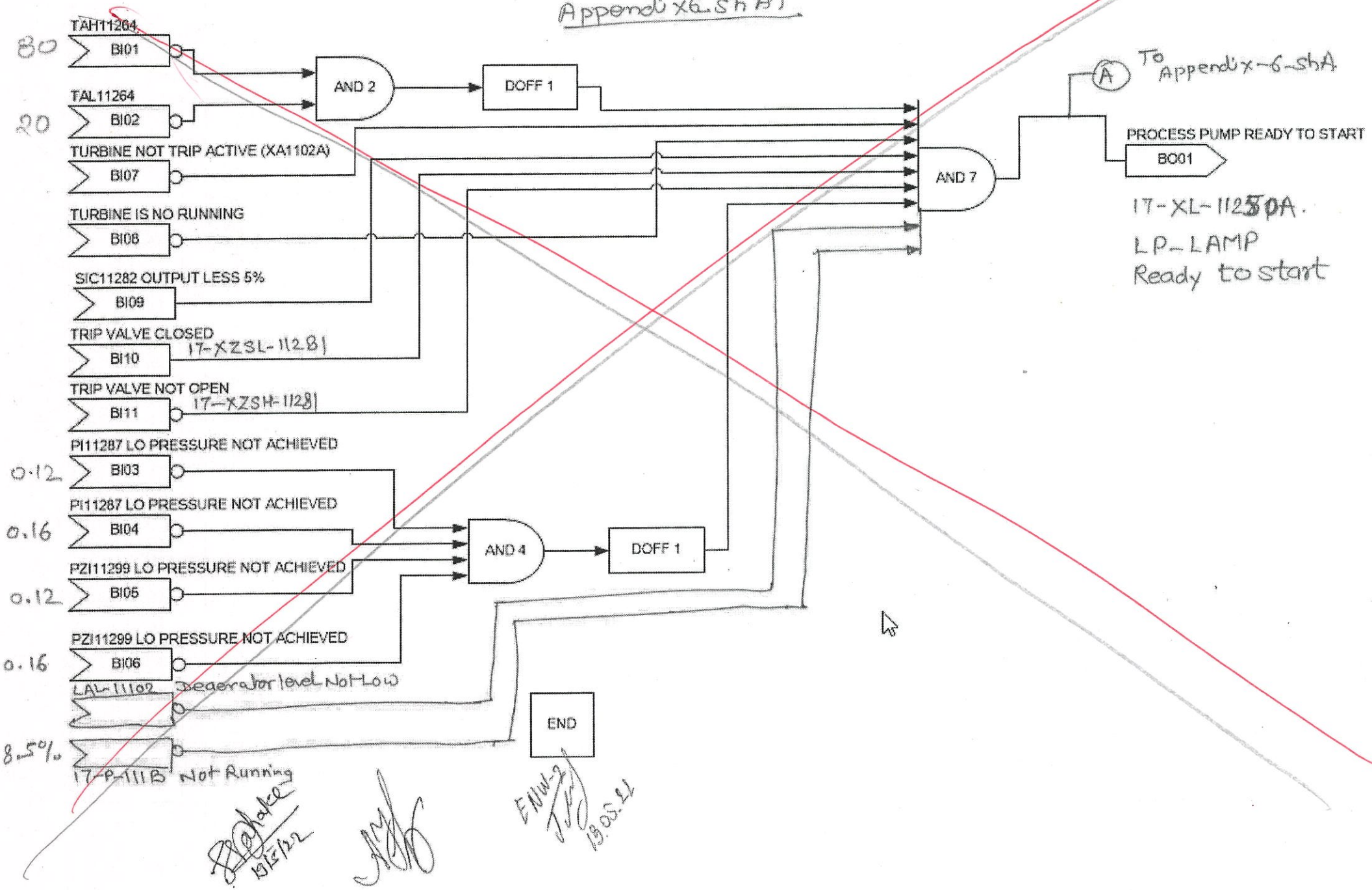

13/5/22

13.05.22

EUROCHEM

Tecnimont

Appendix-6_shA 17-P-111A TURBINE SEQUENCE

DCS LOGIC DIAGRAMS-AMMONIA UTILITIES

AMMONIA AND UREA PRODUCTION, KINGISEPP

3000 MTPD AMMONIA

TECNIMONT IDENTIFICATION CODE	
Document Number	Revision
4124-JK-DD-217000010	03
Sheet 720 next 722	
Sh.Rev. 03	
CUSTOMER IDENTIFICATION CODE	
-	03

INPUT

Logic Status	TAG
0= 1=	
0= 1=	0= Normal 1= closed
0= 1=	
0= 1=	
0= 1=	
0= 1=	
0= 1=	
0= 1=	
0= 1=	
0= 1=	
0= 1=	17-KI -126401 DCS MMS SAI
0= 1=	
0= 1=	
0= 1=	

DCS SOFTWARE

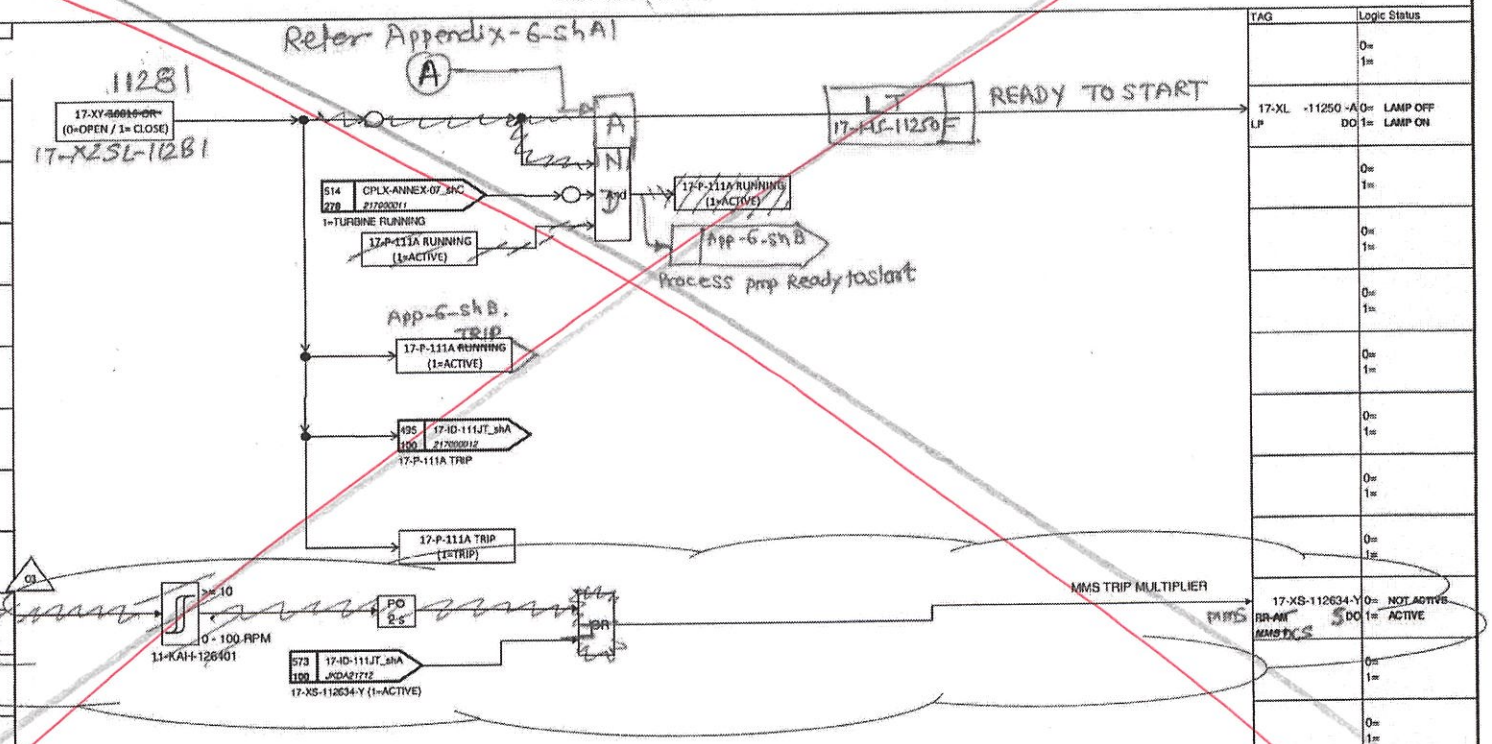

OUTPUT

TAG	Logic Status
	0= 1=
17-XL -11250 -A LP DO	0= LAMP OFF 1= LAMP ON
	0= 1=
	0= 1=
	0= 1=
	0= 1=
	0= 1=
	0= 1=
	0= 1=
	0= 1=
17-XS-112634-Y ~~RR-AM~~ MMS DCS DO	0= NOT ACTIVE 1= ACTIVE
	0= 1=
	0= 1=
	0= 1=

19/5/22

ENW-II 13.05.22

EUROCHEM

Tecnimont

Appendix-6_shB 17-P-111A TURBINE SEQUENCE

DCS LOGIC DIAGRAMS-AMMONIA UTILITIES

AMMONIA AND UREA PRODUCTION, KINGISEPP

3000 MTPD AMMONIA

TECNIMONT IDENTIFICATION CODE	
Document Number	Revision
4124-JK-DD-217000010	03
Sheet 722 next 724	
Sh.Rev. 03	
CUSTOMER IDENTIFICATION CODE	
-	03

INPUT

Logic Status	TAG
0= NO ACTION 1= START	17-HS -11256 DCS -
0= 1=	
0= NO ACTION 1= START	17-HS -11250 -A LP DI
0= 1=	
0= 1=	
0= LOCAL 1= REMOTE	17-HS -11250 -C LP DI
0= 1=	
0= NO ACTION 1= STOP	17-HS -11257 DCS -
0= NO ACTION 1= STOP	17-HS -11250 -B LP DI
0= 1=	
0= 1=	
0= 1=	
0= 1=	

DCS SOFTWARE

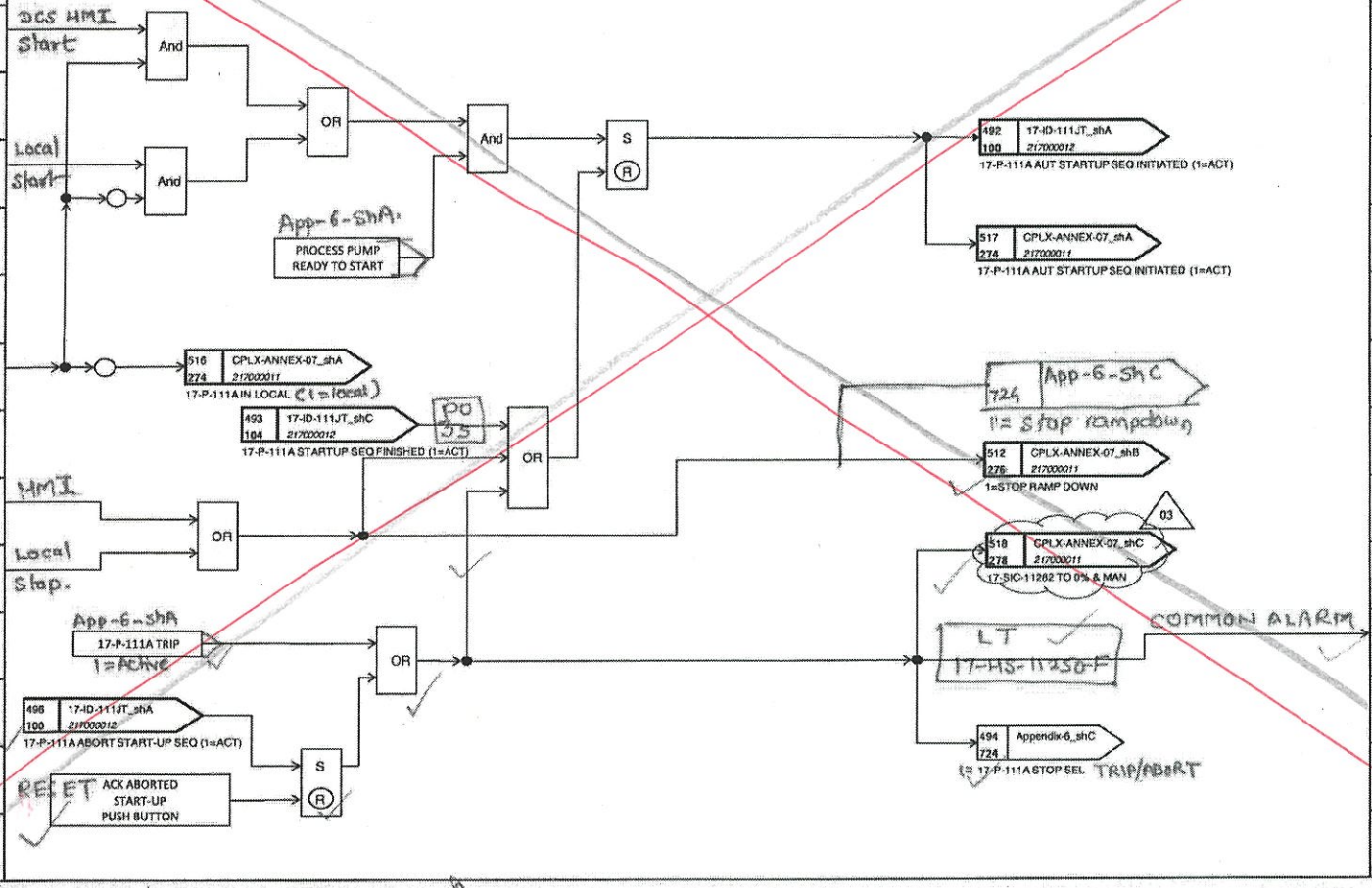

OUTPUT

TAG	Logic Status
	0= 1=
	0= 1=
	0= 1=
	0= 1=
	0= 1=
	0= 1=
	0= 1=
	0= 1=
XL 17-XA -11250 -B LP DO	0= LAMP OFF 1= LAMP ON
	0= 1=
	0= 1=

Schake 10.5.22

ENW-P 18.05.22

EUROCHEM

Tecnimont

Appendix-6_shC 17-P-111A TURBINE SEQUENCE

DCS LOGIC DIAGRAMS-AMMONIA UTILITIES

AMMONIA AND UREA PRODUCTION, KINGISEPP

3000 MTPD AMMONIA

TECNIMONT IDENTIFICATION CODE	
Document Number	Revision
4124-JK-DD-217000010	03
Sheet 724 next 730	
Sh.Rev. 03	
CUSTOMER IDENTIFICATION CODE	
.	03

INPUT

Logic Status	TAG
0= 1=	
0= 1=	
0= 1=	
0= 1=	
0= 1=	
0= 1=	
0= 1=	
0= 1=	
0= 1=	
0= 1=	
0= 1=	
0= 1=	
0= 1=	

DCS SOFTWARE

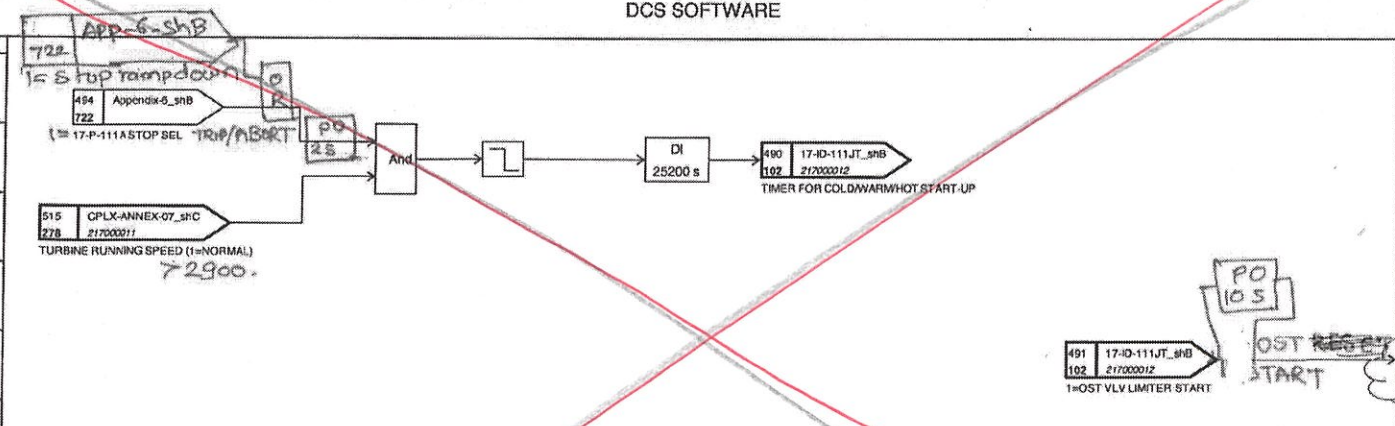

Timer 7Hrs (25200 sec) is stop when Turbine speed > 2900 rpm OR timer is complete. Timer is started from Last shutdown.

OUTPUT

TAG	Logic Status
	0= 1=
	0= 1=
	0= 1=
	0= 1=
	0= 1=
	0= 1=
	0= 1=
	0= 1=
	0= 1=
	0= 1=
	0= 1=
	0= 1=
	0= 1=

19/5/22

ENW-2 13.05.22

EUROCHEM

Tecnimont

Appendix-7_shA APPENDIX-7 MOTORS

DCS LOGIC DIAGRAMS-AMMONIA UTILITIES

AMMONIA AND UREA PRODUCTION, KINGISEPP

3000 MTPD AMMONIA

TECNIMONT IDENTIFICATION CODE	
Document Number	Revision
4124-JK-DD-217000010	03
Sheet 730 next 732	
Sh.Rev. 02	
CUSTOMER IDENTIFICATION CODE	
-	03

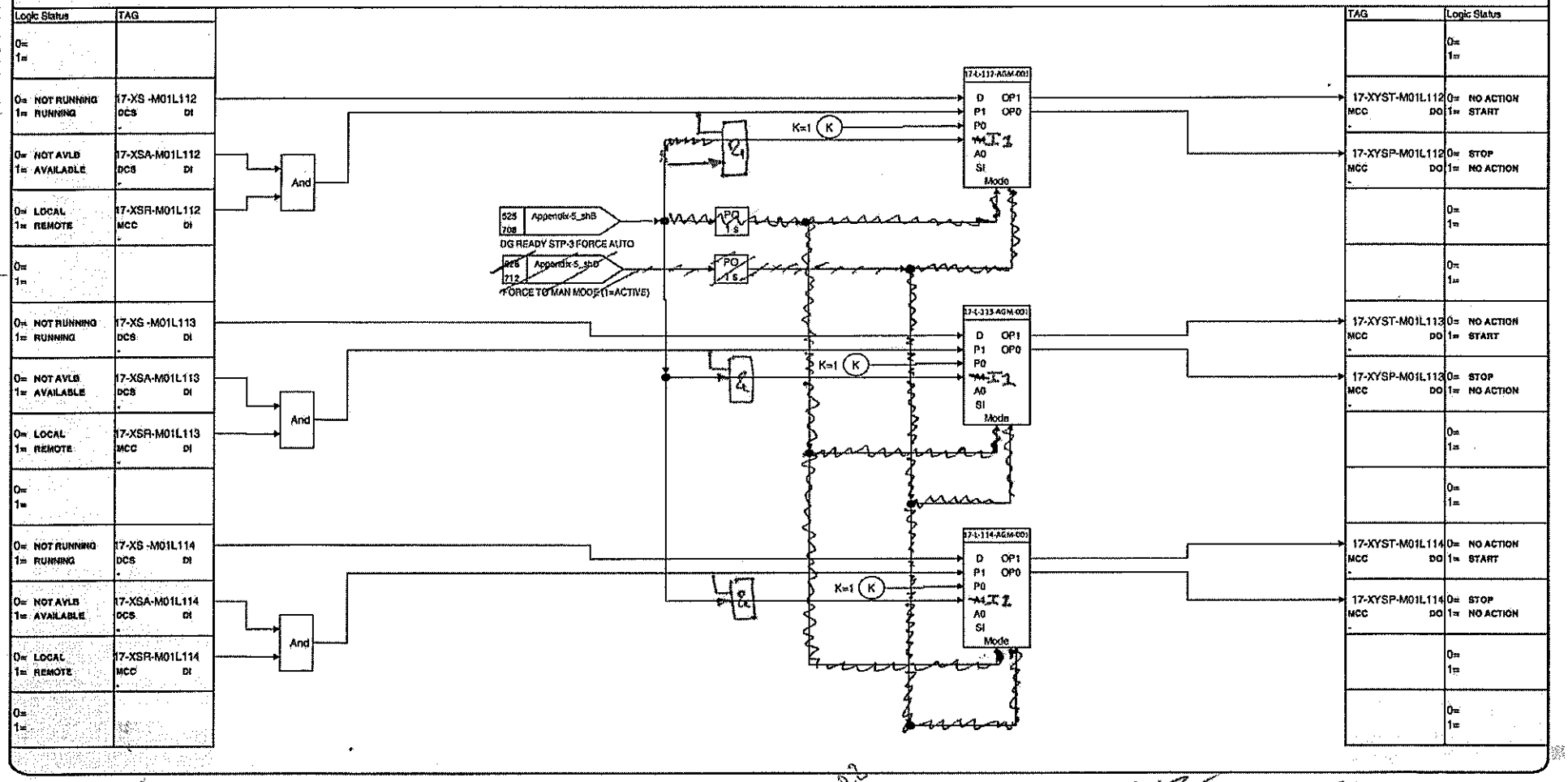

16/2/22

16.02.22

16.02.2022

EuroChem	Appendix-7_shB APPENDIX-7 MOTORS DCS LOGIC DIAGRAMS-AMMONIA UTILITIES AMMONIA AND UREA PRODUCTION, KINGISEPP	TECNIMONT IDENTIFICATION CODE Document Number: 4124-JK-DD-217000010 Revision: 03 Sheet 732 next 750 Sh.Rev. 03
Tecnimont	3000 MTPD AMMONIA	CUSTOMER IDENTIFICATION CODE 03

INPUT

Logic Status	TAG
0= 1=	
0= NOT RUNNING 1= RUNNING	17-XS -E111 MCC DI
0= NOT AVLB 1= AVAILABLE	17-XSA -E111 MCC DI
0= LOCAL 1= REMOTE	17-XSR -E111 MCC DI
0= 1=	
0= 1=	
0= 1=	
0= 1=	
0= 1=	
0= 1=	
0= 1=	
0= 1=	
0= 1=	
0= 1=	

DCS SOFTWARE

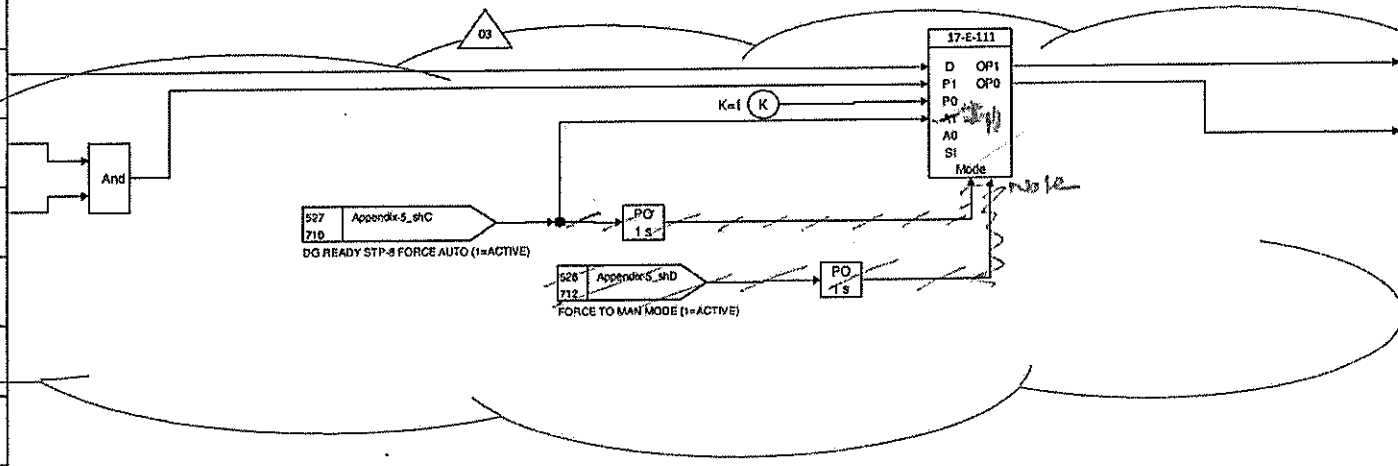

note - motor is set to Auto mode using M1 input PIN (2 sec pulse) of motor block.

OUTPUT

TAG	Logic Status
	0= 1=
17-XYST -E111 MCC DO	0= NO ACTION 1= START
17-XYSP -E111 MCC DO	0= STOP 1= NO ACTION
	0= 1=
	0= 1=
	0= 1=
	0= 1=
	0= 1=
	0= 1=
	0= 1=
	0= 1=
	0= 1=
	0= 1=
	0= 1=

24/2/22

24.02.2022

17-ID-0770A

EUROCHEM

Tecnimont

~~Appendix-8_shA~~ ~~APPENDIX-8 CT FAN~~ 17-P-071LK-A

DCS LOGIC DIAGRAMS-AMMONIA UTILITIES

AMMONIA AND UREA PRODUCTION, KINGISEPP

3000 MTPD AMMONIA

TECNIMONT IDENTIFICATION CODE	
Document Number	Revision
4124-JK-DD-217000010	03
Sheet 750 next 751	
Sh.Rev. 03	
CUSTOMER IDENTIFICATION CODE	
-	03

INPUT

Logic Status	TAG
0= NOT RUNNING 1= RUNNING	17-XSF-M071LK-A MCC DI
0= NOT RUNNING 1= RUNNING	17-XSB-M071LK-A MCC DI
0= NOT AVAILAB 1= AVAILABLE	17-XSA-M071LK-A MCC DI
0= LOCAL 1= REMOTE	17-XSR-M071LK-A MCC DI
0= 1=	
0= NO ACTION 1= TRIP	17-XST-M071LK-AOR DCS SDI ESD
0= 1=	
0= 1=	
0= 1=	
0= 1=	
0= 1=	
0= 1=	
0= 1=	

DCS SOFTWARE

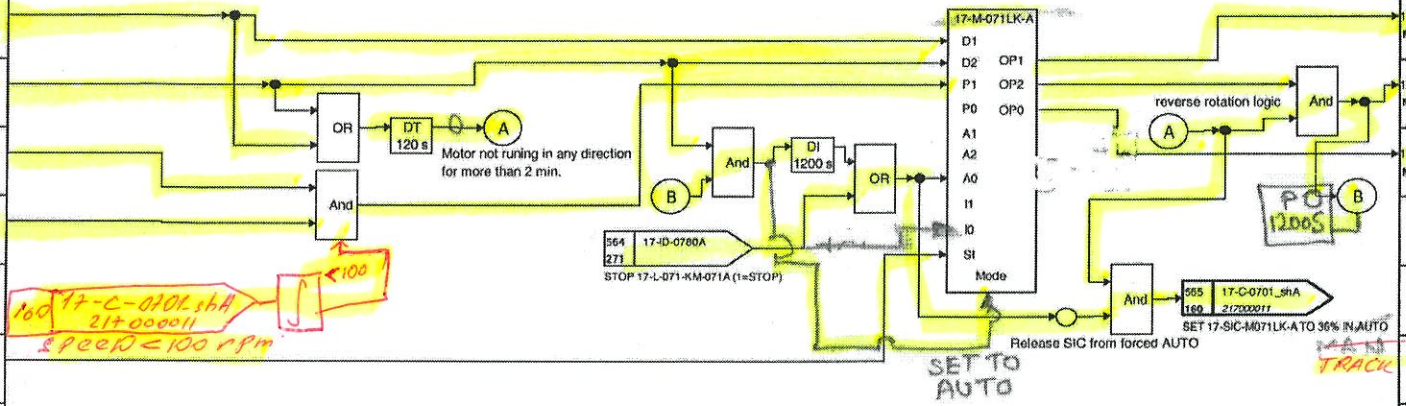

OUTPUT

TAG	Logic Status
17-XYSTF-M071LK-A MCC DO	0= NO ACTION 1= START
17-XYSTB-M071LK-A MCC DO	0= NO ACTION 1= START
17-XYSP-M071LK-A MCC DO	0= STOP 1= NO ACTION
	0= 1=
	0= 1=
	0= 1=
	0= 1=
	0= 1=
	0= 1=
	0= 1=
	0= 1=
	0= 1=
	0= 1=

Note: Motor is set to Auto using M1 input pin (2 sec pulse) of motor block.

11.02.25

TKC 11.02.25

11.02.25

11/2/22

17.02.2022

Eurochem

EUROCHEM

Tecnimont

17-ID-0770B

Appendix-8_shB APPENDIX-8 CT FAN 17-P-071LK-B

DCS LOGIC DIAGRAMS-AMMONIA UTILITIES

AMMONIA AND UREA PRODUCTION, KINGISEPP

3000 MTPD AMMONIA

TECNIMONT IDENTIFICATION CODE	
Document Number	Revision
4124-JK-DD-217000010	03
Sheet 751	next 752
Sh.Rev. 03	
CUSTOMER IDENTIFICATION CODE	
-	03

INPUT

Logic Status	TAG 03
0= NOT RUNNING 1= RUNNING	17-XSF-M071LK-B MCC DI
0= NOT RUNNING 1= RUNNING	17-XSB-M071LK-B MCC DI
0= NOT AVAILAB 1= AVAILABLE	17-XSA-M071LK-B MCC DI
0= LOCAL 1= REMOTE	17-XSR-M071LK-B MCC DI
0= 1=	
0= NO ACTION 1= TRIP	17-XST-M071LK-BOR DCS SDI ESD
0= 1=	
0= 1=	
0= 1=	
0= 1=	
0= 1=	
0= 1=	
0= 1=	
0= 1=	

DCS SOFTWARE

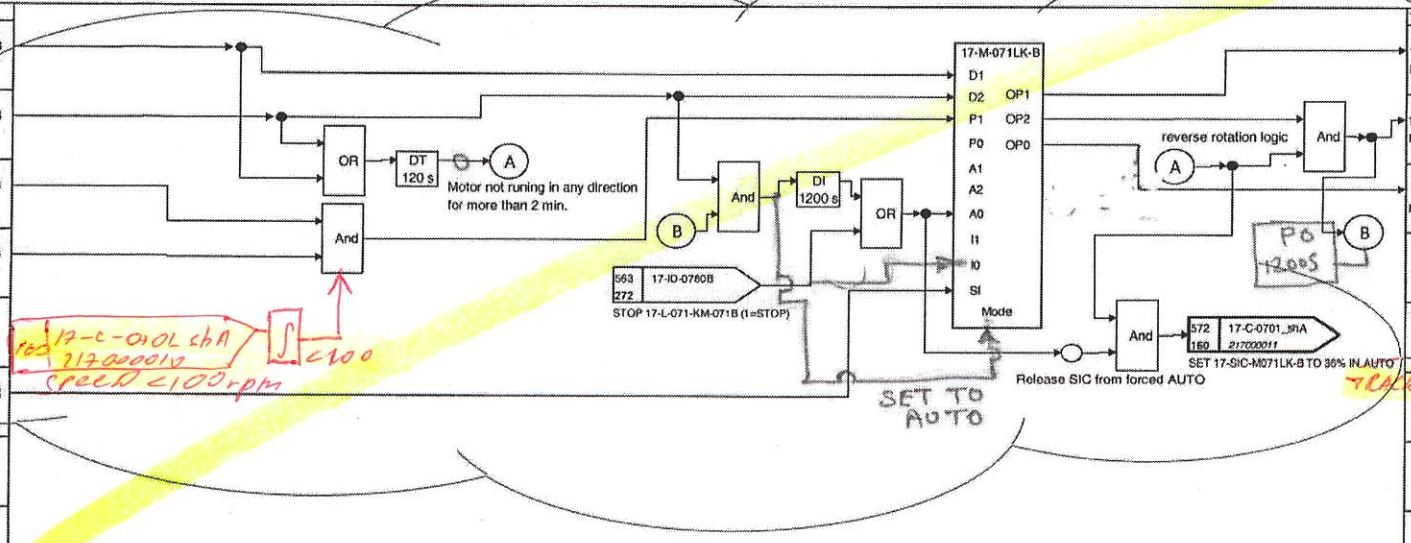

OUTPUT

TAG	Logic Status
17-XYSTF-M071LK-B MCC DO	0= NO ACTION 1= START
17-XYSTB-M071LK-B MCC DO	0= NO ACTION 1= START
17-XYSP-M071LK-B MCC DO	0= STOP 1= NO ACTION
	0= 1=
	0= 1=
	0= 1=
	0= 1=
	0= 1=
	0= 1=
	0= 1=
	0= 1=
	0= 1=

Note:- Motor is set to Auto using M1 input pin (2sec pulse) of motor block.

11.02.25 PKC 11.02.25 11.02.25 11/2/22

17.02.2022 Eurochem

EUROCHEM

Tecnimont

17-LD-0770C

~~Appendix-8_shC~~ ~~APPENDIX-8 CT~~ FAN 17-P-071LK-C

DCS LOGIC DIAGRAMS-AMMONIA UTILITIES

AMMONIA AND UREA PRODUCTION, KINGISEPP

3000 MTPD AMMONIA

TECNIMONT IDENTIFICATION CODE	
Document Number	Revision
4124-JK-DD-217000010	03
Sheet 752 next 753	
Sh.Rev. 03	
CUSTOMER IDENTIFICATION CODE	
-	03

INPUT

Logic Status	TAG 03
0= NOT RUNNING 1= RUNNING	17-XSF-M071LK-C MCC DI
0= NOT RUNNING 1= RUNNING	17-XSB-M071LK-C MCC DI
0= NOT AVAILAB 1= AVAILABLE	17-XSA-M071LK-C MCC DI
0= LOCAL 1= REMOTE	17-XSR-M071LK-C MCC DI
0= 1=	
0= NO ACTION 1= TRIP	17-XST-M071LK-COR DCS SDI ESD
0= 1=	
0= 1=	
0= 1=	
0= 1=	
0= 1=	
0= 1=	
0= 1=	

DCS SOFTWARE

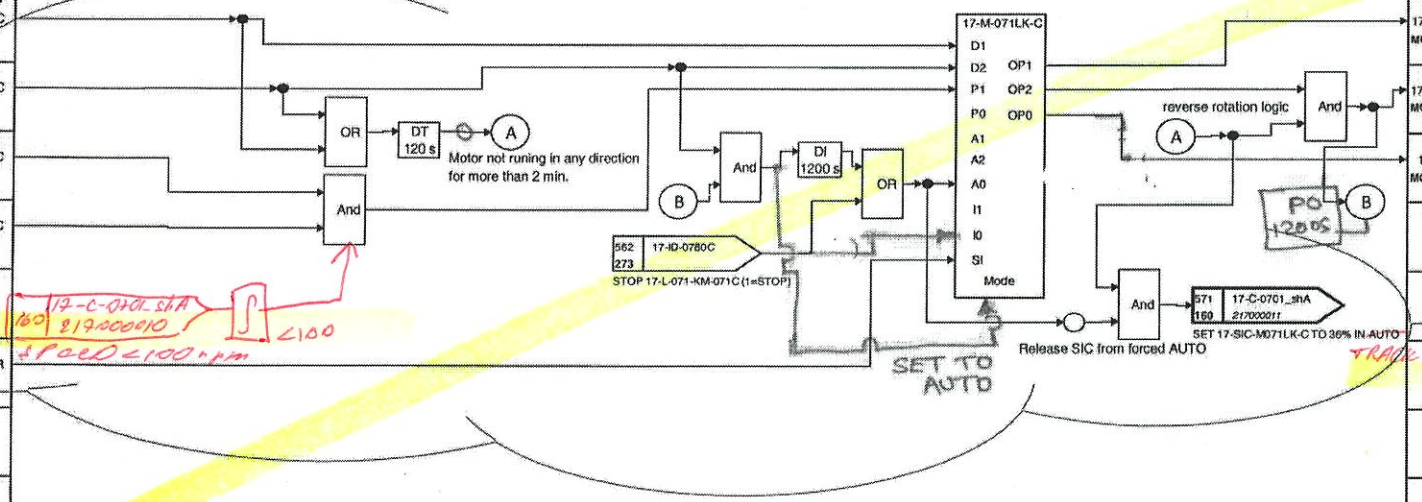

OUTPUT

TAG	Logic Status
17-XYSTF-M071LK-C MCC DO	0= NO ACTION 1= START
17-XYSTB-M071LK-C MCC DO	0= NO ACTION 1= START
17-XYSP-M071LK-C MCC DO	0= STOP 1= NO ACTION
	0= 1=
	0= 1=
	0= 1=
	0= 1=
	0= 1=
	0= 1=
	0= 1=
	0= 1=
	0= 1=

Note: motor is set to Auto using M1 input pin (2 sec pulse) of motor block.

11.02.25 FKC 11.02.25 11.02.25 11/2/22

17.02.2022

Eurochem

EUROCHEM

Tecnimont

17-ID-0770 D ~~Appendix-8_shD~~ ~~APPENDIX-8-GT~~ FAN 17-P-071 LK-D

DCS LOGIC DIAGRAMS-AMMONIA UTILITIES

AMMONIA AND UREA PRODUCTION, KINGISEPP

3000 MTPD AMMONIA

TECNIMONT IDENTIFICATION CODE	
Document Number	Revision
4124-JK-DD-217000010	03
Sheet 753	next 754
Sh.Rev. 03	
CUSTOMER IDENTIFICATION CODE	
-	03

INPUT

Logic Status	TAG 03
0= NOT RUNNING 1= RUNNING	17-XSF-M071LK-D MCC DI
0= NOT RUNNING 1= RUNNING	17-XSB-M071LK-D MCC DI
0= NOT AVAILAB 1= AVAILABLE	17-XSA-M071LK-D MCC DI
0= LOCAL 1= REMOTE	17-XSR-M071LK-D MCC DI
0= 1=	
0= NO ACTION 1= TRIP	17-XST-M071LK-DOR DCS SDI ESD
0= 1=	
0= 1=	
0= 1=	
0= 1=	
0= 1=	
0= 1=	
0= 1=	
0= 1=	

DCS SOFTWARE

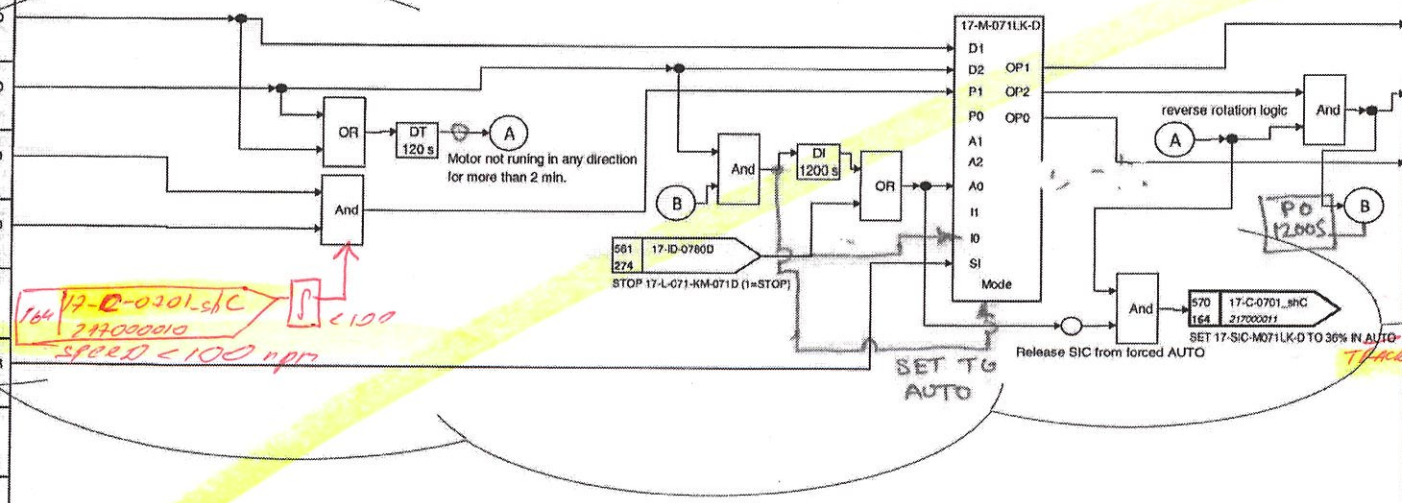

OUTPUT

TAG	Logic Status
17-XYSTF-M071LK-D MCC DO	0= NO ACTION 1= START
17-XYSTB-M071LK-D MCC DO	0= NO ACTION 1= START
17-XYSP-M071LK-D MCC DO	0= STOP 1= NO ACTION
	0= 1=
	0= 1=
	0= 1=
	0= 1=
	0= 1=
	0= 1=
	0= 1=
	0= 1=
	0= 1=
	0= 1=

Note:- Motor is set to Auto using M1 input pin (2 sec pulse) of motor block

11.02.25 PMC 11.02.25 11.02.25 11/2/22

17-02-2022 Eurochem

EUROCHEM

Tecnimont

17-ID-0770E ~~Appendix-8_shE~~ ~~APPENDIX-8~~ CT FAN 17-P-071LK-E

DCS LOGIC DIAGRAMS-AMMONIA UTILITIES

AMMONIA AND UREA PRODUCTION, KINGISEPP

3000 MTPD AMMONIA

TECNIMONT IDENTIFICATION CODE	
Document Number	Revision
4124-JK-DD-217000010	03
Sheet 754	next 755
Sh.Rev. 03	
CUSTOMER IDENTIFICATION CODE	
-	03

INPUT 03

Logic Status	TAG
0= NOT RUNNING 1= RUNNING	17-XSF-M071LK-E MCC DI
0= NOT RUNNING 1= RUNNING	17-XSB-M071LK-E MCC DI
0= NOT AVAILAB 1= AVAILABLE	17-XSA-M071LK-E MCC DI
0= LOCAL 1= REMOTE	17-XSR-M071LK-E MCC DI
0= 1=	
0= NO ACTION 1= TRIP	17-XST-M071LK-EOR DCS SOI ESD
0= 1=	
0= 1=	
0= 1=	
0= 1=	
0= 1=	
0= 1=	
0= 1=	

DCS SOFTWARE

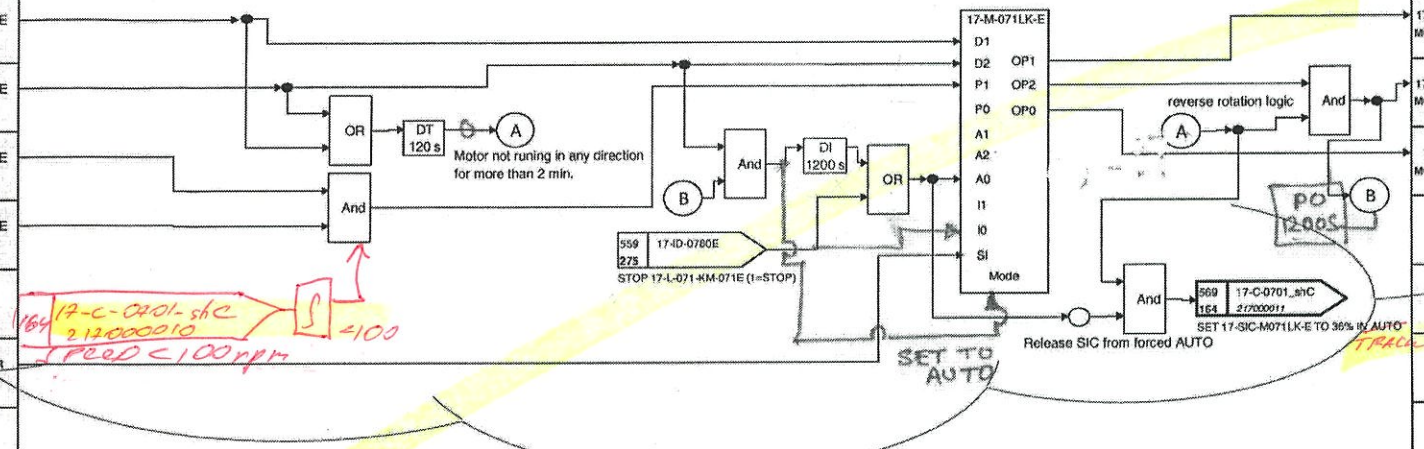

OUTPUT

TAG	Logic Status
17-XYSTF-M071LK-E MCC DO	0= NO ACTION 1= START
17-XYSTB-M071LK-E MCC DO	0= NO ACTION 1= START
17-XYSP-M071LK-E MCC DO	0= STOP 1= NO ACTION
	0= 1=
	0= 1=
	0= 1=
	0= 1=
	0= 1=
	0= 1=
	0= 1=
	0= 1=
	0= 1=

Note:- Motor is set to Auto using m1 input pin (2 sec pulse) of motor block.

11.02.26

11.02.26 MCC 11.02.26

11/2/22

17.02.2022

Eurochem

17-ID-0770F ~~Appendix-8_shF~~ ~~APPENDIX-8~~ CT FAN 17-P-071LK-F

EUROCHEM

Tecnimont

DCS LOGIC DIAGRAMS-AMMONIA UTILITIES

AMMONIA AND UREA PRODUCTION, KINGISEPP

3000 MTPD AMMONIA

TECNIMONT IDENTIFICATION CODE	
Document Number	Revision
4124-JK-DD-217000010	03
Sheet 755 next 756	
Sh.Rev. 03	
CUSTOMER IDENTIFICATION CODE	
-	03

INPUT 03

Logic Status	TAG
0= NOT RUNNING 1= RUNNING	17-XSF-M071LK-F MCC DI
0= NOT RUNNING 1= RUNNING	17-XSB-M071LK-F MCC DI
0= NOT AVAILAB 1= AVAILABLE	17-XSA-M071LK-F MCC DI
0= LOCAL 1= REMOTE	17-XSR-M071LK-F MCC DI
0= 1=	
0= NO ACTION 1= TRIP	17-XST-M071LK-FOR DCS ESD BDI
0= 1=	
0= 1=	
0= 1=	
0= 1=	
0= 1=	
0= 1=	
0= 1=	

DCS SOFTWARE

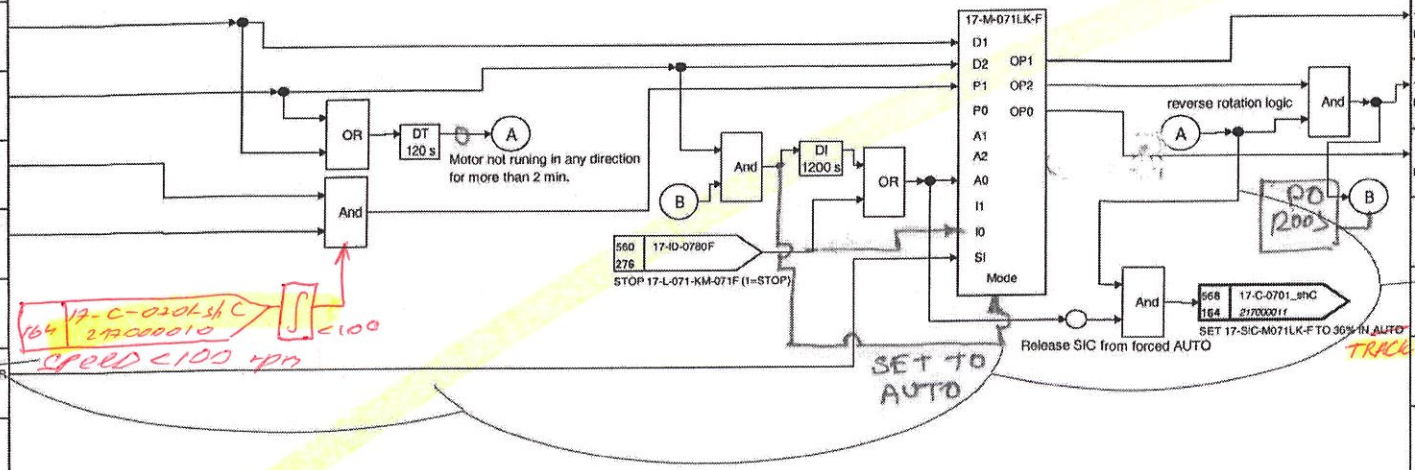

OUTPUT

TAG	Logic Status
17-XYSTF-M071LK-F MCC DO	0= NO ACTION 1= START
17-XYSTB-M071LK-F MCC DO	0= NO ACTION 1= START
17-XYSP-M071LK-F MCC DO	0= STOP 1= NO ACTION
	0= 1=
	0= 1=
	0= 1=
	0= 1=
	0= 1=
	0= 1=
	0= 1=
	0= 1=
	0= 1=
	0= 1=

Note :- Motor is set to Auto using M1 input pin (2 sec pulse) of motor block.

11.02.25

11.02.25 TKC 11.02.25

11/2/22

17.02.2022 Eurochem

EUROCHEM

Tecnimont

17-TD-0770G ~~Appendix-8_shG~~ APPENDIX-8 CT FAN 17-P-071LK-G

DCS LOGIC DIAGRAMS-AMMONIA UTILITIES

AMMONIA AND UREA PRODUCTION, KINGISEPP

3000 MTPD AMMONIA

TECNIMONT IDENTIFICATION CODE	
Document Number	Revision
4124-JK-DD-217000010	03
Sheet 756 next 757	
Sh.Rev. 03	
CUSTOMER IDENTIFICATION CODE	
	03

INPUT 03 — DCS SOFTWARE — OUTPUT

Logic Status	TAG
0= NOT RUNNING 1= RUNNING	17-XSF-M071LK-G MCC DI
0= NOT RUNNING 1= RUNNING	17-XSB-M071LK-G MCC DI
0= NOT AVAILAB 1= AVAILABLE	17-XSA-M071LK-G MCC DI
0= LOCAL 1= REMOTE	17-XSR-M071LK-G MCC DI
0= 1=	
0= NO ACTION 1= TRIP	17-XST-M071LK-GGG DCS SDI ESD
0= 1=	
0= 1=	
0= 1=	
0= 1=	
0= 1=	
0= 1=	
0= 1=	

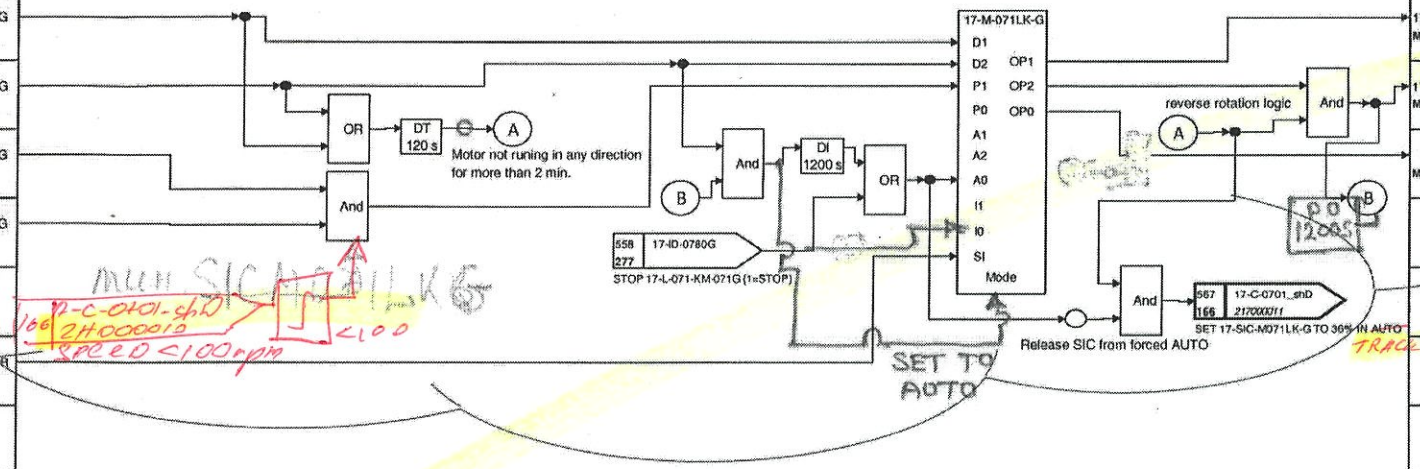

TAG	Logic Status
17-XYSTF-M071LK-G MCC DO	0= NO ACTION 1= START
17-XYSTB-M071LK-G MCC DO	0= NO ACTION 1= START
17-XYSP-M071LK-G MCC DO	0= STOP 1= NO ACTION
	0= 1=
	0= 1=
	0= 1=
	0= 1=
	0= 1=
	0= 1=
	0= 1=
	0= 1=
	0= 1=
	0= 1=

Note :- Motor is set to Auto using M1 input pin (2 sec pulse) of motor block

11.02.25 11.02.25 11.02.25 11/2/22 17.02.2022 Eurochem

EUROCHEM

Tecnimont

17-ID-0770H ~~Appendix-8_shH~~ ~~APPENDIX-8~~ CT FAN 17-P-071LK-H

DCS LOGIC DIAGRAMS-AMMONIA UTILITIES

AMMONIA AND UREA PRODUCTION, KINGISEPP

3000 MTPD AMMONIA

TECNIMONT IDENTIFICATION CODE	
Document Number	Revision
4124-JK-DD-217000010	03
Sheet 757	next -
Sh.Rev. 03	
CUSTOMER IDENTIFICATION CODE	
-	03

INPUT 03

DCS SOFTWARE

OUTPUT

Logic Status	TAG
0= NOT RUNNING 1= RUNNING	17-XSF-M071LK-H MCC DI
0= NOT RUNNING 1= RUNNING	17-XSB-M071LK-H MCC DI
0= NOT AVAILAB 1= AVAILABLE	17-XSA-M071LK-H MCC DI
0= LOCAL 1= REMOTE	17-XSR-M071LK-H MCC DI
0= 1=	
0= NO ACTION 1= TRIP	17-XST-M071LK-HOR DCS SDI ESD
0= 1=	
0= 1=	
0= 1=	
0= 1=	
0= 1=	
0= 1=	
0= 1=	
0= 1=	

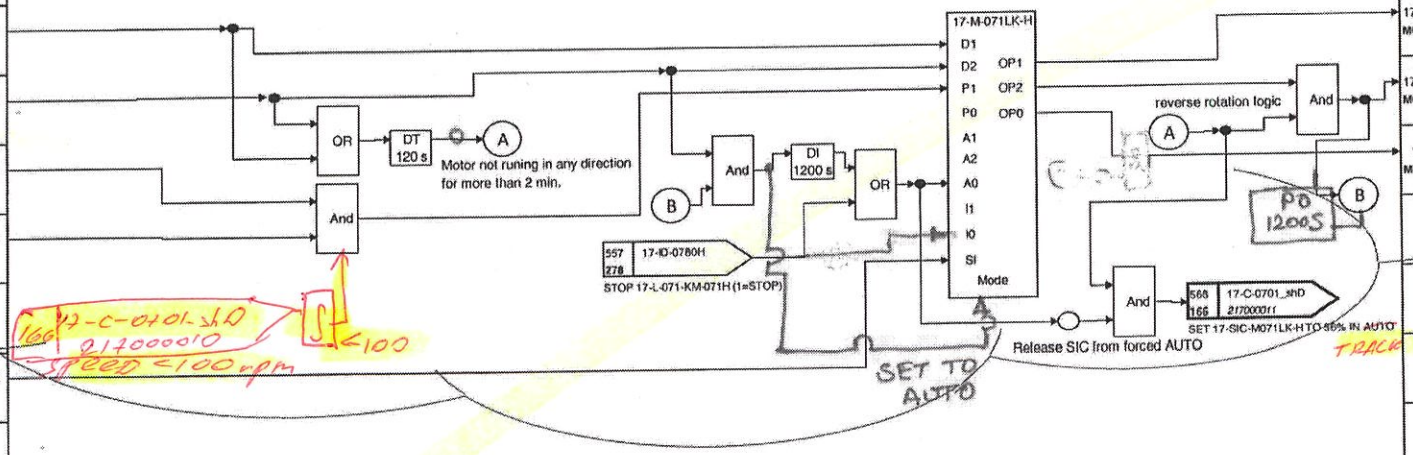

TAG	Login Status
17-XYSTF-M071LK-H MCC DO	0= NO ACTION 1= START
17-XYSTB-M071LK-H MCC DO	0= NO ACTION 1= START
17-XYSP-M071LK-H MCC DO	0= STOP 1= NO ACTION
	0= 1=
	0= 1=
	0= 1=
	0= 1=
	0= 1=
	0= 1=
	0= 1=
	0= 1=
	0= 1=
	0= 1=

Note : Motor is set to Auto using M1 input pin (a 1sec pulse) of motor block

11.02.25

11.02.25 PKC

11.02.25

11/2/22

17.02.2022

Eurochem

Appendix-8A Nitrogen unit Exchange signal. Sheet 770

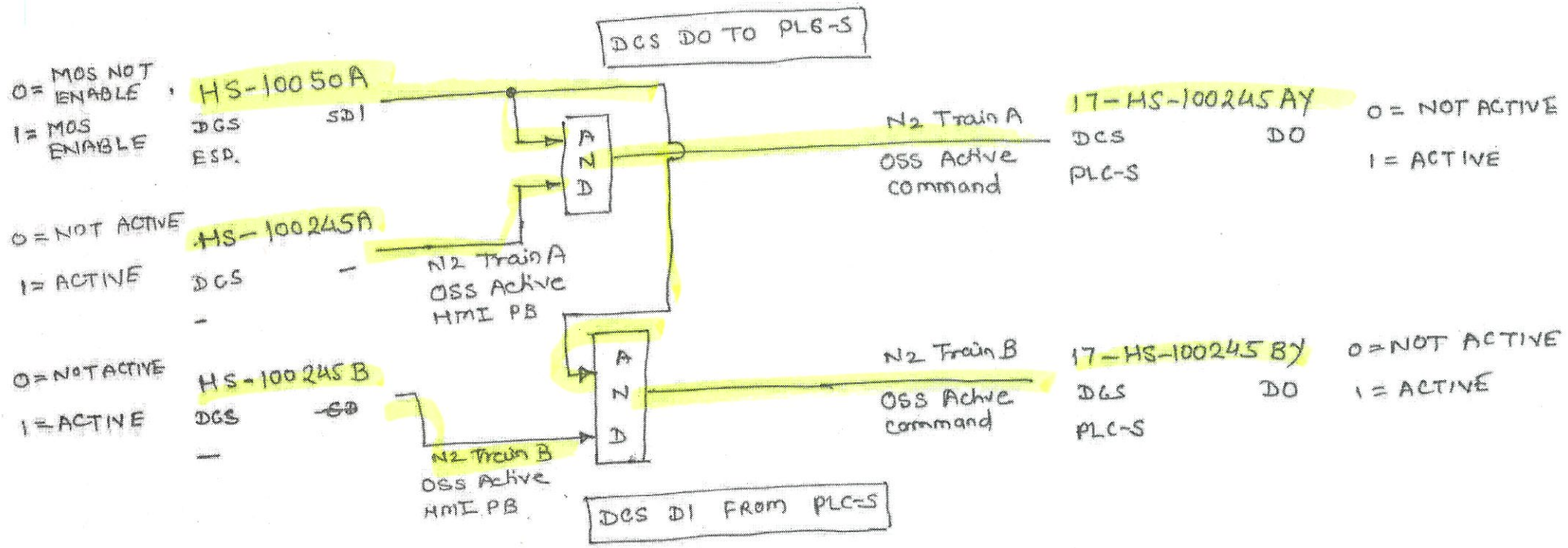

0= NOT ACTIVE
1= ACTIVE
17-XA-100245AX
DCS
PLC-S
DI
N2 Train A OSS Active

0= NOT ACTIVE
1= ACTIVE
17-XA-100265-BX
DCS
PLC-S
DI
N2 Train B OSS ACTIVE

21.02.25

PKC
21.02.25

Appendix 8A Boiler

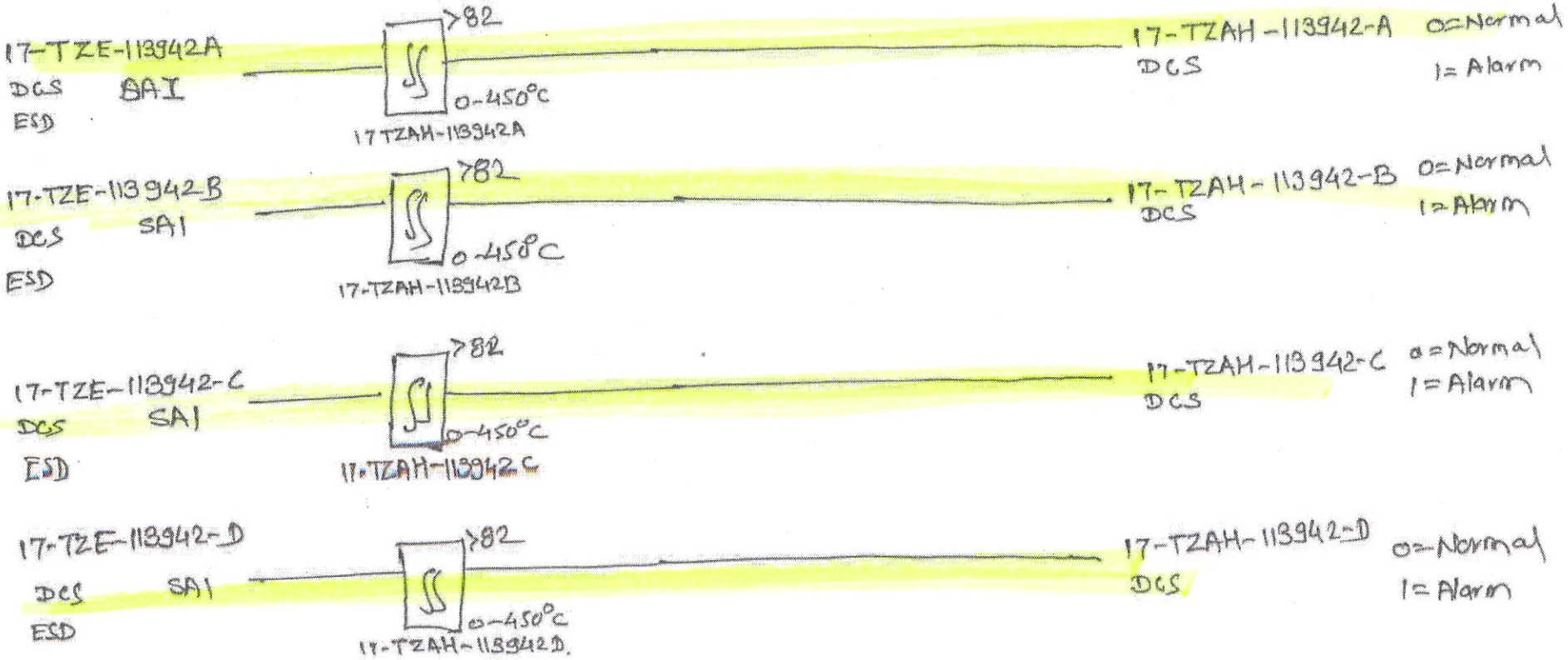

21.02.25

TKC
21.02.25

P&ID:
4124-FB-VD-BD003172111111310.