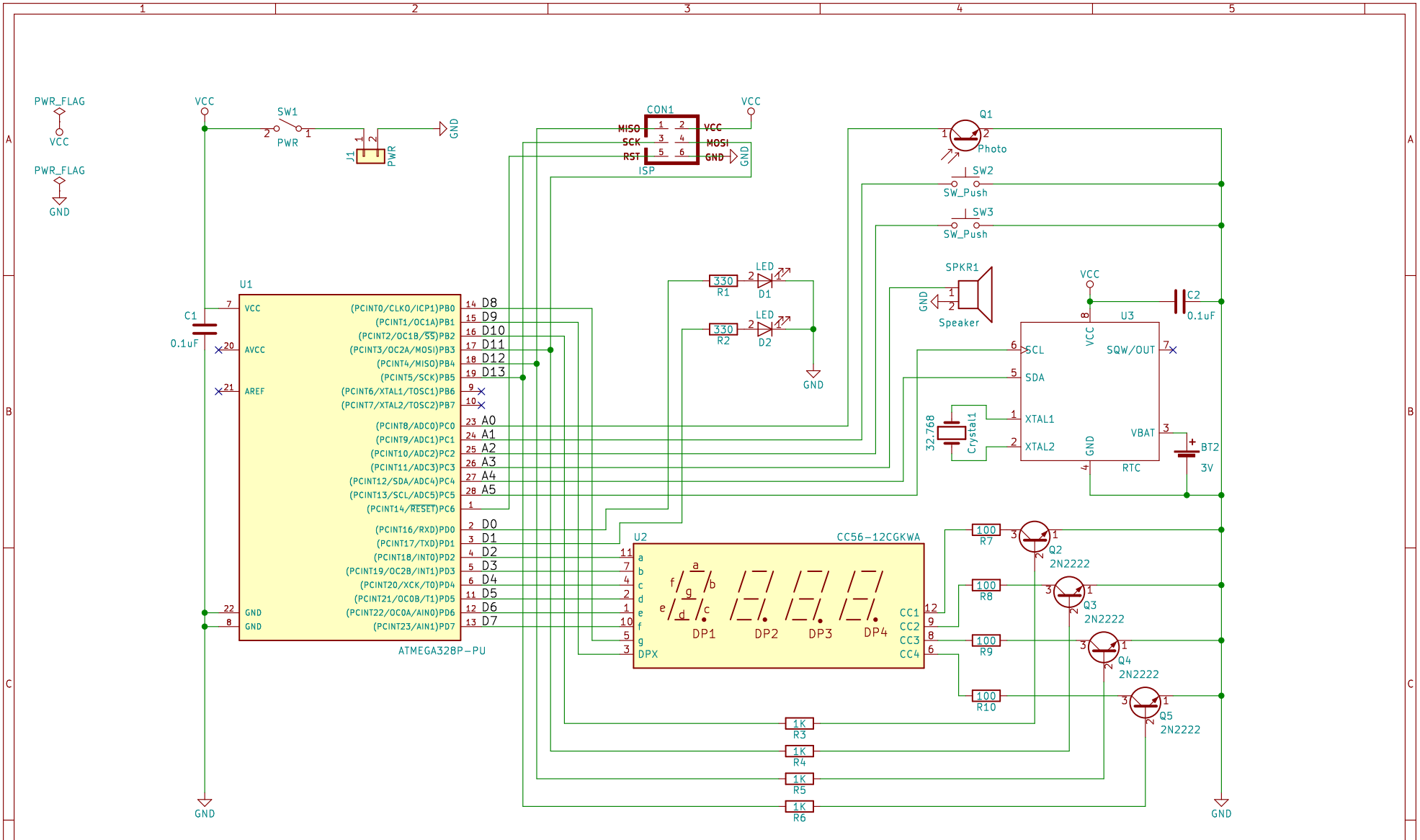

https://www.electronicshub.org/arduino-4-digit-7-segment-led-display/

https://www.digikey.com/product-detail/en/adafruit-industries-llc/811/1528-1509-ND/5774235

Maker's Box

Sheet: /

File: project.sch

Title: Arduino Clock

Size: USLetter	Date:	**Rev:**
KiCad E.D.A. kicad 4.0.7		Id: 1/1