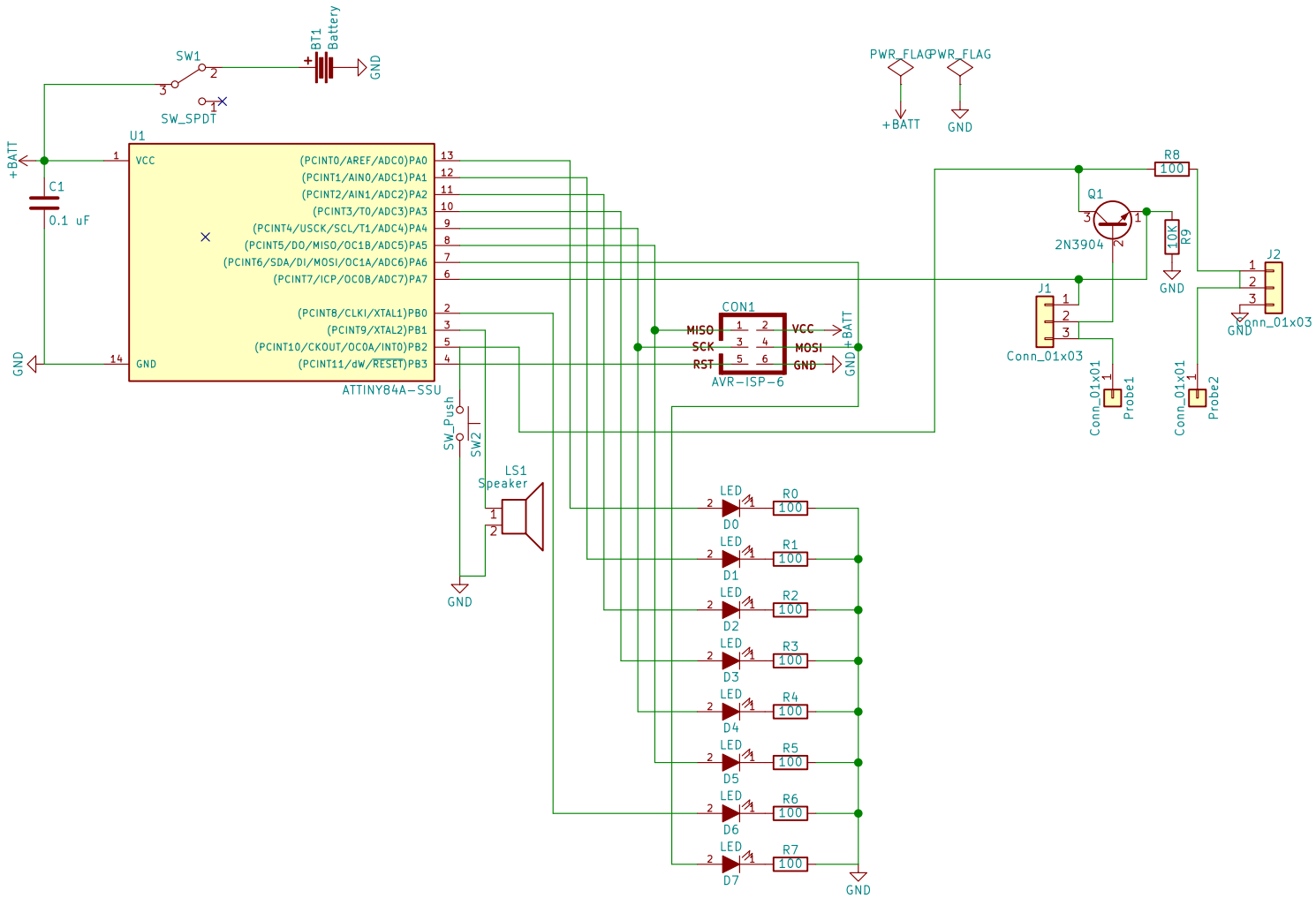

MakersBox

Sheet: /

File: project.sch

Title: Moisture Sensor

Size: USLetter	Date: 2018-03-13	**Rev: 0.0**
KiCad E.D.A. kicad 4.0.7		Id: 1/1