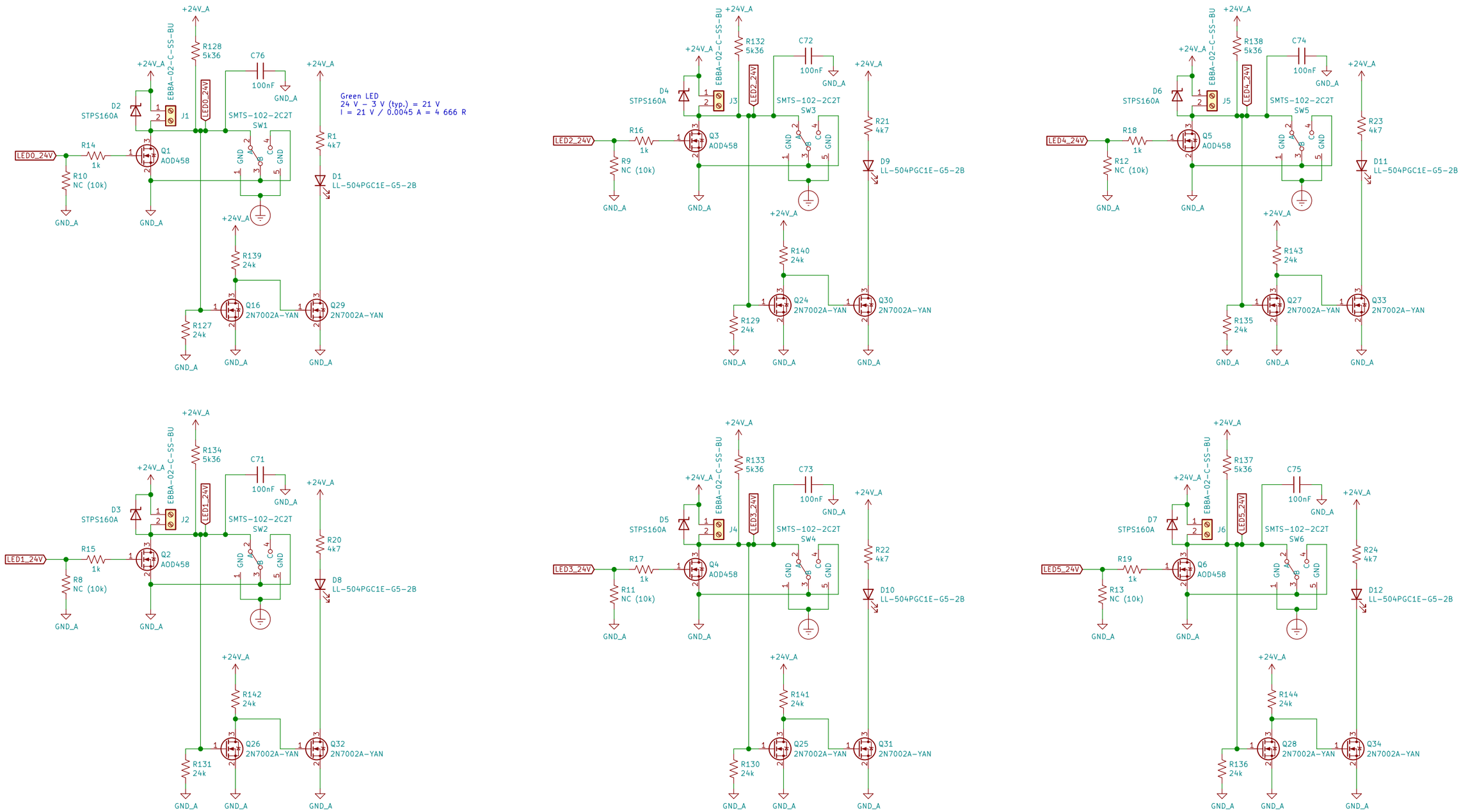

Roman Labovsky (roman-labovsky.cz)

Sheet: /Outputs – switches 0–5/

File: outputs-switches-0-5.sch

Title: Outputs – switches 1–6

Size: A3	Date: 2023-07-15	Rev: v2.0
KiCad E.D.A. kicad (5.1.6)-1		Id: 2/6