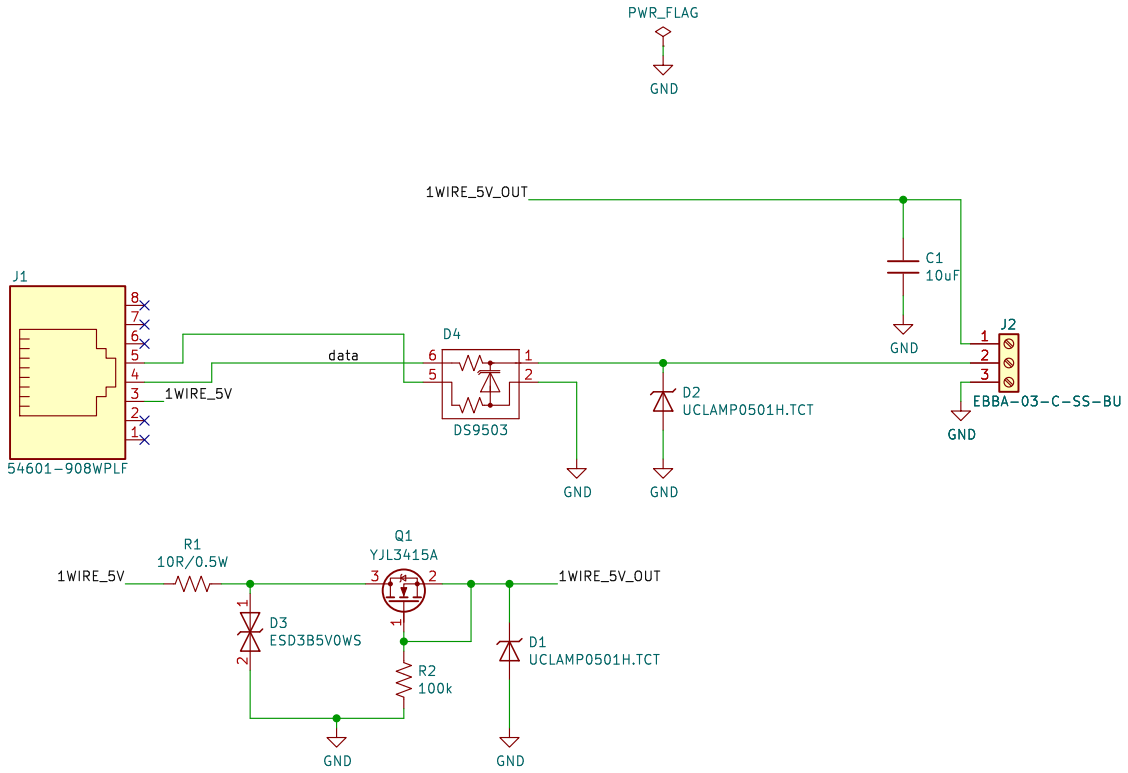

Mounting holes for screws

H1
mounting_hole_pad_3.2x6mm

H2
mounting_hole_pad_3.2x6mm

H3
mounting_hole_pad_3.2x6mm

H4
mounting_hole_pad_3.2x6mm

Roman Labovsky (roman-labovsky.cz)

Sheet: /
File: connecting-connector-1-wire.kicad_sch

Title: Connection connector 1-Wire bus

Size: A4	Date: 2023-05-26	**Rev: v1.0**
KiCad E.D.A. kicad 7.0.9		Id: 1/1