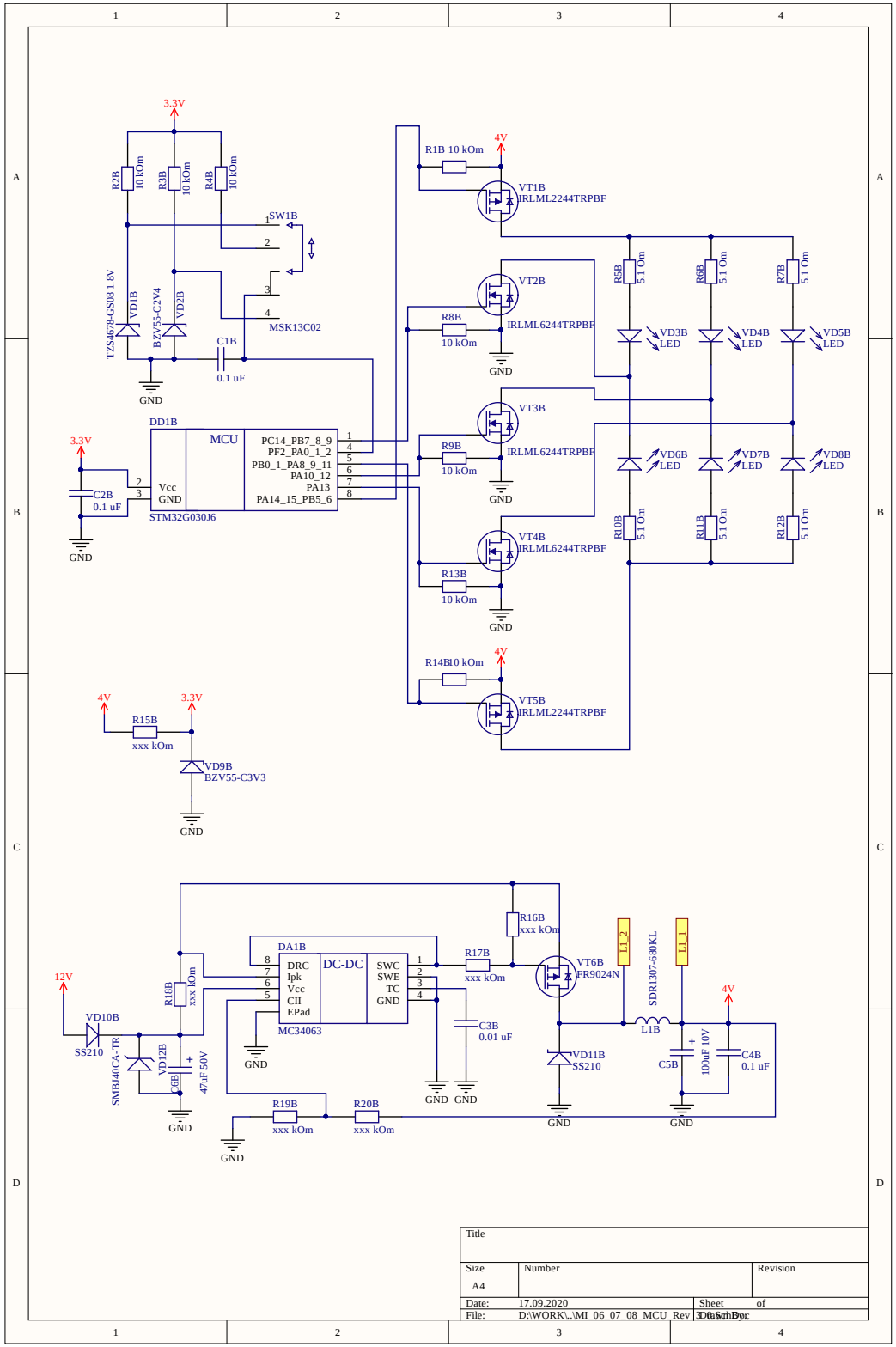

Title		
Size A4	Number	Revision
Date: 17.09.2020	Sheet of	
File: D:\WORK\..\MI_06_07_08_MCU_Rev_3.0.SchDoc	Drawn By:	