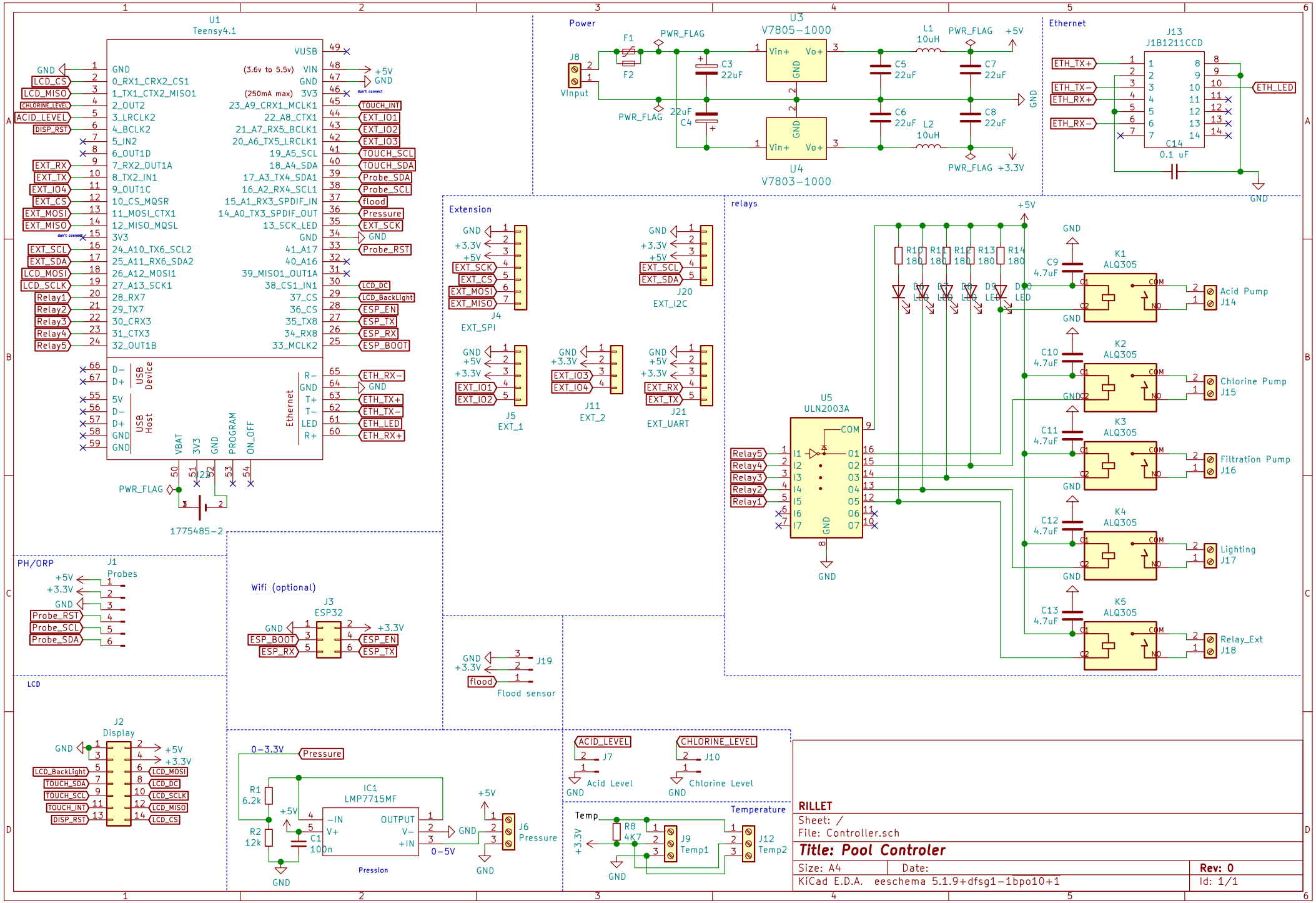
U1
Teensy4.1
Power
U3
V7805-1000
U4
V7803-1000
Ethernet
J13
J1B1211CCD
Extension
J4
EXT_SPI
J20
EXT_I2C
J5
EXT_1
J11
EXT_2
J21
EXT_UART
relays
U5
ULN2003A
K1
ALQ305
K2
ALQ305
K3
ALQ305
K4
ALQ305
K5
ALQ305
Acid Pump
J14
Chlorine Pump
J15
Filtration Pump
J16
Lighting
J17
Relay_Ext
J18
PH/ORP
J1
Probes
Wifi (optional)
J3
ESP32
J19
Flood sensor
LCD
J2
Display
IC1
LMP7715MF
Pression
J6
Pressure
ACID_LEVEL
J7
Acid Level
CHLORINE_LEVEL
J10
Chlorine Level
Temperature
J9
Temp1
J12
Temp2
RILLET
Sheet: /
File: Controller.sch
Title: Pool Controler
Size: A4
Date:
Rev: 0
KiCad E.D.A. eeschema 5.1.9+dfsg1-1bpo10+1
Id: 1/1