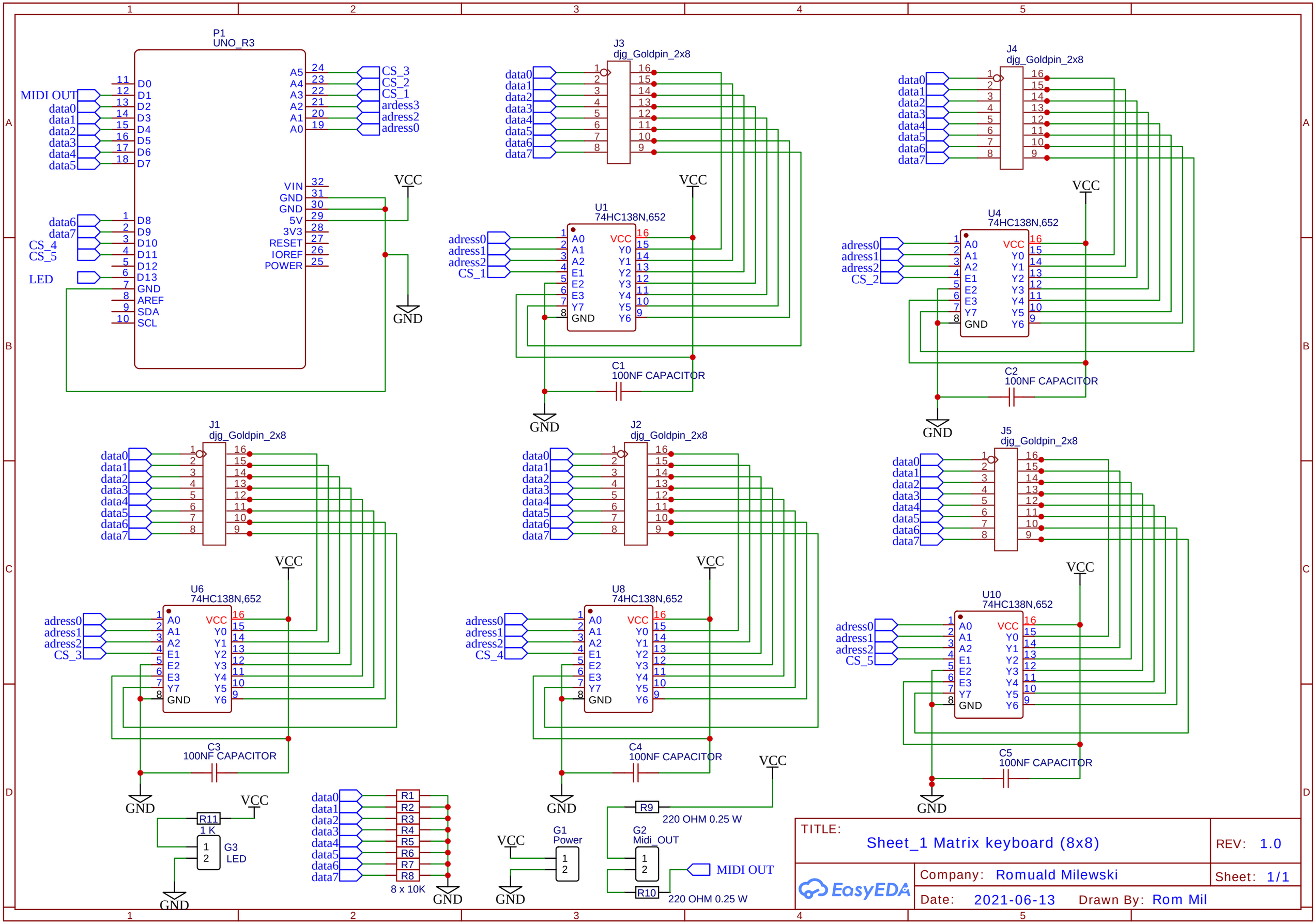
P1
UNO_R3
MIDI OUT
data0
data1
data2
data3
data4
data5
data6
data7
CS_4
CS_5
LED
D0
D1
D2
D3
D4
D5
D6
D7
D8
D9
D10
D11
D12
D13
GND
AREF
SDA
SCL
A5
A4
A3
A2
A1
A0
CS_3
CS_2
CS_1
ardess3
adress2
adress0
VIN
GND
GND
5V
3V3
RESET
IOREF
POWER
VCC
GND
J3
djg_Goldpin_2x8
U1
74HC138N,652
adress0
adress1
adress2
CS_1
A0
A1
A2
E1
E2
E3
Y7
GND
VCC
Y0
Y1
Y2
Y3
Y4
Y5
Y6
C1
100NF CAPACITOR
J4
djg_Goldpin_2x8
U4
74HC138N,652
adress0
adress1
adress2
CS_2
C2
100NF CAPACITOR
J1
djg_Goldpin_2x8
U6
74HC138N,652
adress0
adress1
adress2
CS_3
C3
100NF CAPACITOR
J2
djg_Goldpin_2x8
U8
74HC138N,652
adress0
adress1
adress2
CS_4
C4
100NF CAPACITOR
J5
djg_Goldpin_2x8
U10
74HC138N,652
adress0
adress1
adress2
CS_5
C5
100NF CAPACITOR
R11
1 K
G3
LED
R1
R2
R3
R4
R5
R6
R7
R8
8 x 10K
G1
Power
R9
220 OHM 0.25 W
G2
Midi_OUT
R10
220 OHM 0.25 W
MIDI OUT
TITLE:
Sheet_1 Matrix keyboard (8x8)
REV: 1.0
Company: Romuald Milewski
Sheet: 1/1
Date: 2021-06-13
Drawn By: Rom Mil
EasyEDA