Railway Transport Database System(RTDS)

Dhirubhai Ambani University

Group Members Details:-

1) Ronak Vataliya – 202401241
2) Tolani Dhaval – 202401228
3) Taksh Chauhan – 202401223
4) Rushil Sureja – 202401218

Entity-Relationship Diagram:-

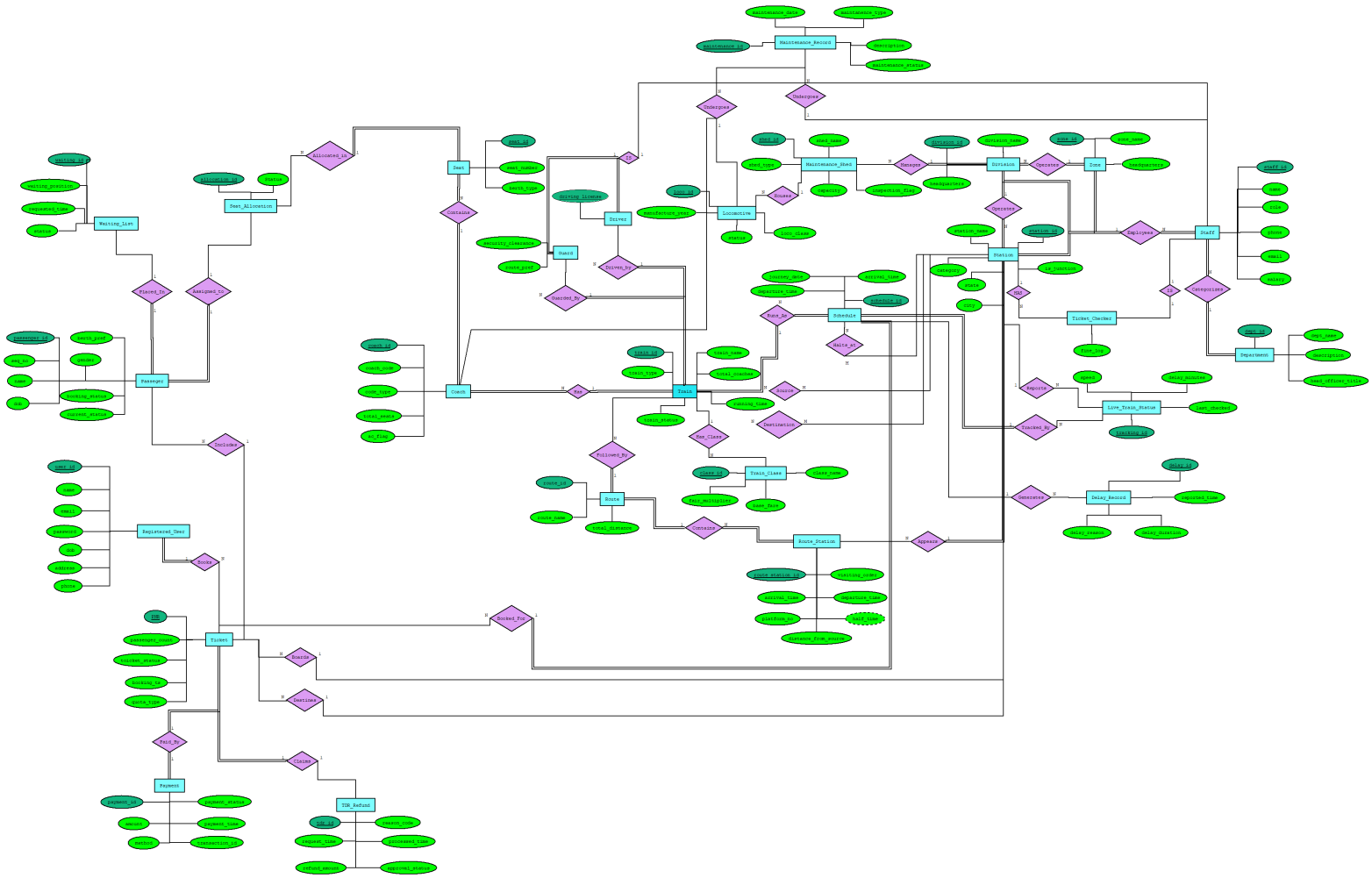

*To clearly look through ERD refer to GDrive link:- https://drive.google.com/drive/folders/14wY6PbwPIED8g2VgfyF5OgwbxrFgQp4r?usp=sharing