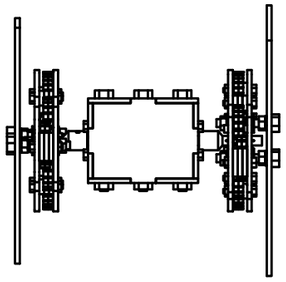

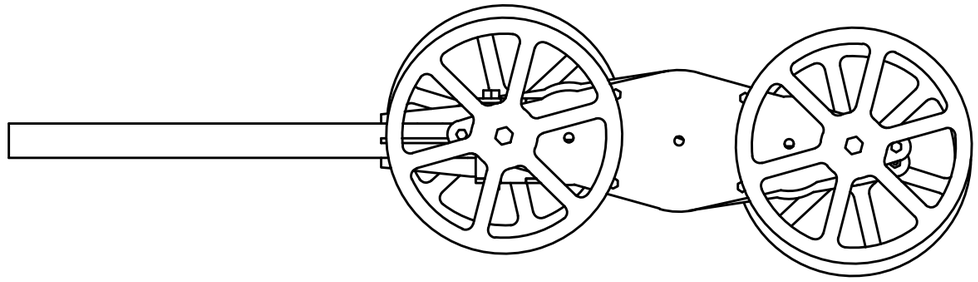

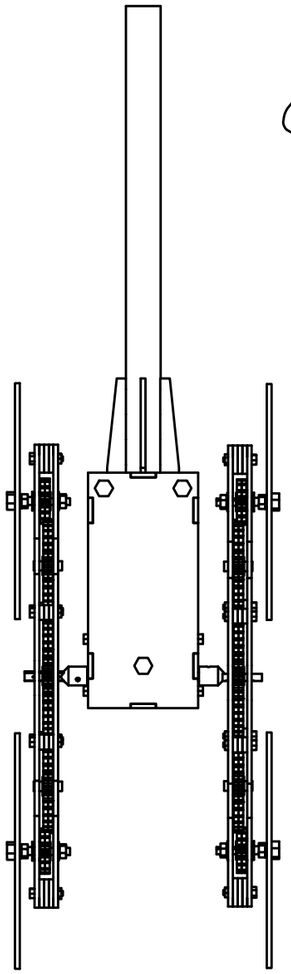

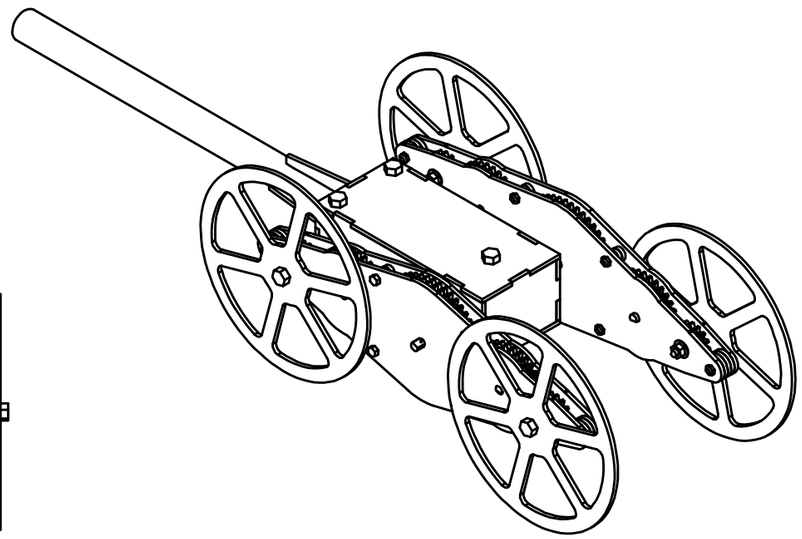

Parts List				
26	Standoff-thick	12	ACRYLIC	
25	Standoff-thin	24	ACRYLIC	
24	Frame	4	ACRYLIC	
23	m3 bolt long	12		
22	M3-nut	12		
21	JGY-370Gearbox	2		
20	front plate	1	MDF	
19	Back Plate	1	MDF	
18	M5-nut-4mm	3		
17	m3 bolt	8		
16	m5-bolt-long	3		
15	side plate	2	MDF	
14	JGY-37012V DC Motor	2		
13	bottom plate	2	MDF	
12	Wheel	4	MDF	
11	M5 BOLT FLATTENED	4	STEEL	M002
10	Spur Gear22	8	ACRYLIC	
9	5m hex nut	12		
8	tail fin	4	MDF	
7	Tail	1		
6	6mm D SHAFT	4	STEEL	M001
5	Idler Gear	8	ACRYLIC	
4	JGY-370Output Shaft	2		
3	Sun gear	4	ACRYLIC	
2	SHAFT EXTENSION	2	STEEL	M003
1	M5-washer	28		
ITEM	**DESCRIPTION**	**Qty.**	**MATERIAL**	**Nr.**

STELLENBOSCH UNIVERSITY

SCALE ON A3 1:4
UNITS IN mm
TITLE: STAIR CLIMBER

STUDENT Nr. 22961305 | **DRAWN BY** RG WELLS | **CHECKED** | **DATE** 2023-07-30 | **SHEET Nr.** **OF** **SHEETS** | **Nr.** A001