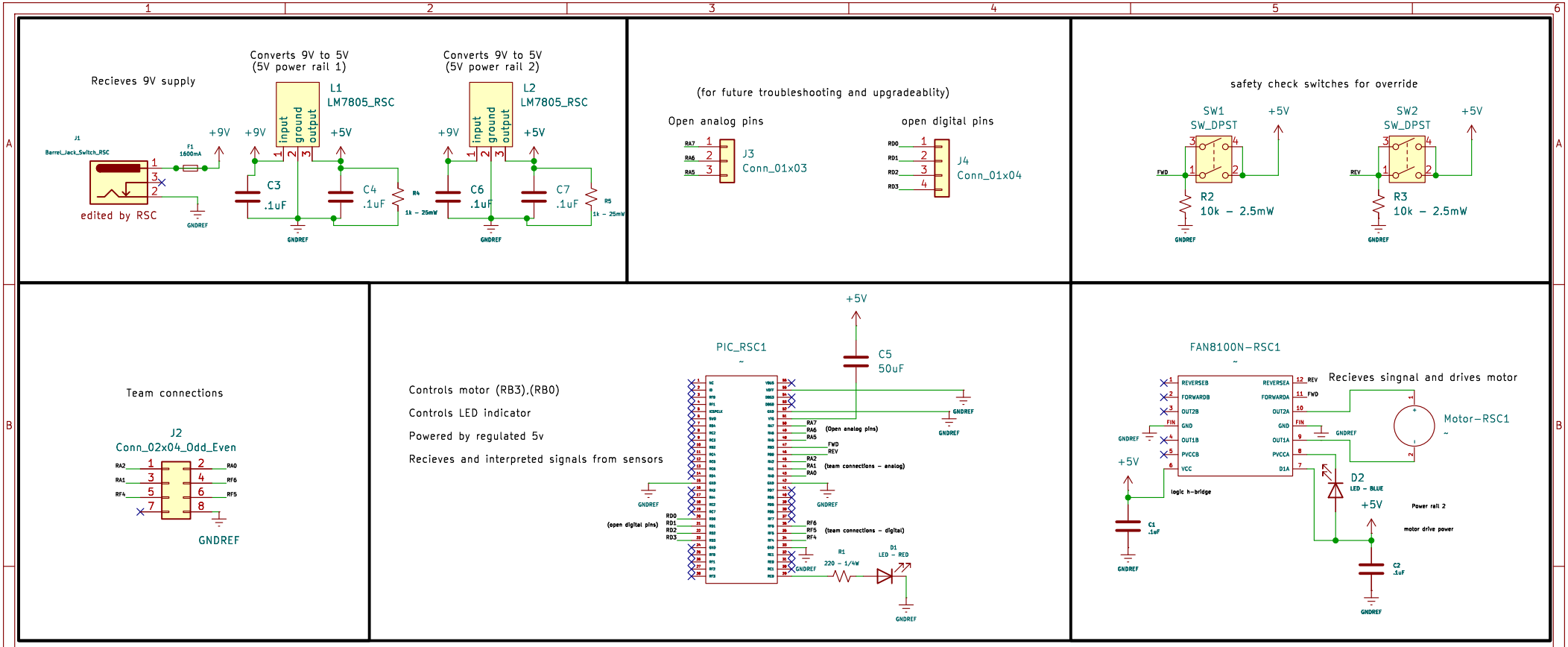

Sheet: /
File: Subsystem-schematic-design-RSC-.kicad_sch

Title:

Size: A4	Date:	**Rev:**
KiCad E.D.A. 9.0.4		Id: 1/1