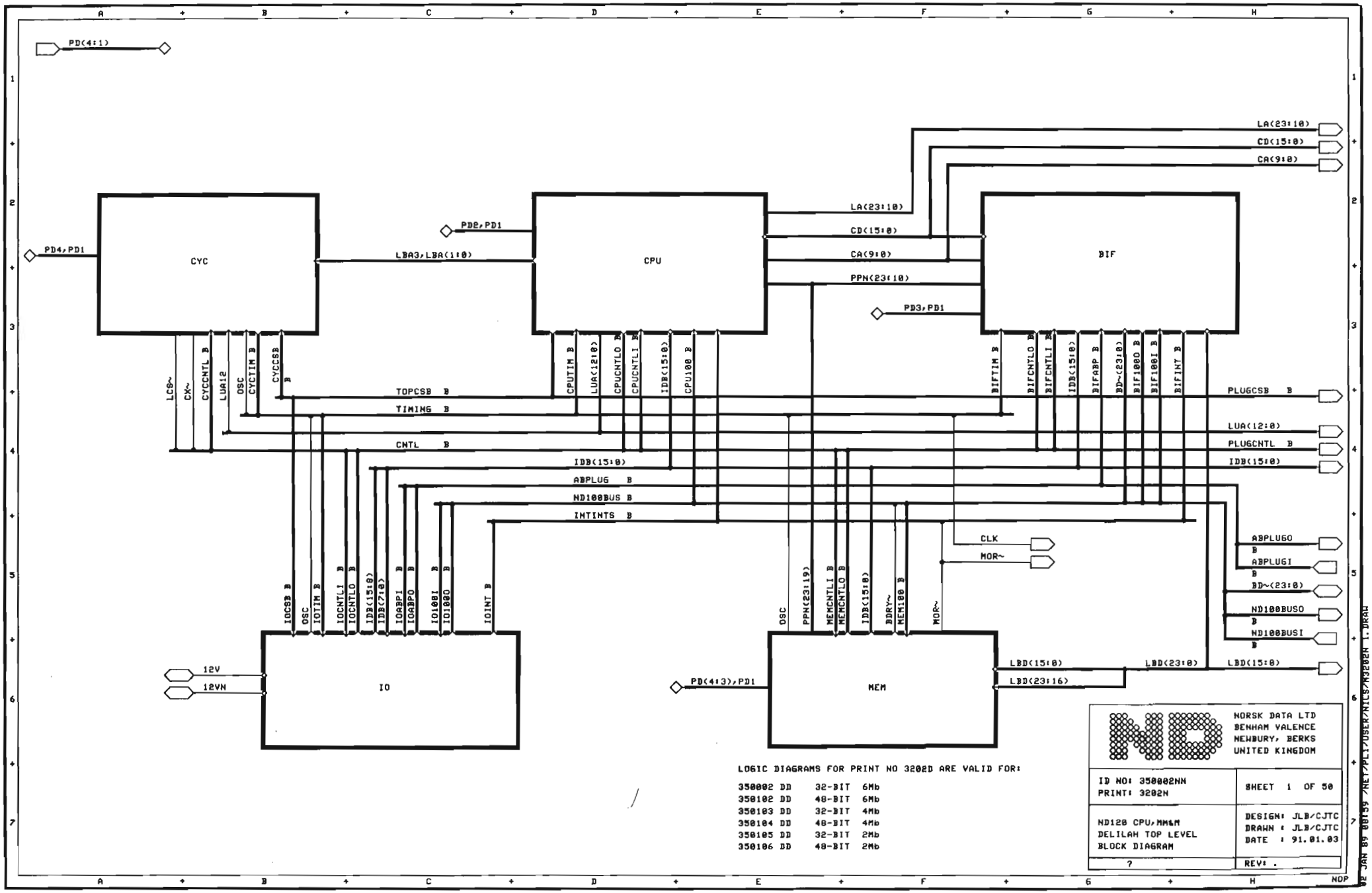

L06IC DIAGRAMS FOR PRINT NO 3202D ARE VALID FOR:

350002 DD	32-BIT	6Mb
350102 DD	48-BIT	6Mb
350103 DD	32-BIT	4Mb
350104 DD	48-BIT	4Mb
350105 DD	32-BIT	2Mb
350106 DD	48-BIT	2Mb

Scanned by Jonny Oddene for Sintran Data © 2024

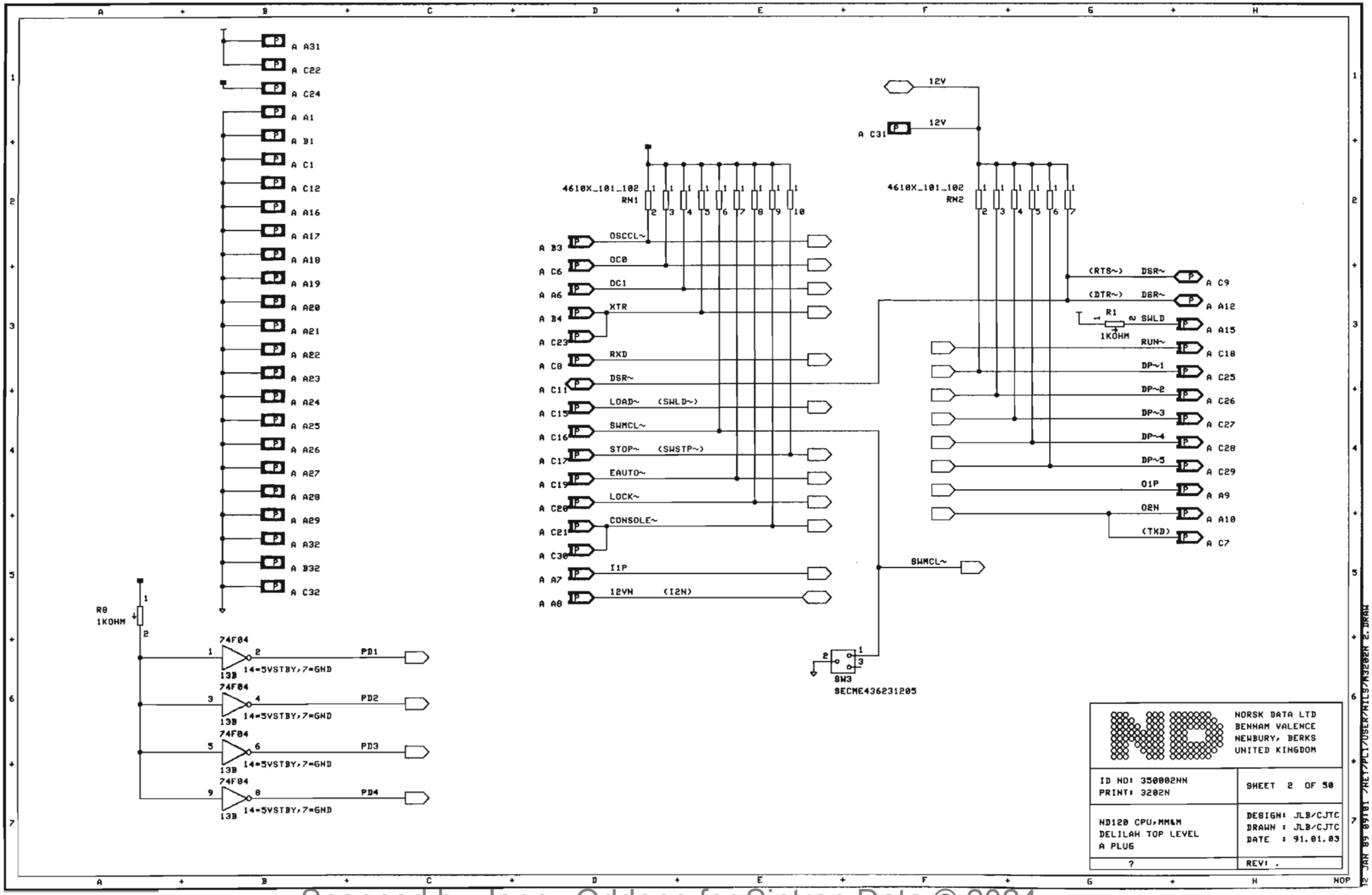

Scanned by Jonny Oddene for Sintran Data © 2024

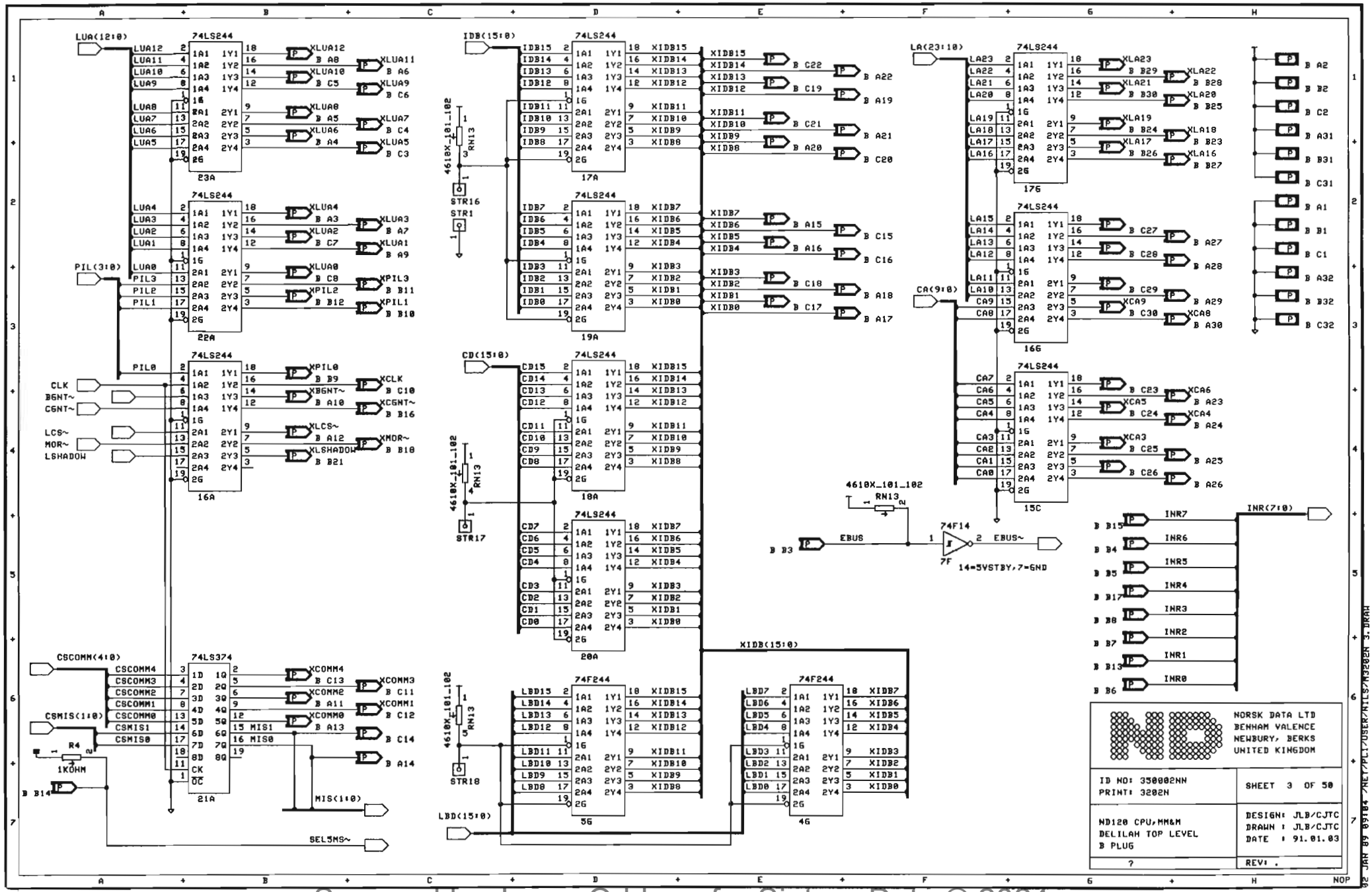

Scanned by Jonny Oddene for Sintran Data © 2024

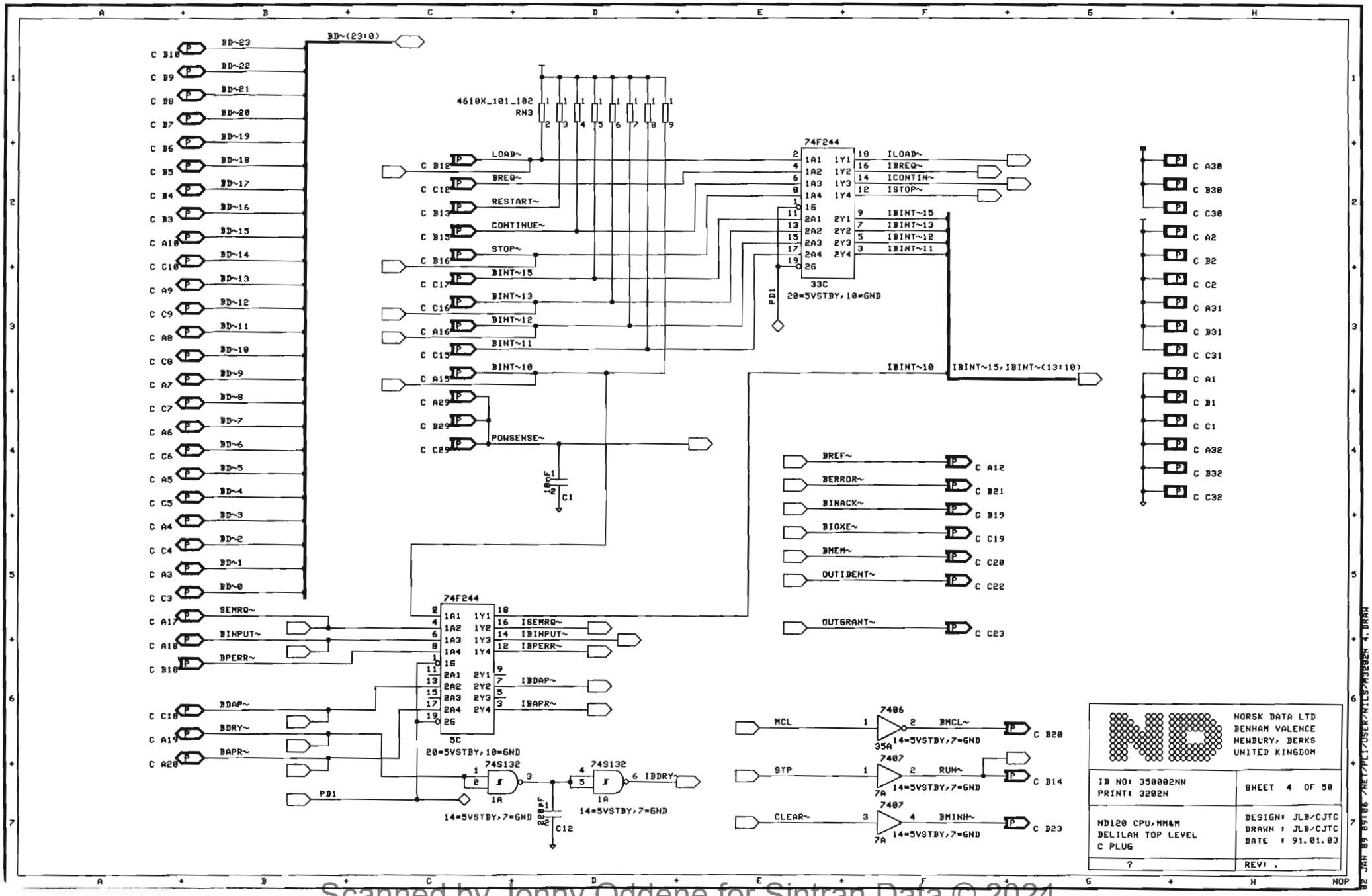

Scanned by Jonny Oddene for Sintran Data © 2024

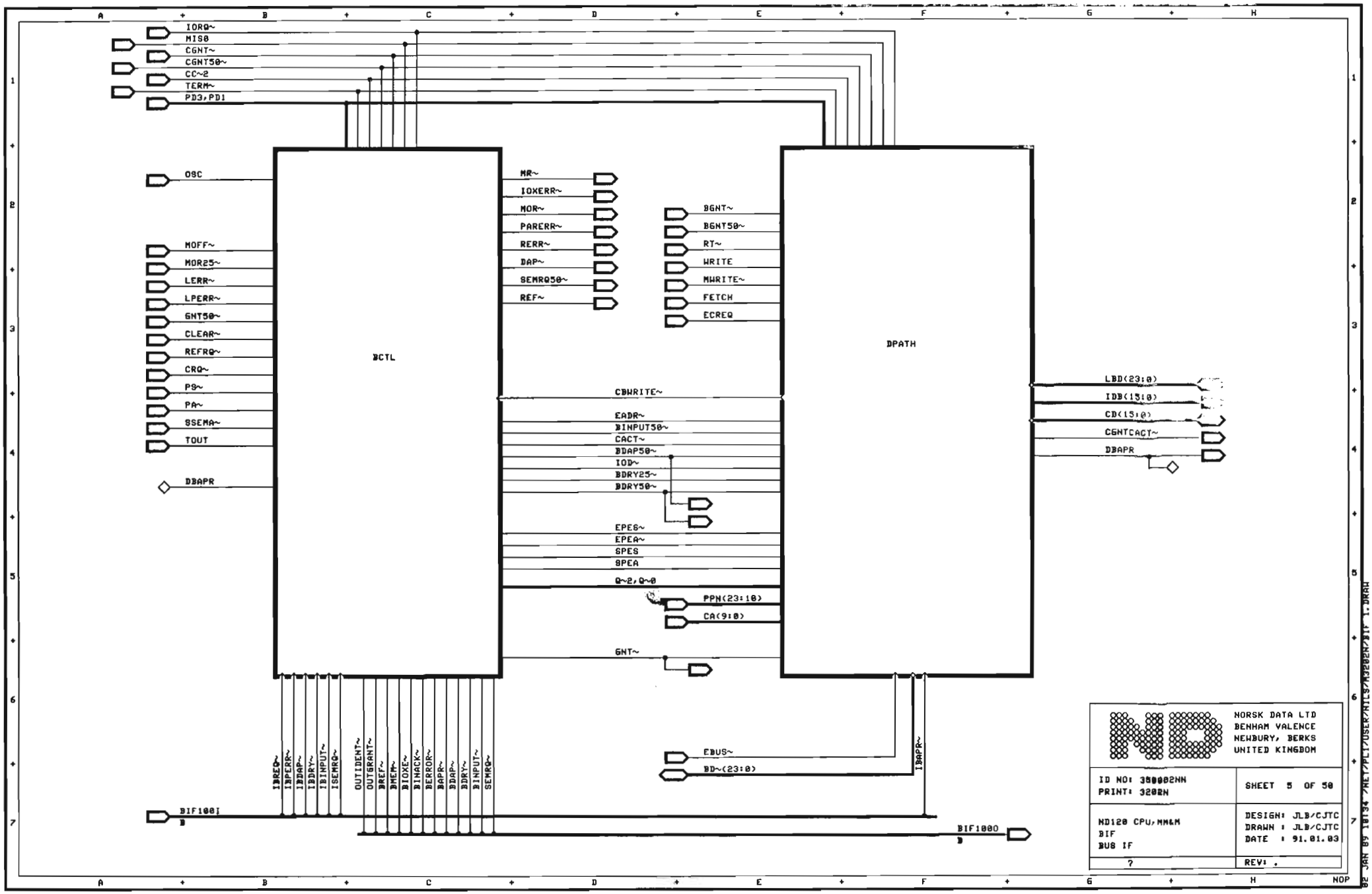

Scanned by Jonny Oddene for Sintran Data © 2024

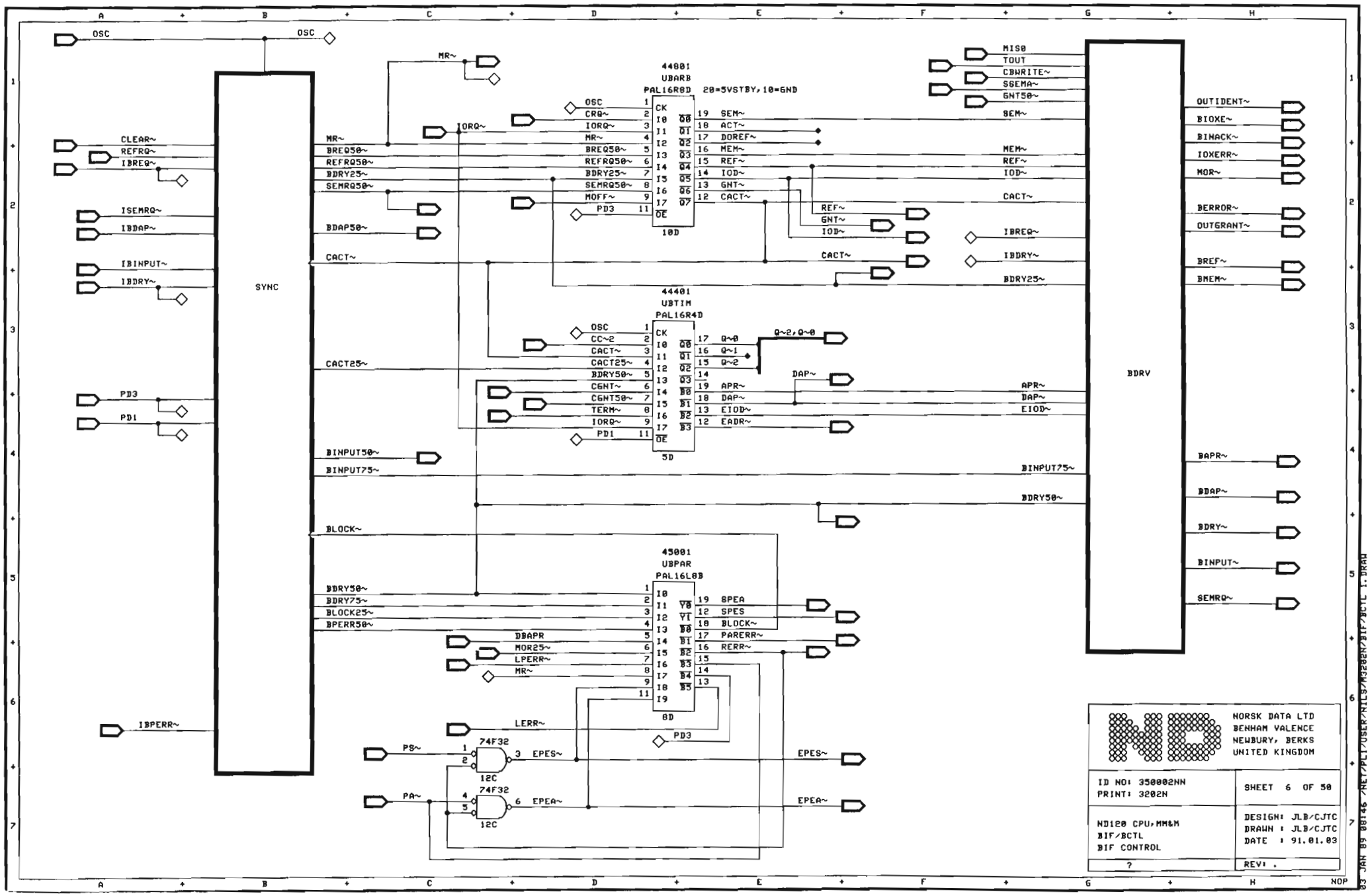

NORSK DATA LTD
BENHAM VALENCE
NEWBURY, BERKS
UNITED KINGDOM

ID NO: 350002NN PRINT: 3202N	SHEET 6 OF 50
ND120 CPU,MM&M BIF/BCTL BIF CONTROL	DESIGN: JLB/CJTC DRAWN : JLB/CJTC DATE : 91.01.03
?	REV: .

Scanned by Jonny Oddene for Sintran Data © 2024

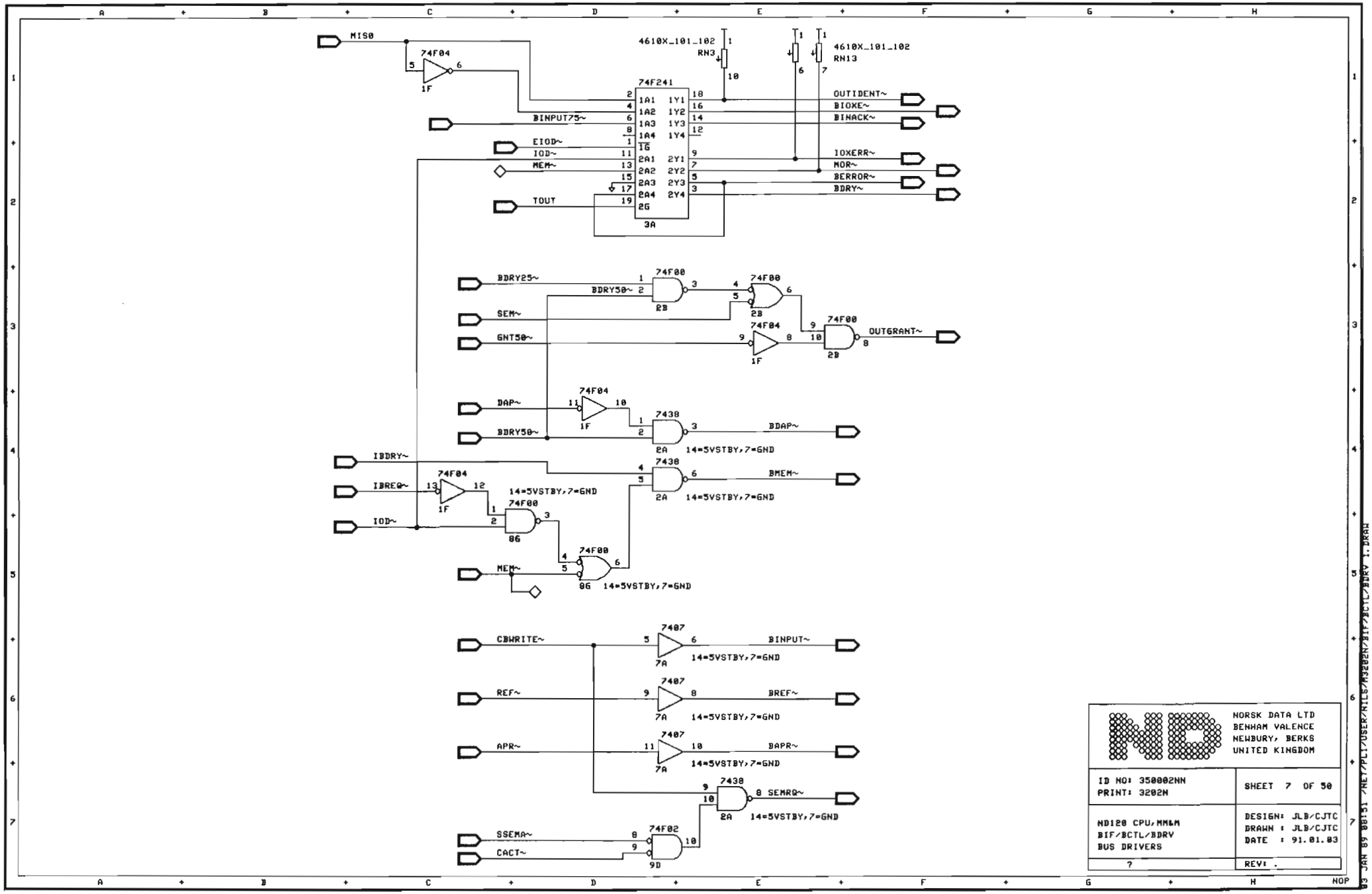

Scanned by Jonny Oddene for Sintran Data © 2024

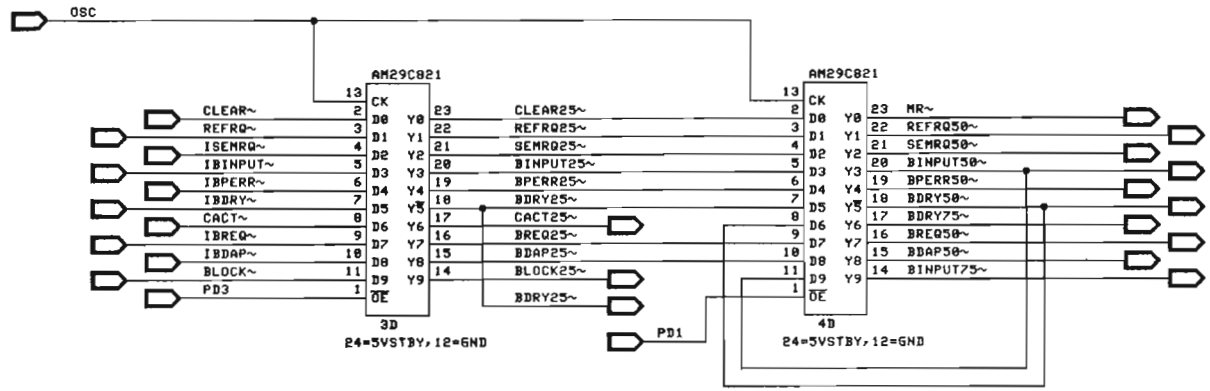

NORSK DATA LTD
BENHAM VALENCE
NEWBURY, BERKS
UNITED KINGDOM

ID NO: 350002NN PRINT: 3202N	SHEET 8 OF 50
ND120 CPU,MM&M BIF/BCTL/SYNC BIF SYNC	DESIGN: JLB/CJTC DRAWN : JLB/CJTC DATE : 91.01.03
?	REV: .

Scanned by Jonny Oddene for Sintran Data © 2024

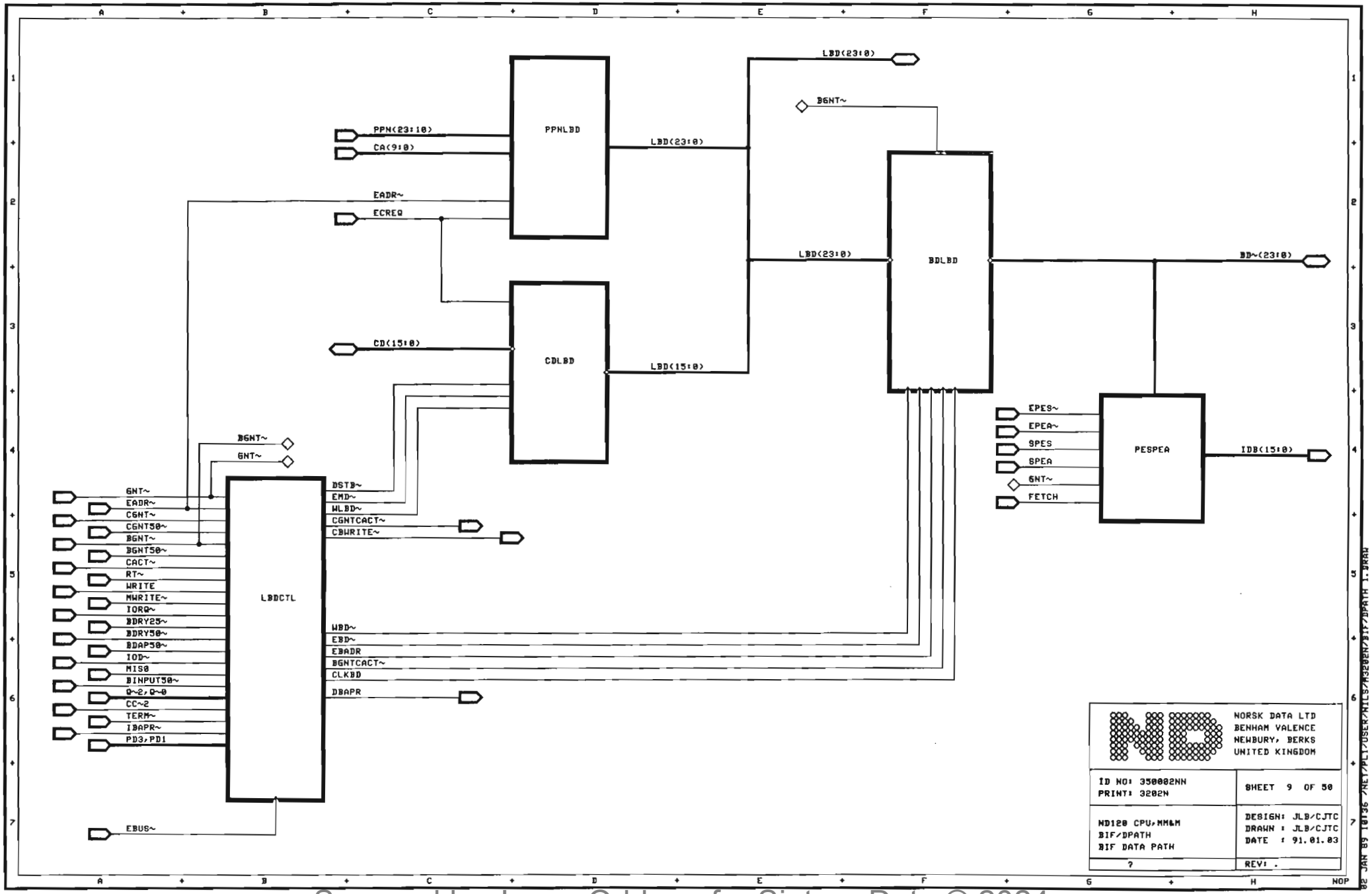

Scanned by Jonny Oddene for Sintran Data © 2024

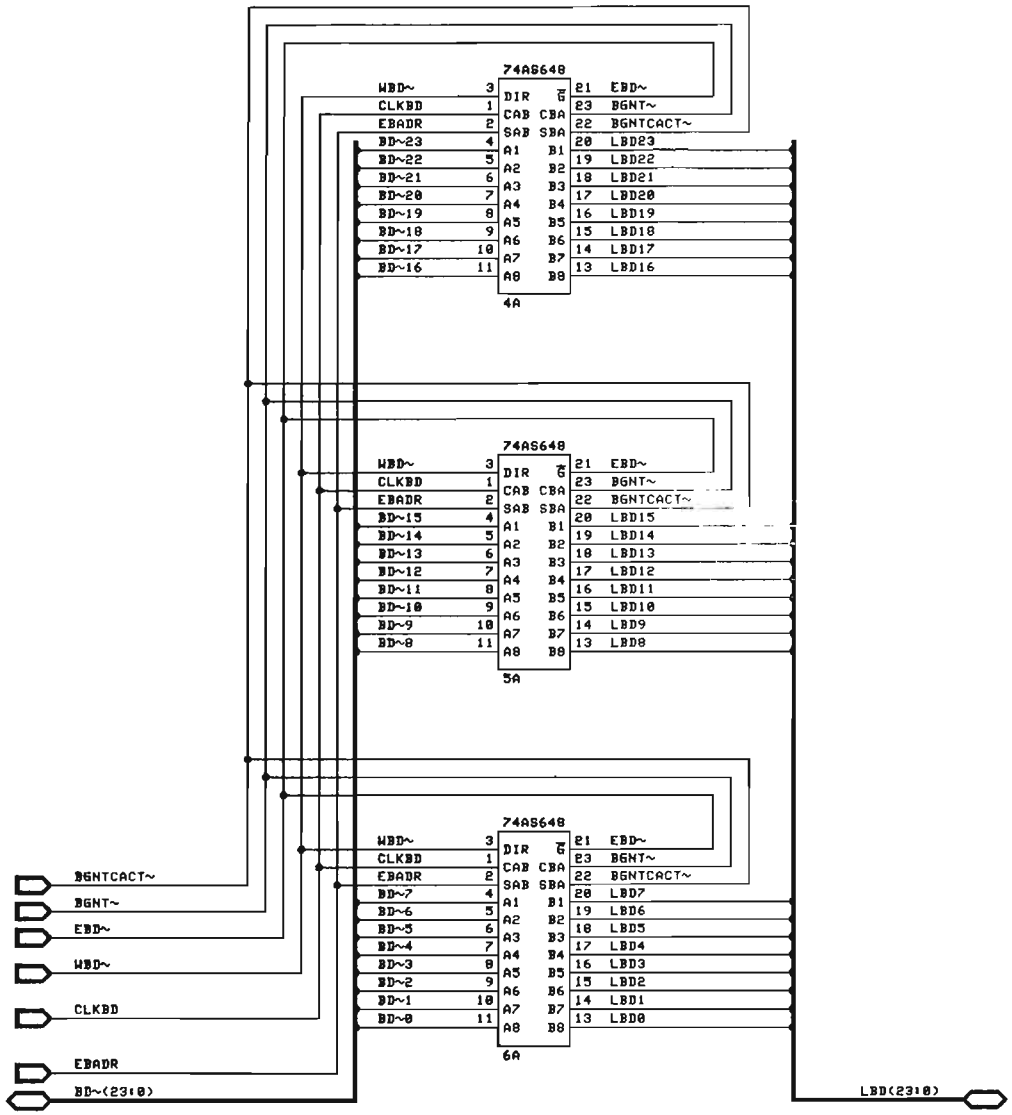

NORSK DATA LTD
BENHAM VALENCE
NEWBURY, BERKS
UNITED KINGDOM

ID NO: 350002NN PRINT: 3202N	SHEET 10 OF 50
ND120 CPU, MM&M BIF/DPATH/BDLBD BIF BD TO LBD	DESIGN: JLB/CJTC DRAWN : JLB/CJTC DATE : 91.01.03
?	REV: .

12 JAN 89 10:47 /NET/PLT/USER/NILS/M3202N/BIF/DPATH/BDLBD 1.DRAW

Scanned by Jonny Oddene for Sintran Data © 2024

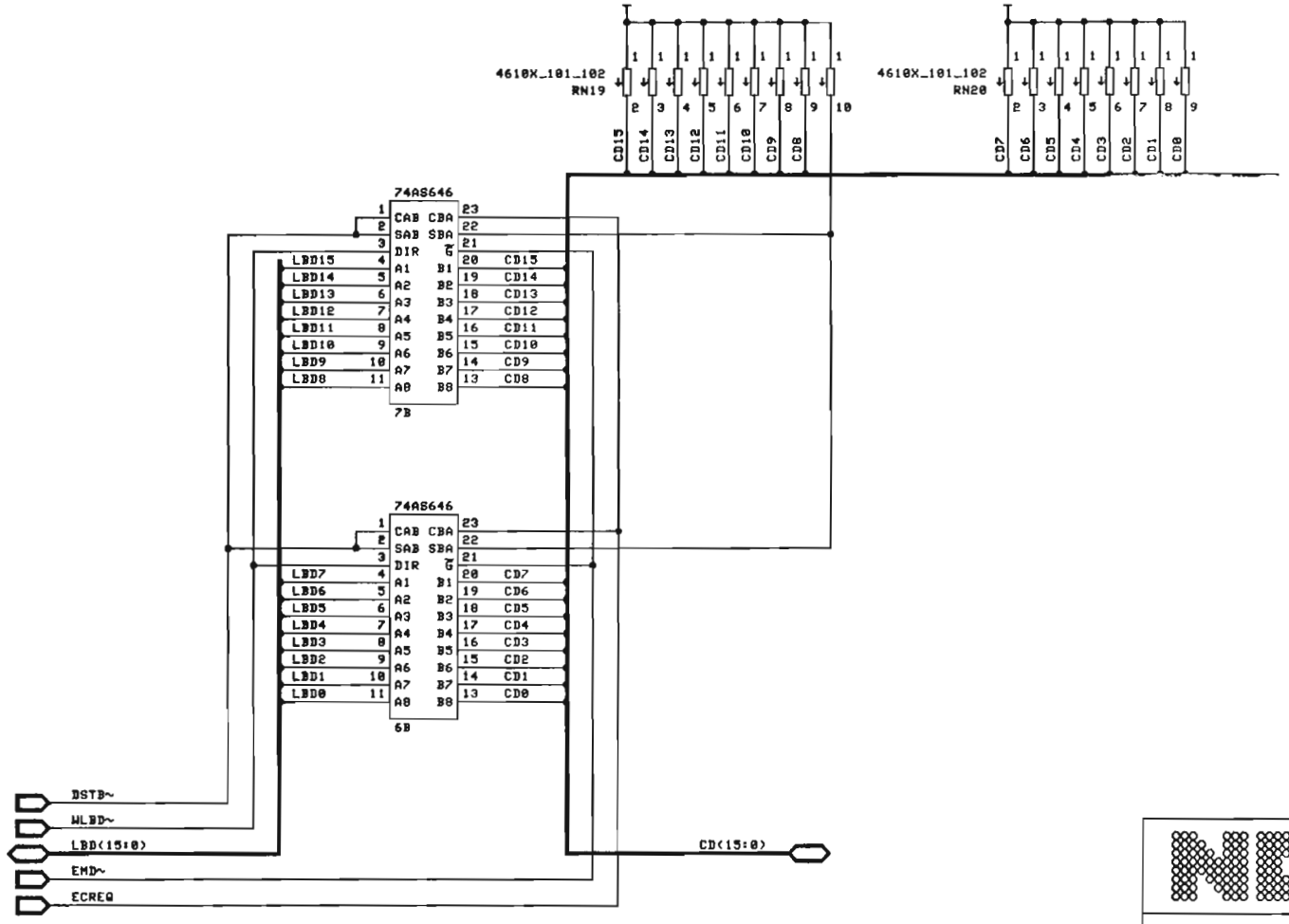

NORSK DATA LTD BENHAM VALENCE NEWBURY, BERKS UNITED KINGDOM	
ID NO: 350002NN PRINT: 3202N	SHEET 11 OF 58
ND120 CPU,MM&M BIF/DPATH/CDLBD BIF CD TO LBD	DESIGN: JLB/CJTC DRAWN : JLB/CJTC DATE : 91.01.03
?	REV: .

22-JAN-89 18:45 /NET/PLI/USER/NILS/M3202N/BIF/DPATH/CDLBD 1.DRAW

Scanned by Jonny Oddene for Sintran Data © 2024

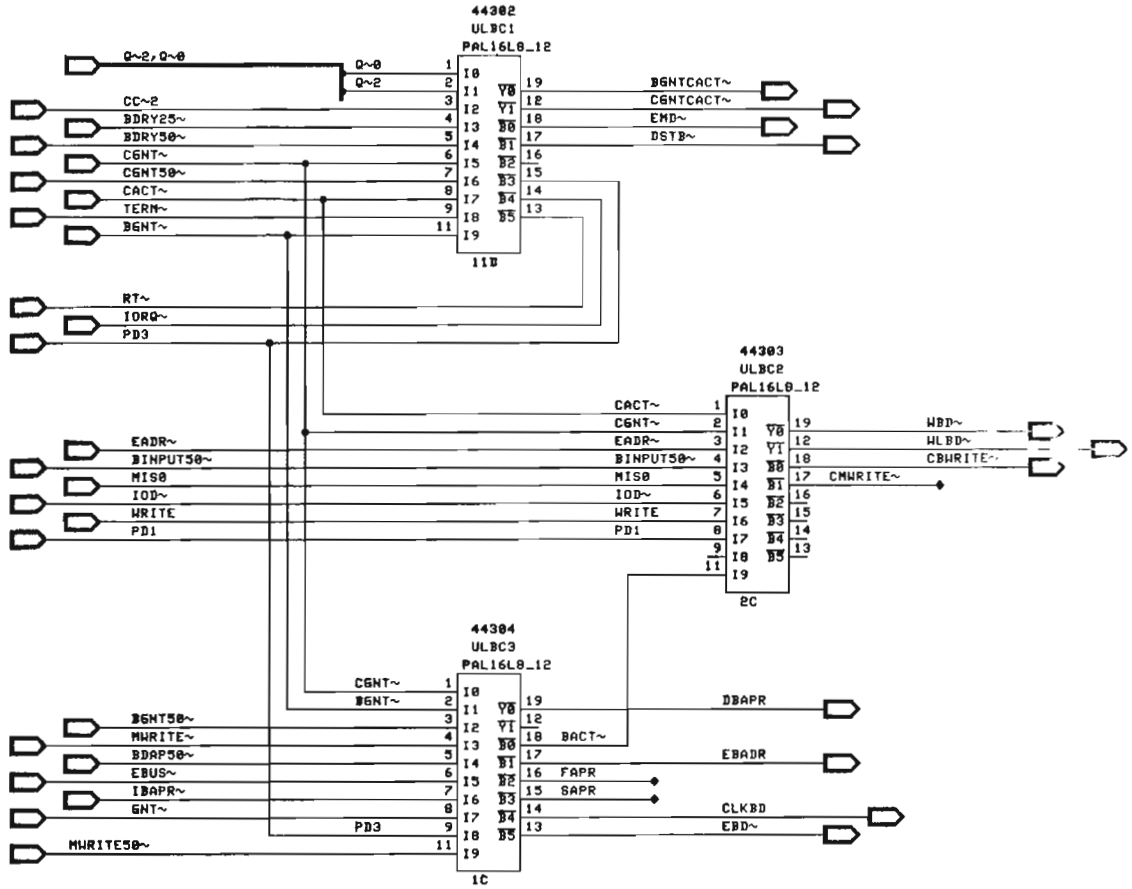

NORSK DATA LTD
BENHAM VALENCE
NEWBURY, BERKS
UNITED KINGDOM

ID NO: 350002NN PRINT: 3202N	SHEET 12 OF 50
ND120 CPU,MM&M BIF/DPATH/LBDCTL LBD CONTROL	DESIGN: JLB/CJTC DRAWN : JLB/CJTC DATE : 91.01.03
?	REV: .

02 JAN 89 18:43 /NET/PLI/USER/NTLS/N3202N/BIF/DPATH/LBDCTL 1.DRAW

Scanned by Jonny Oddene for Sintran Data © 2024

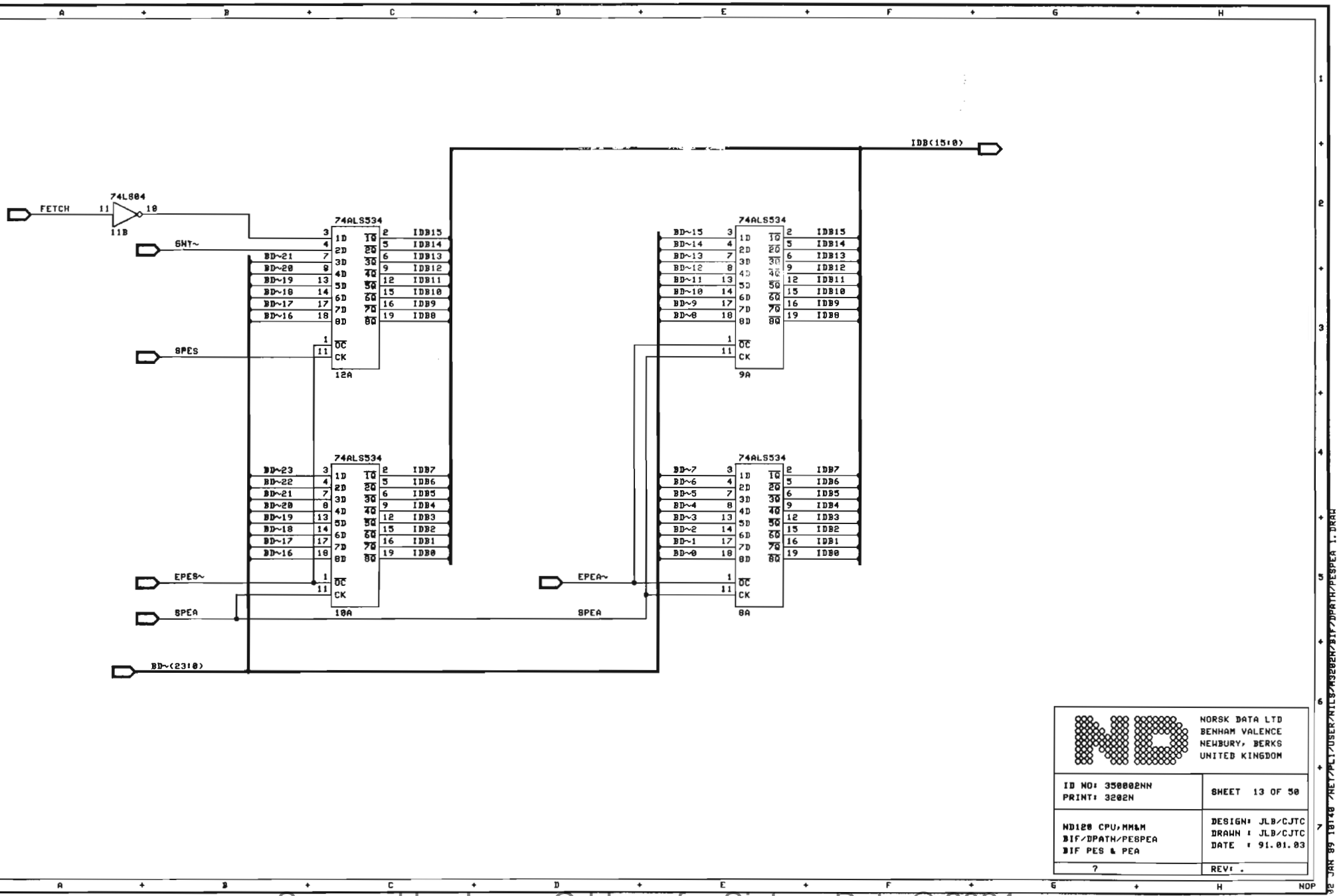

NORSK DATA LTD
BENHAM VALENCE
NEWBURY, BERKS
UNITED KINGDOM

ID NO: 350802NN PRINT: 3202N	SHEET 13 OF 50
ND120 CPU,MM&M BIF/DPATH/PESPEA BIF PES & PEA	DESIGN: JLB/CJTC DRAWN : JLB/CJTC DATE : 91.01.03
7	REV: .

02 JAN 89 10:48 /NET/PLT/USER/NILS/A3202N/BIF/DPATH/PESPEA 1.DRAW

Scanned by Jonny Oddene for Sintran Data © 2024

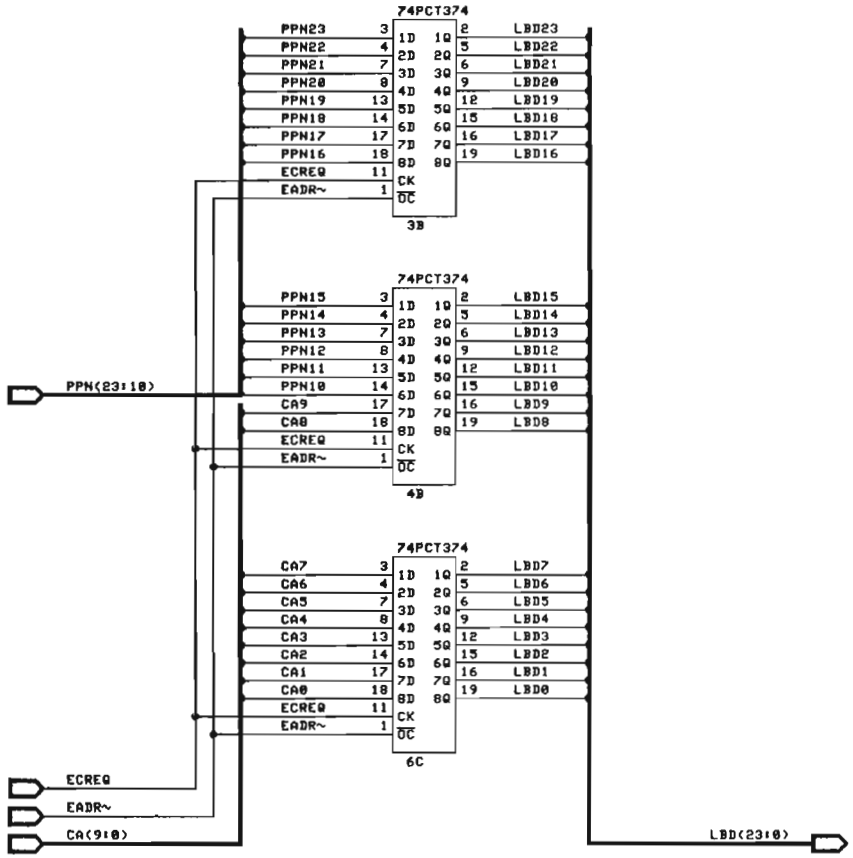

NORSK DATA LTD
BENHAM VALENCE
NEWBURY, BERKS
UNITED KINGDOM

ID NO: 350002NN PRINT: 3202N	SHEET 14 OF 50
ND120 CPU,MM&M BIF/DPATH/PPNLBD BIF PPN TO LBD	DESIGN: JLB/CJTC DRAWN : JLB/CJTC DATE : 91.01.03
?	REV: .

02 JAN 89 18:38 /NEI/PL1/USER/NILS/N3202N/BIF/DPATH/PPNLBD 1.DRAW

Scanned by Jonny Oddene for Sintran Data © 2024

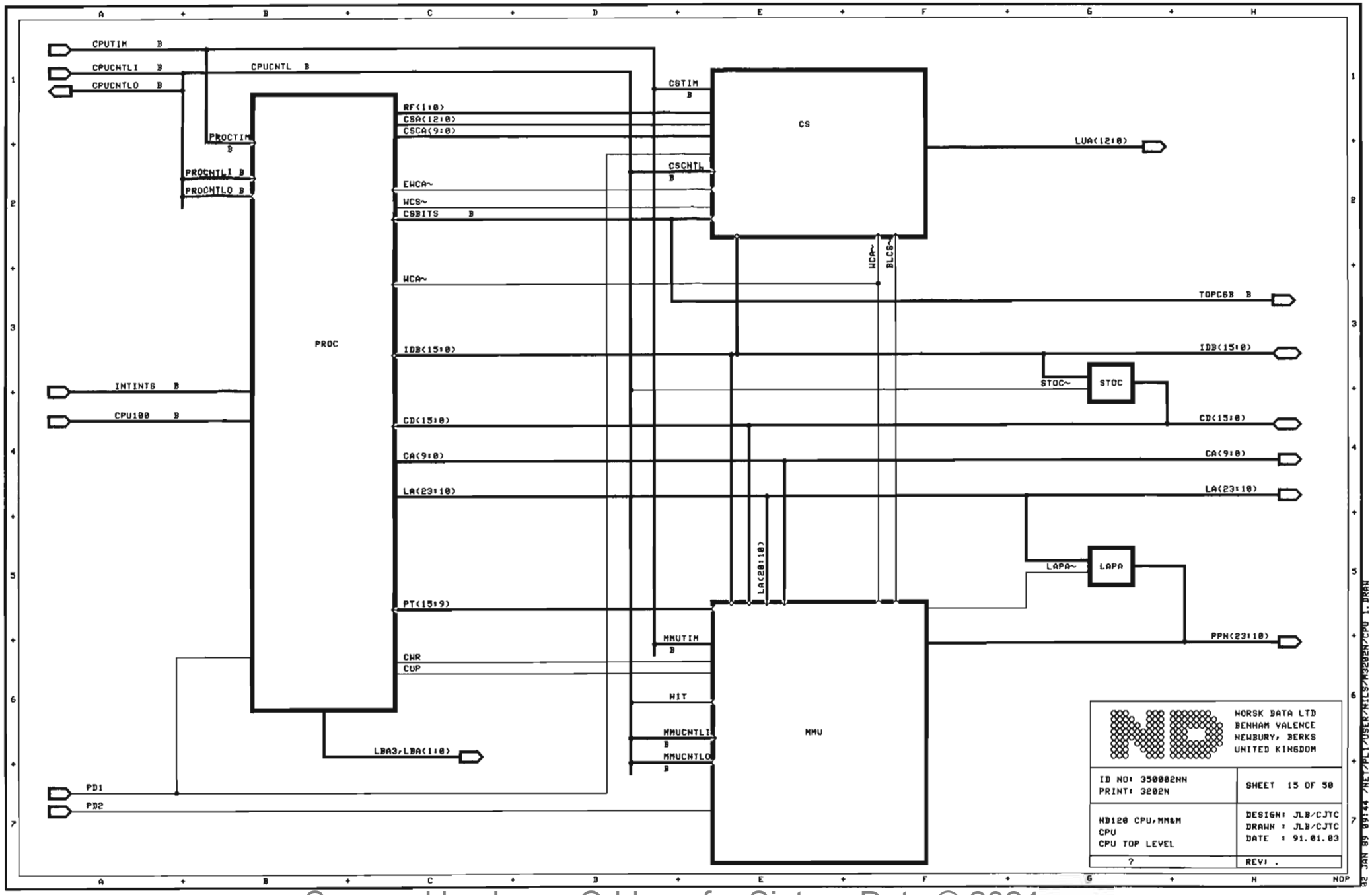

Scanned by Jonny Oddene for Sintran Data © 2024

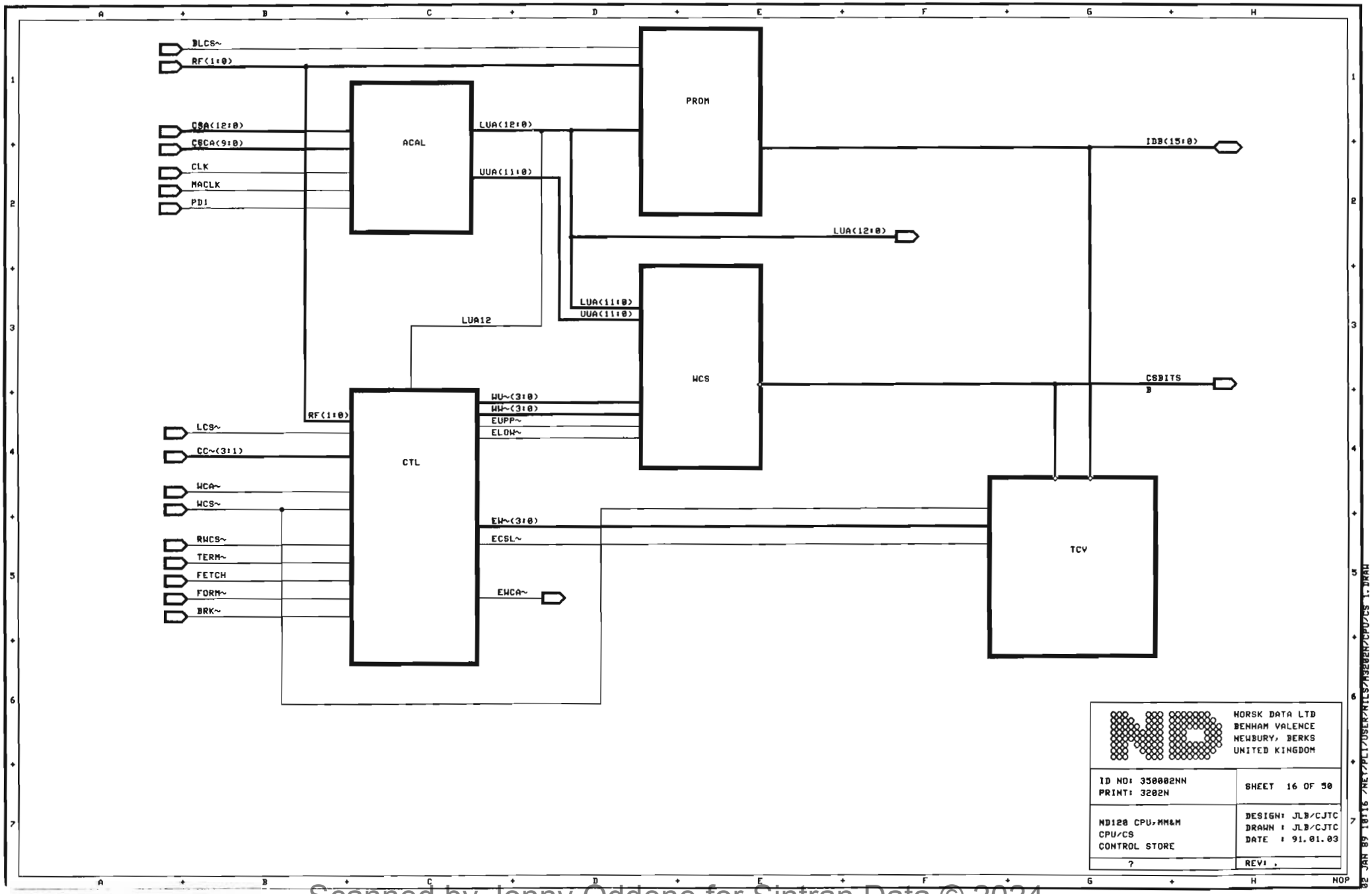

Scanned by Jonny Oddene for Sintran Data © 2024

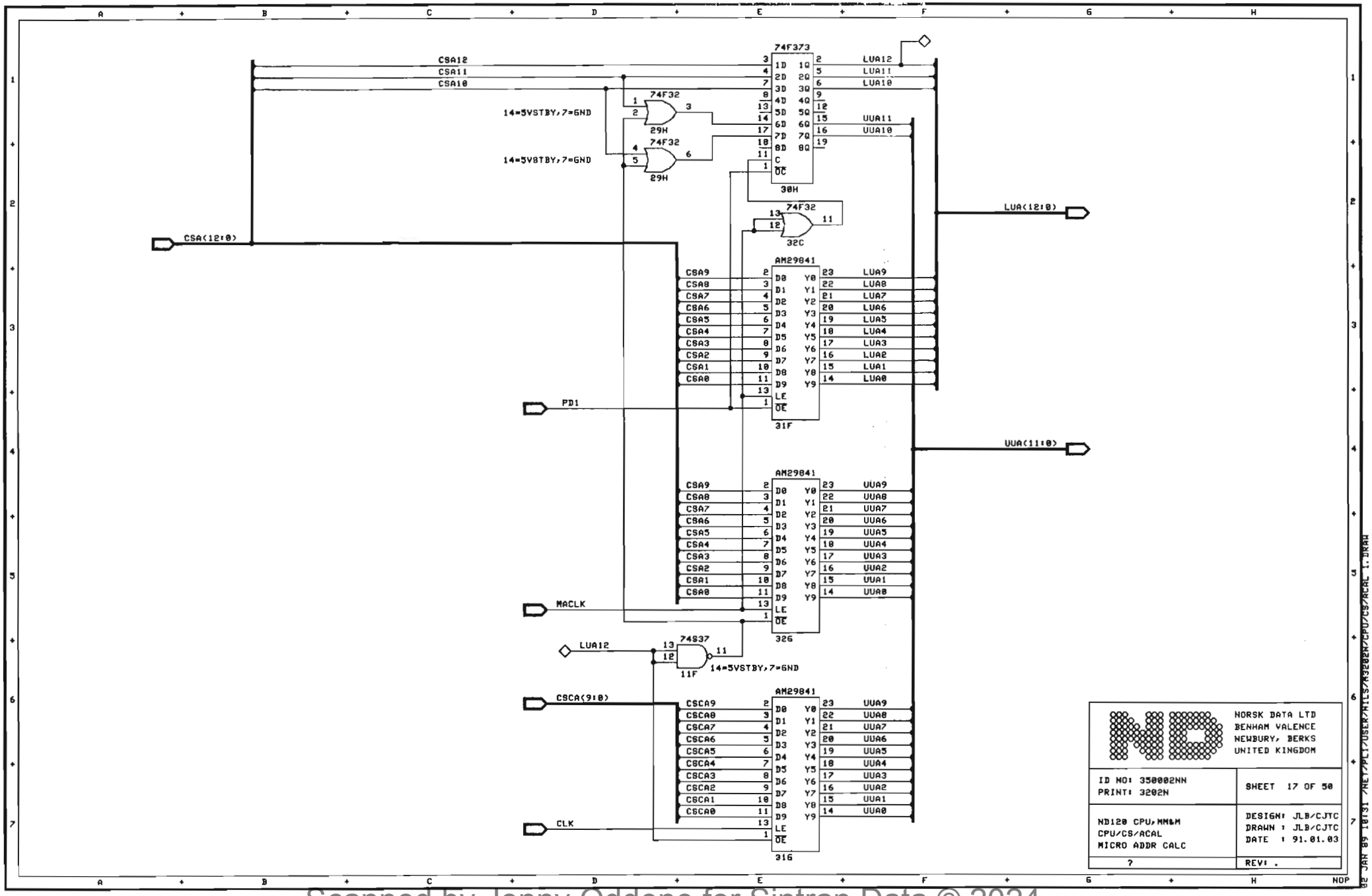

Scanned by Jonny Oddene for Sintran Data © 2024

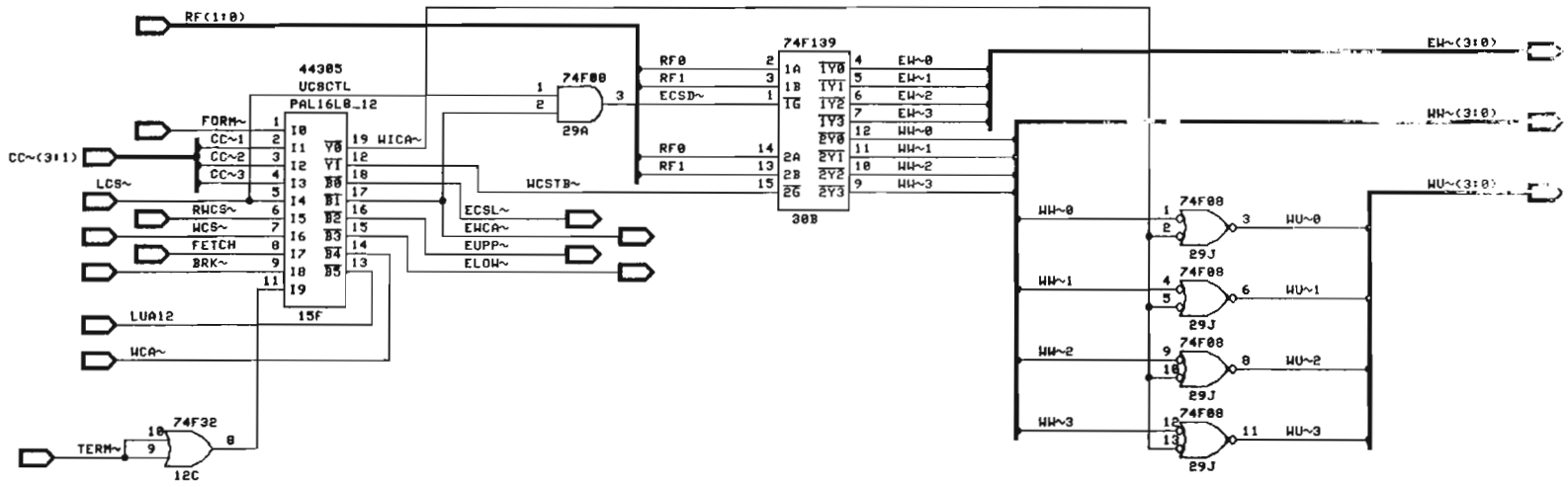

NORSK DATA LTD
BENHAM VALENCE
NEWBURY, BERKS
UNITED KINGDOM

ID NO: 350002NN PRINT: 3202N	SHEET 10 OF 50
ND120 CPU,MM&M CPU/CS/CTL CS CONTROL	DESIGN: JLB/CJTC DRAWN : JLB/CJTC DATE : 91.01.03
?	REV: .

02 JAN 89 10:29 /NET/PL1/USER/NILS/M3202N/CPU/CS/CTL 1.DRAW

Scanned by Jonny Oddene for Sintran Data © 2024

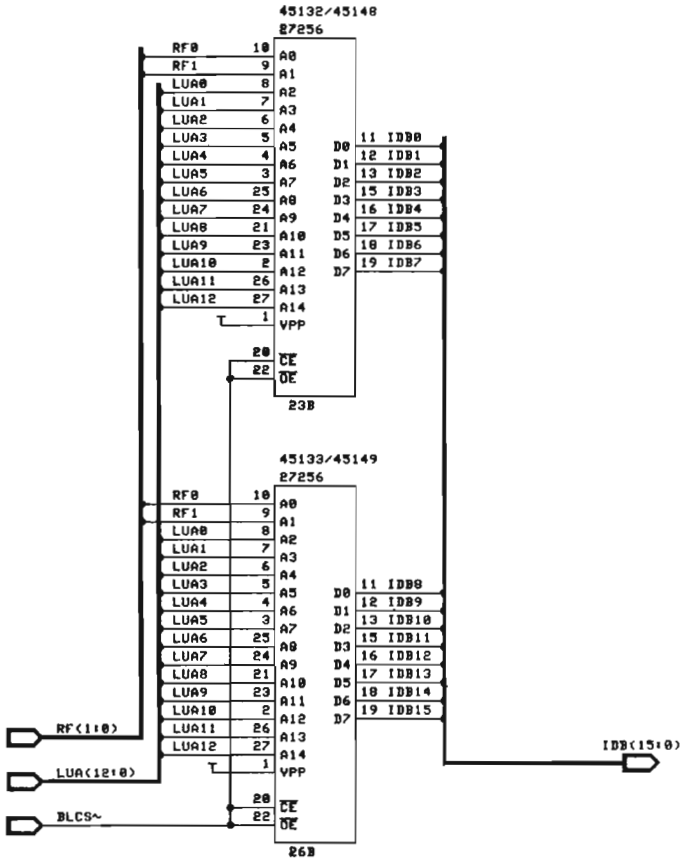

NORSK DATA LTD
BENHAM VALENCE
NEWBURY, BERKS
UNITED KINGDOM

ID NO: 350002NN PRINT: 3202N	SHEET 19 OF 50
ND120 CPU,MM&M CPU/CS/PROM CS PROMS	DESIGN: JLB/CJTC DRAWN : JLB/CJTC DATE : 91.01.03
7	REV: .

02 JAN 09 18:27 /NET/PL1/USER/NILS/ND120EN/CPU/CS/PROM 1.DRAW

Scanned by Jonny Oddene for Sintran Data © 2024

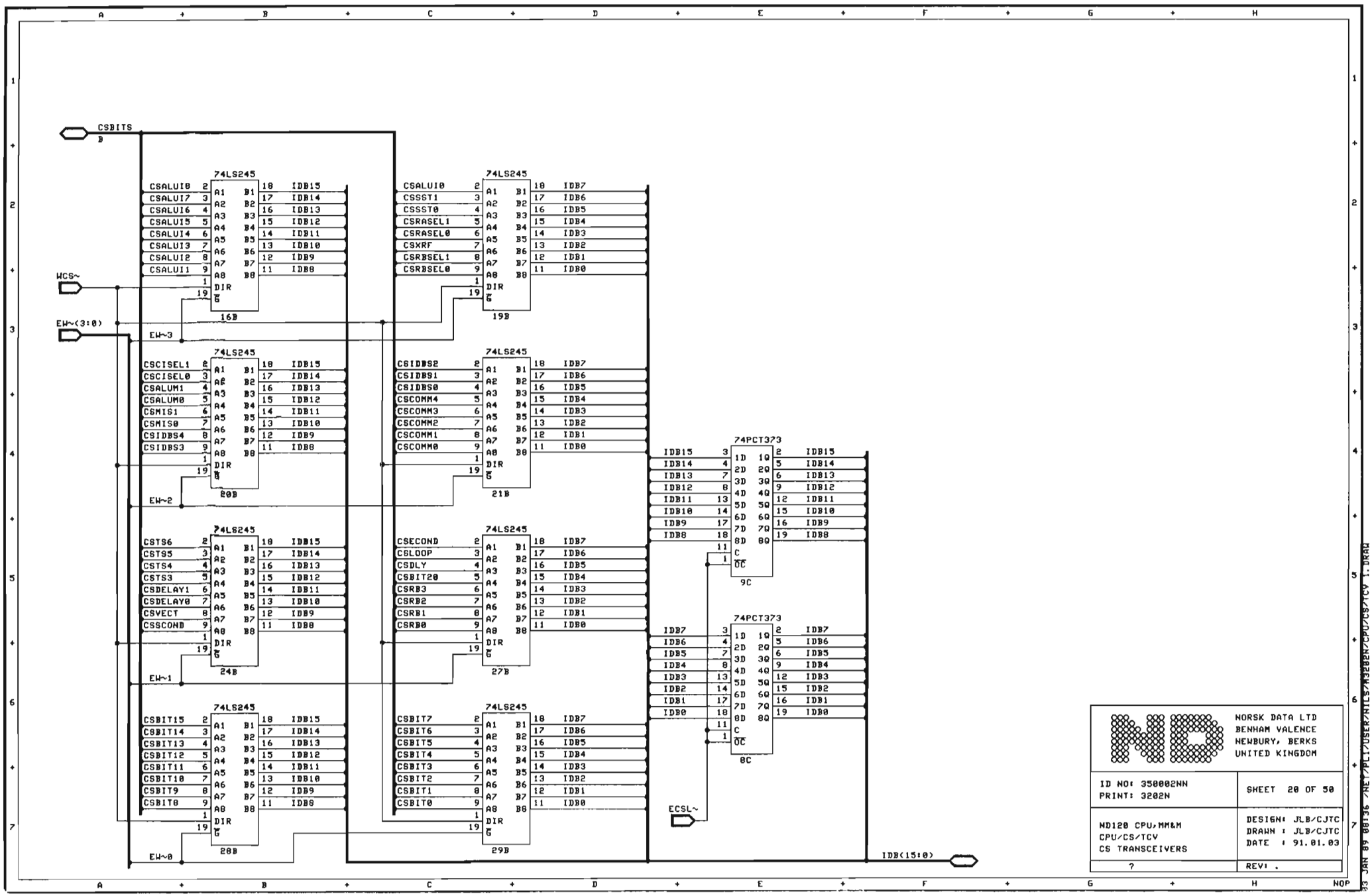

Scanned by Jonny Oddene for Sintran Data © 2024

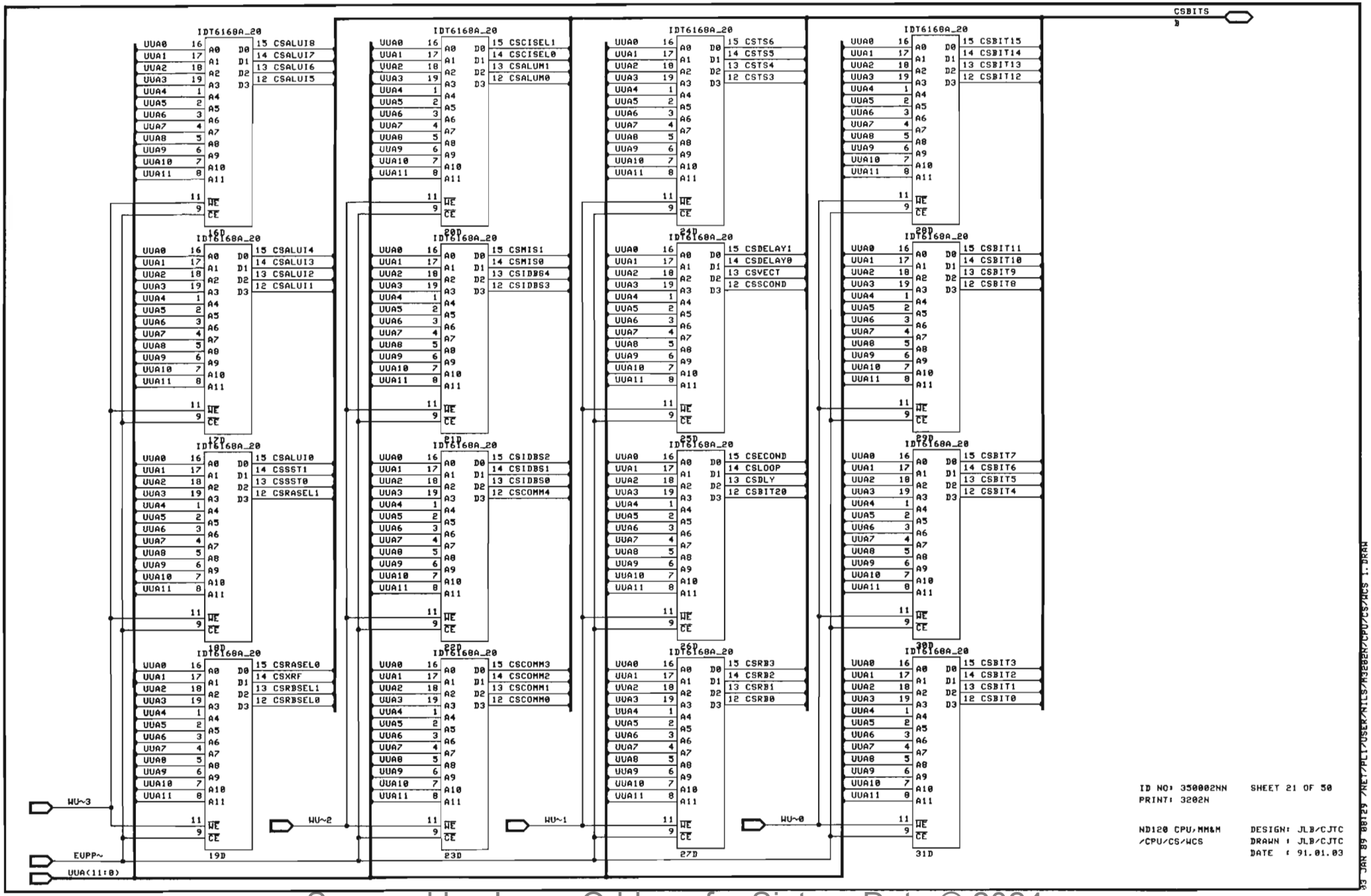

Scanned by Jonny Oddene for Sintran Data © 2024

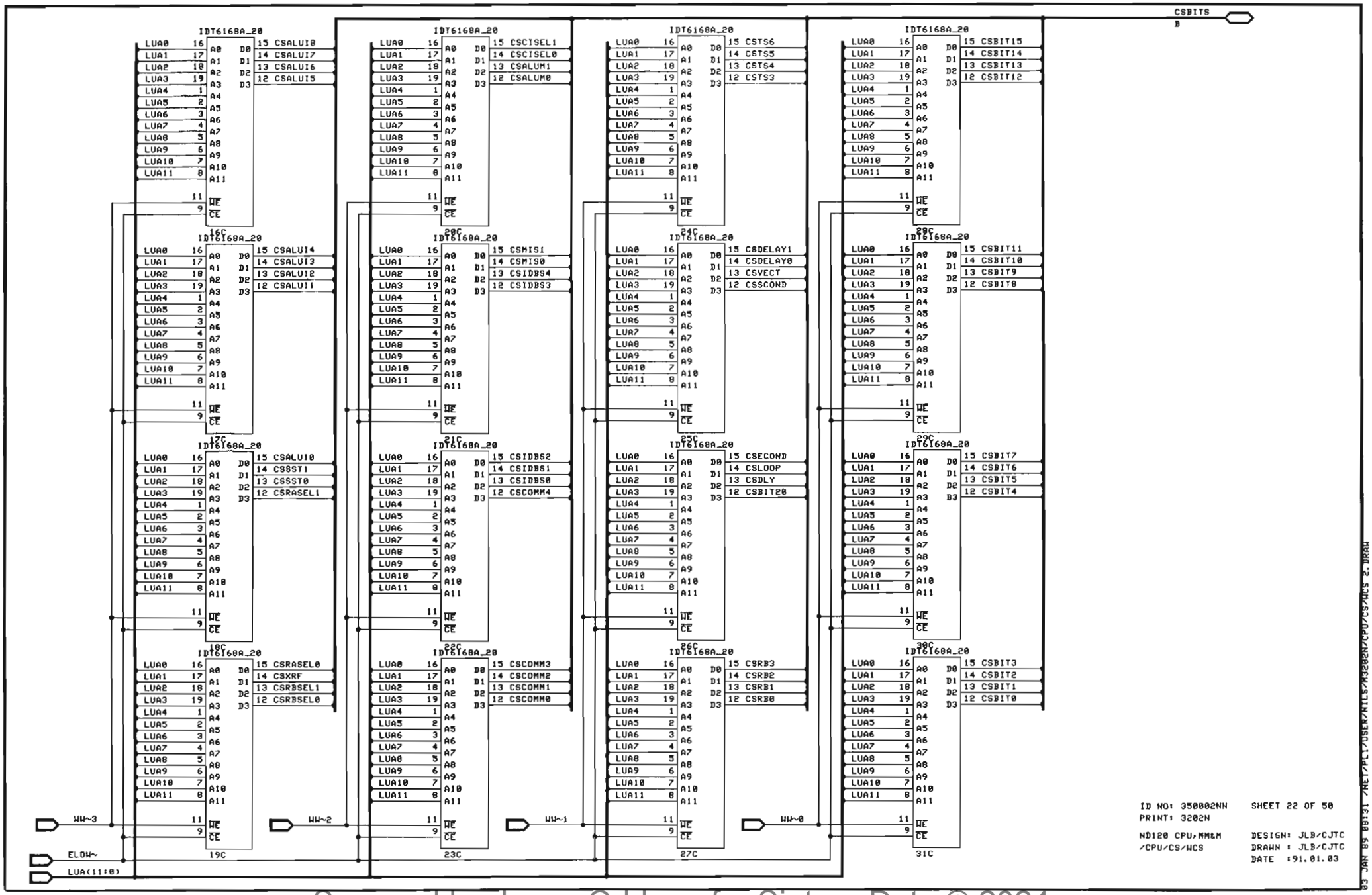

Scanned by Jonny Oddene for Sintran Data © 2024

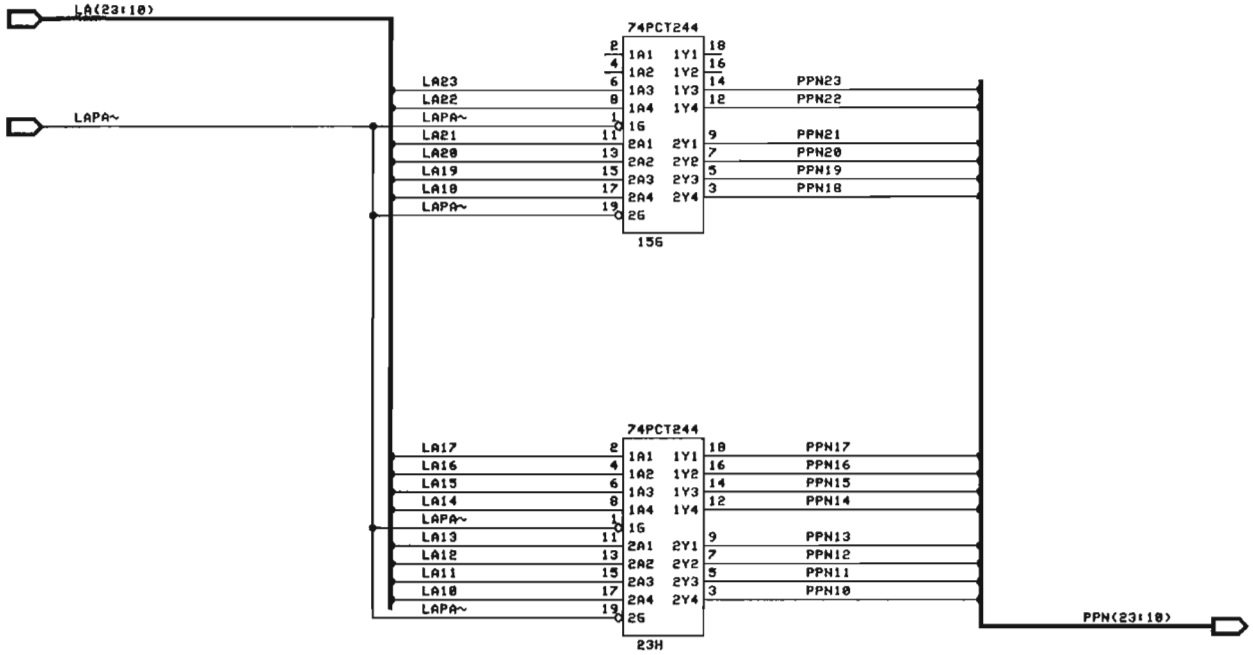

NORSK DATA LTD
BENHAM VALENCE
NEWBURY, BERKS
UNITED KINGDOM

ID NO: 350002NN PRINT: 3202N	SHEET 23 OF 50
ND120 CPU,MM&M CPU/LAPA LA TO PPN BUFF	DESIGN: JLB/CJTC DRAWN : JLB/CJTC DATE : 91.01.03
?	REV: .

12 JAN 89 10:14 /NET/PL1/USER/NILS/M3202N/CPU/LAPA 1.DRAW

Scanned by Jonny Oddene for Sintran Data © 2024

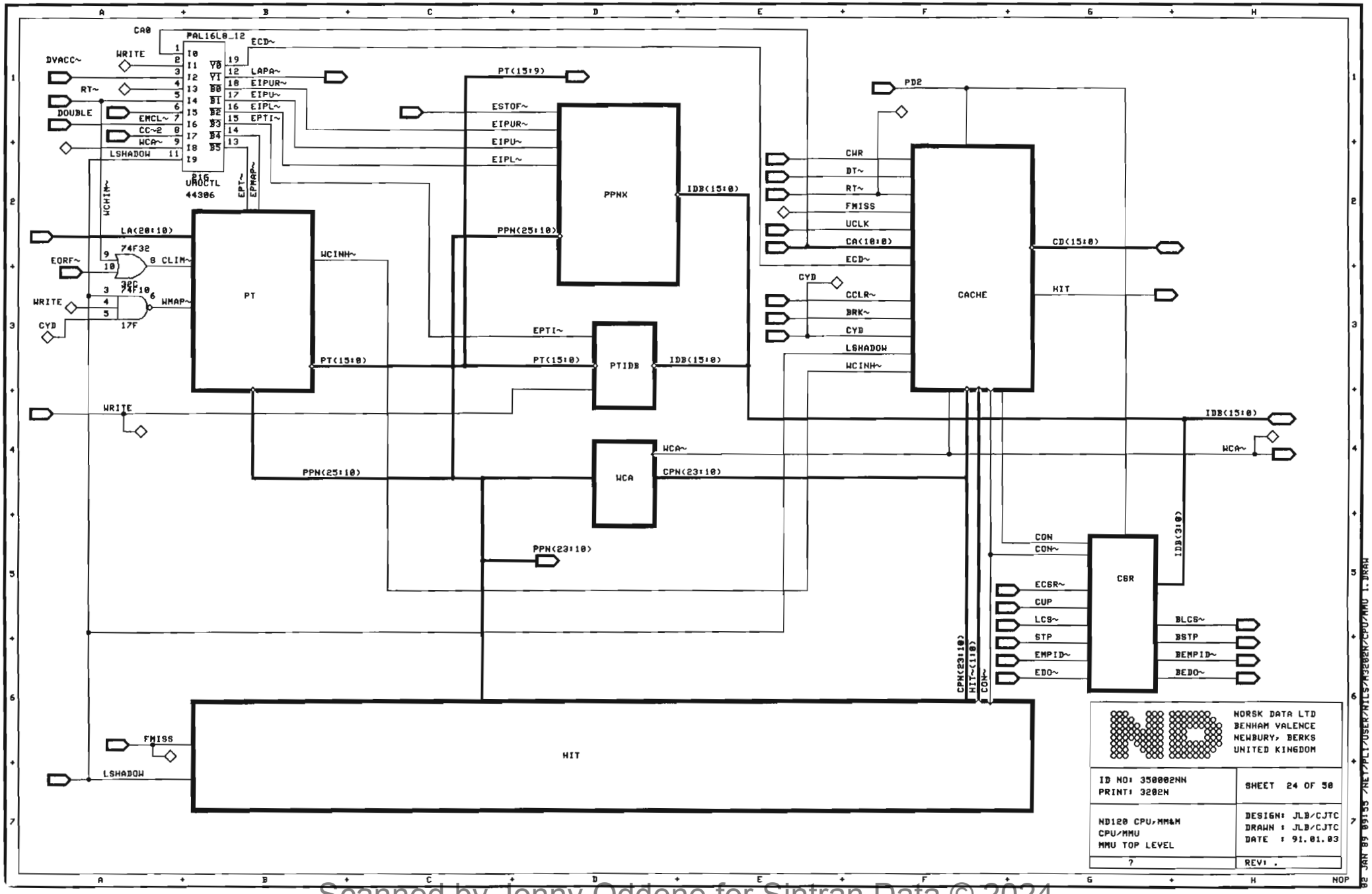

Scanned by Jonny Oddene for Sintran Data © 2024

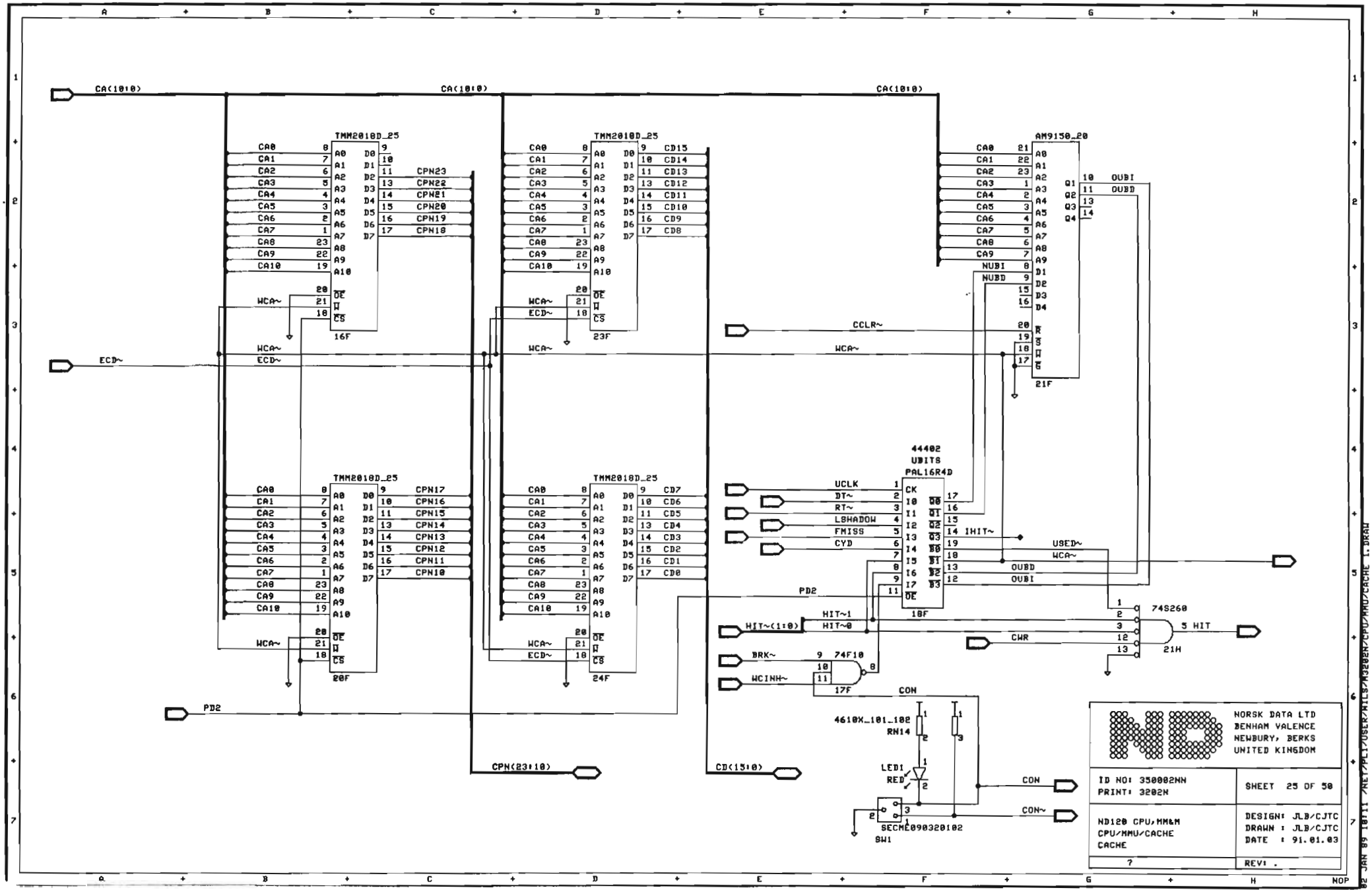

Scanned by Jonny Oddene for Sintran Data © 2024

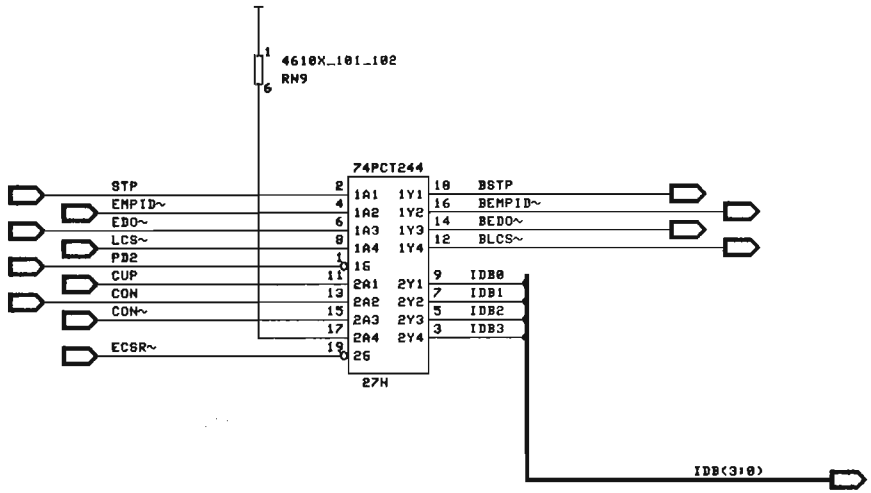

NORSK DATA LTD
BENHAM VALENCE
NEWBURY, BERKS
UNITED KINGDOM

ID NO: 350002NN PRINT: 3202N	SHEET 26 OF 50
ND120 CPU/MM&M CPU/MMU/CSR CACHE STATUS REG	DESIGN: JLB/CJTC DRAWN : JLB/CJTC DATE : 91.01.03
?	REV: .

02 JAN 09 10:09 /NET/PLI/USER/NICS/M3202N/CPU/MMU/CSR 1.DRAW

Scanned by Jonny Oddene for Sintran Data © 2024

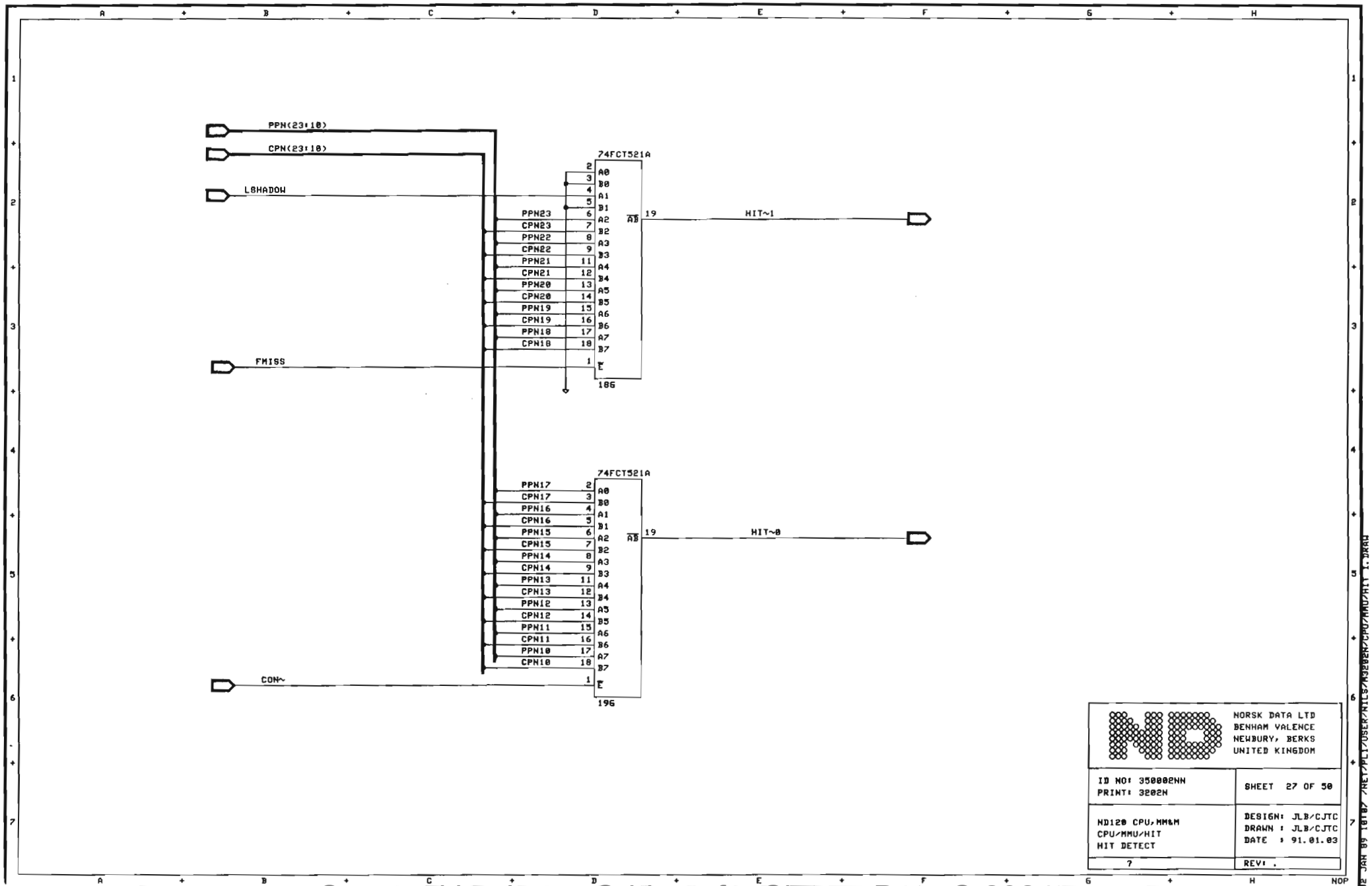

Scanned by Jonny Oddene for Sintran Data © 2024

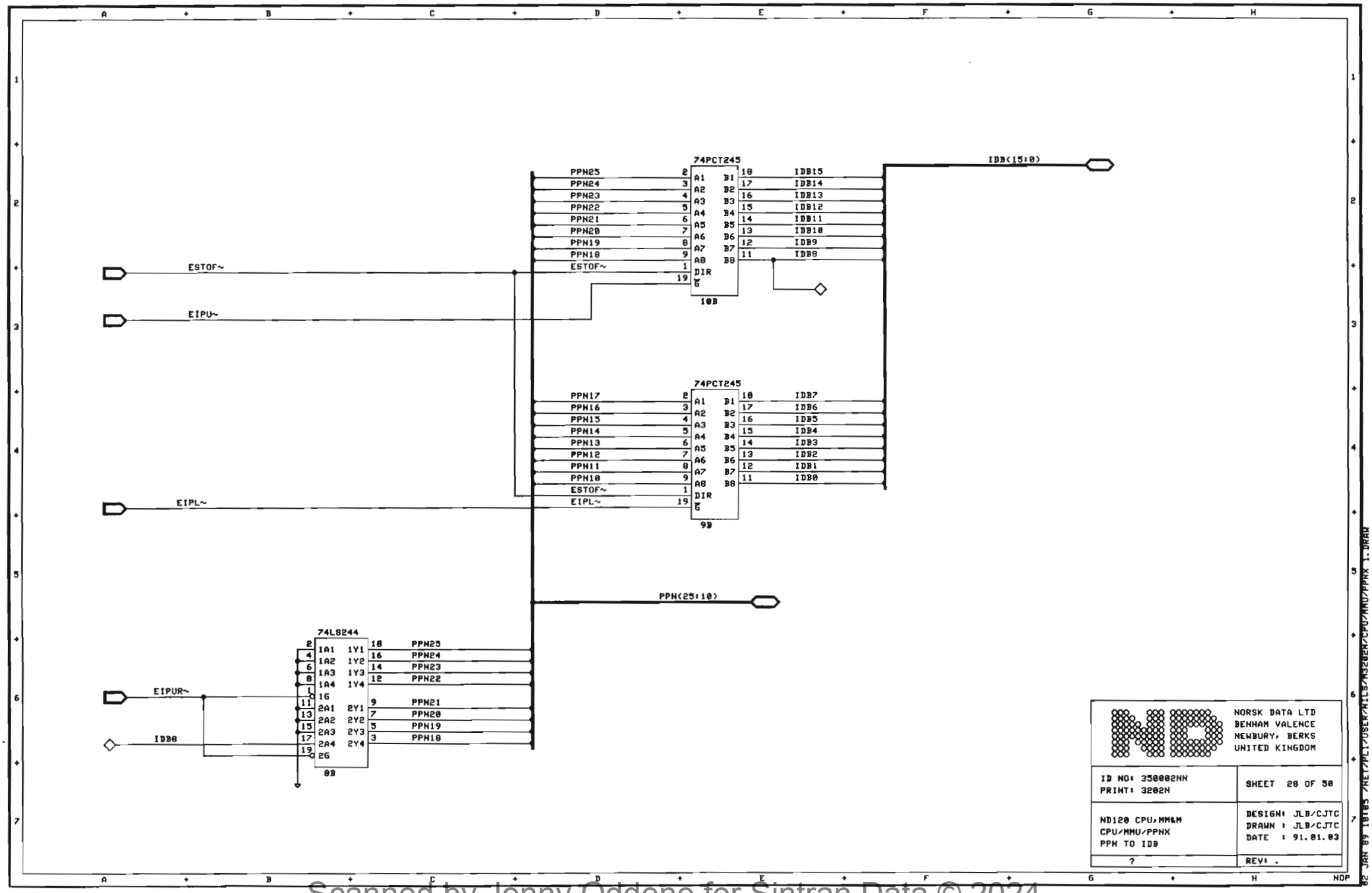

Scanned by Jonny Oddene for Sintran Data © 2024

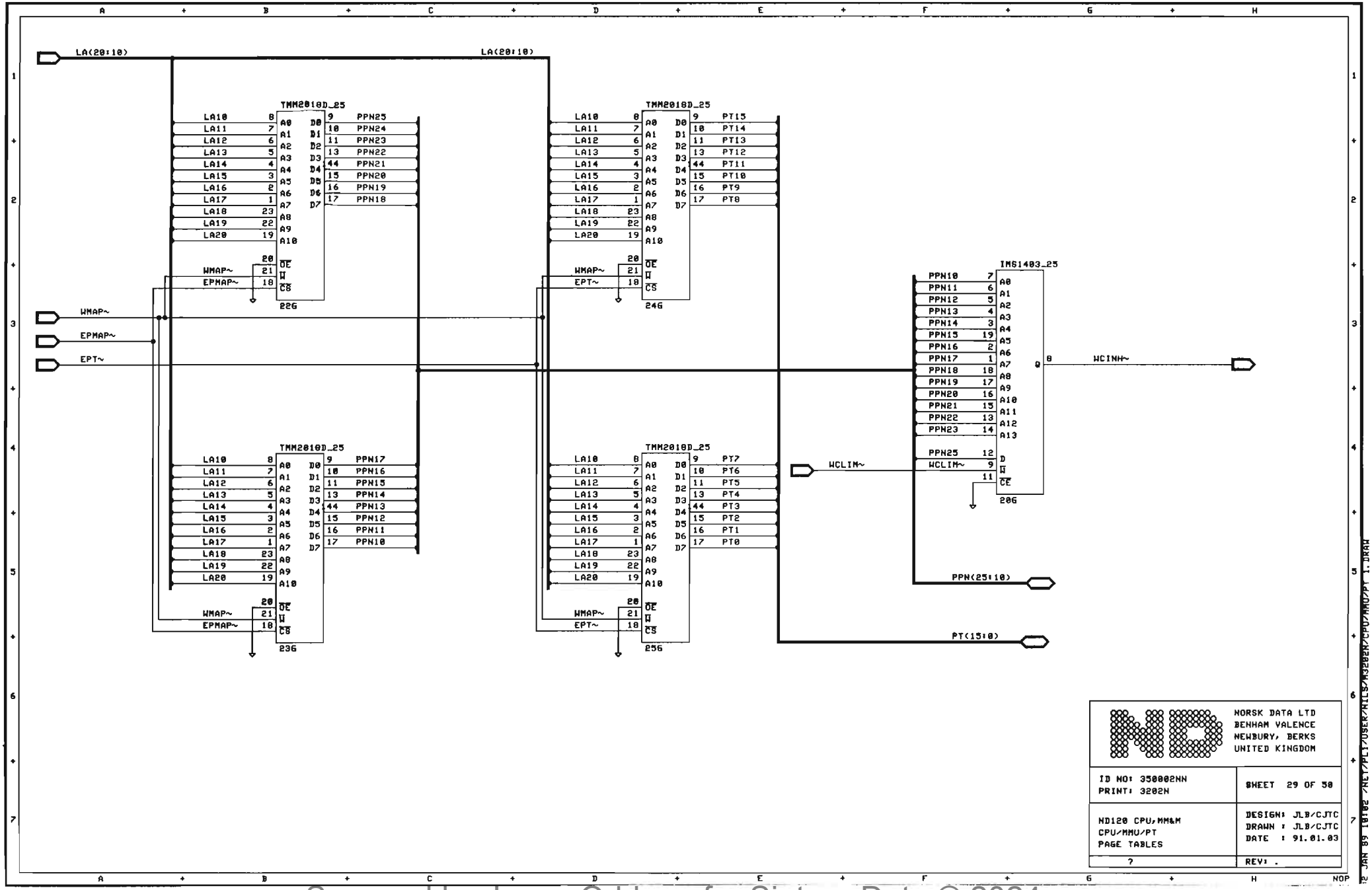

Scanned by Jonny Oddene for Sintran Data © 2024

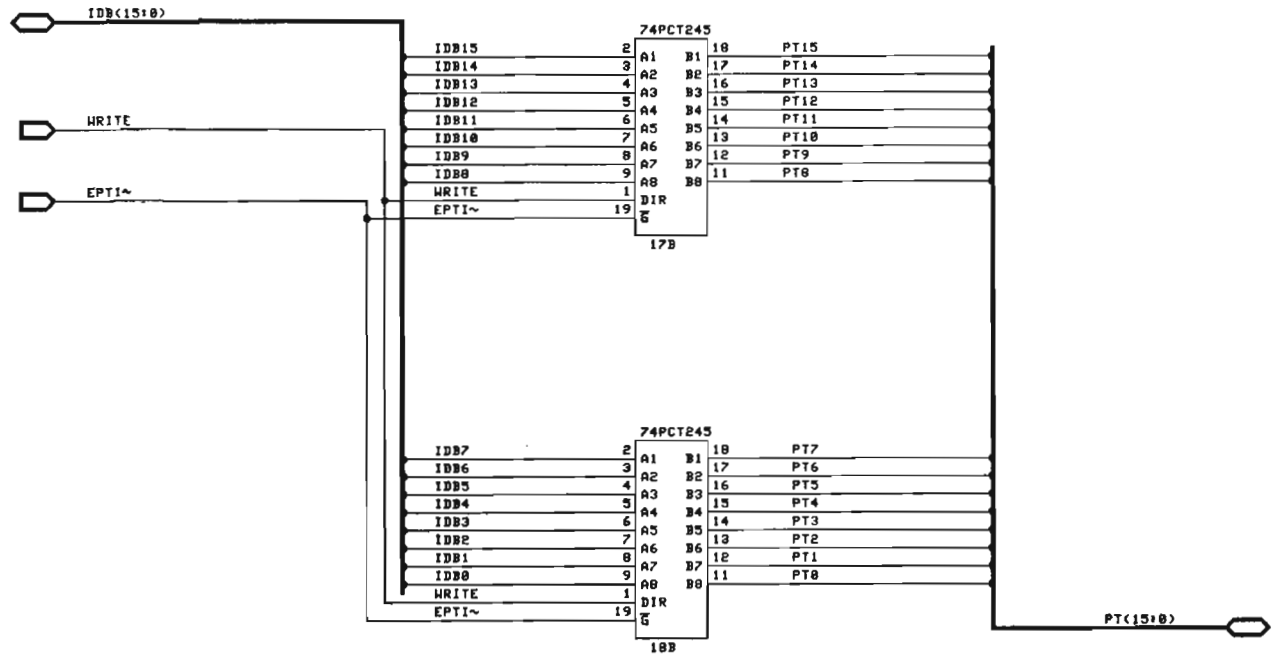

NORSK DATA LTD
BENHAM VALENCE
NEWBURY, BERKS
UNITED KINGDOM

ID NO: 350002NN PRINT: 3202N	SHEET 30 OF 50
ND120 CPU,MM&M CPU/MMU/PTIDB PT TO IDB	DESIGN: JLB/CJTC DRAWN : JLB/CJTC DATE : 91.01.03
?	REV: .

02 JAN 89 10:08 /NET/PLT/USER/NILS/N3202N/CPU/MMU/PTIDB 1.DRAW

Scanned by Jonny Oddene for Sintran Data © 2024

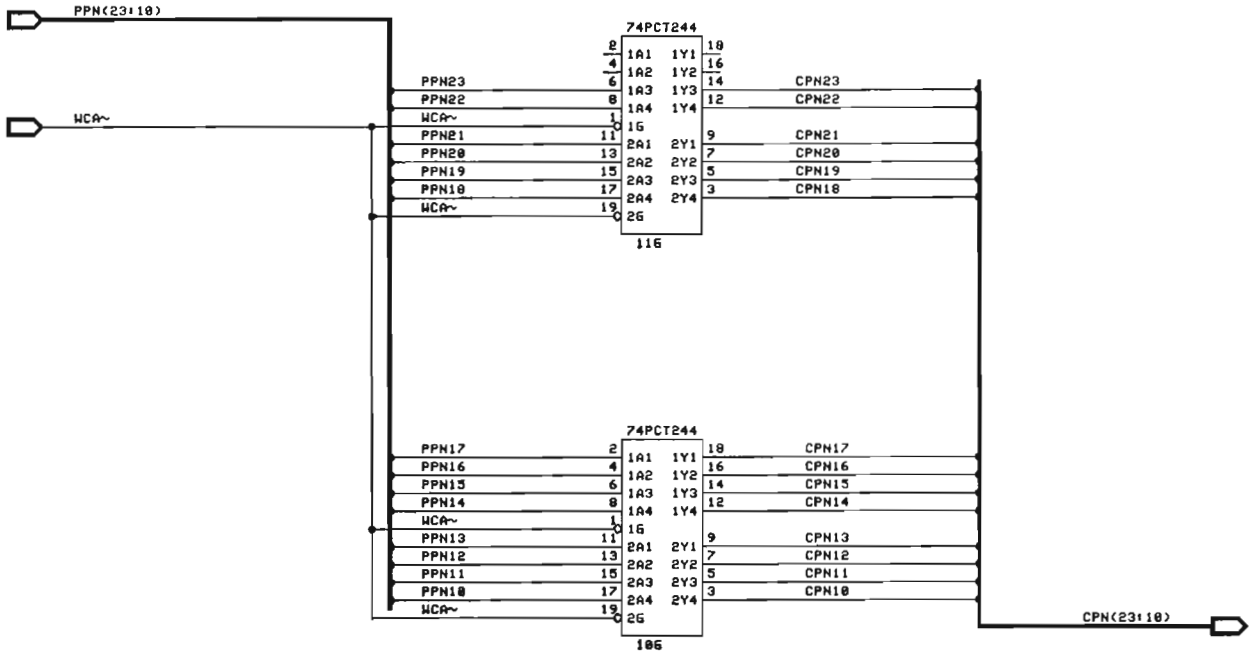

NORSK DATA LTD
BENHAM VALENCE
NEWBURY, BERKS
UNITED KINGDOM

ID NO: 350002NN PRINT: 3202N	SHEET 31 OF 58
NB120 CPU,MM&M CPU/MMU/WCA PPN TO CPN	DESIGN: JLB/CJTC DRAWN : JLB/CJTC DATE : 91.01.03
7	REV: .

02 JAN 89 09:58 /NET/PL17/USER/NILS/N3202N/CPU/MMU/WCA 1.DRAW

Scanned by Jonny Oddene for Sintran Data © 2024

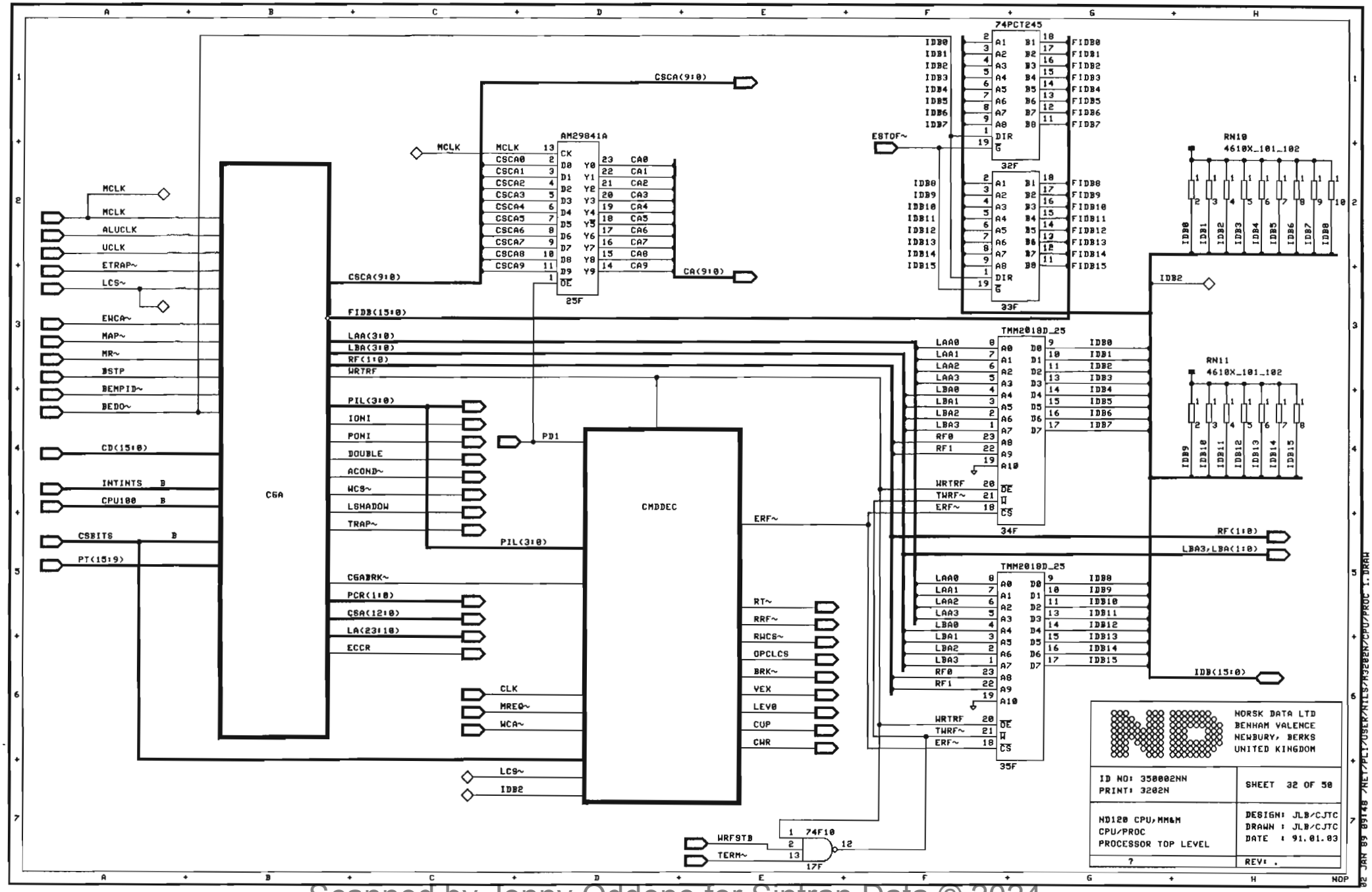

Scanned by Jonny Oddene for Sintran Data © 2024

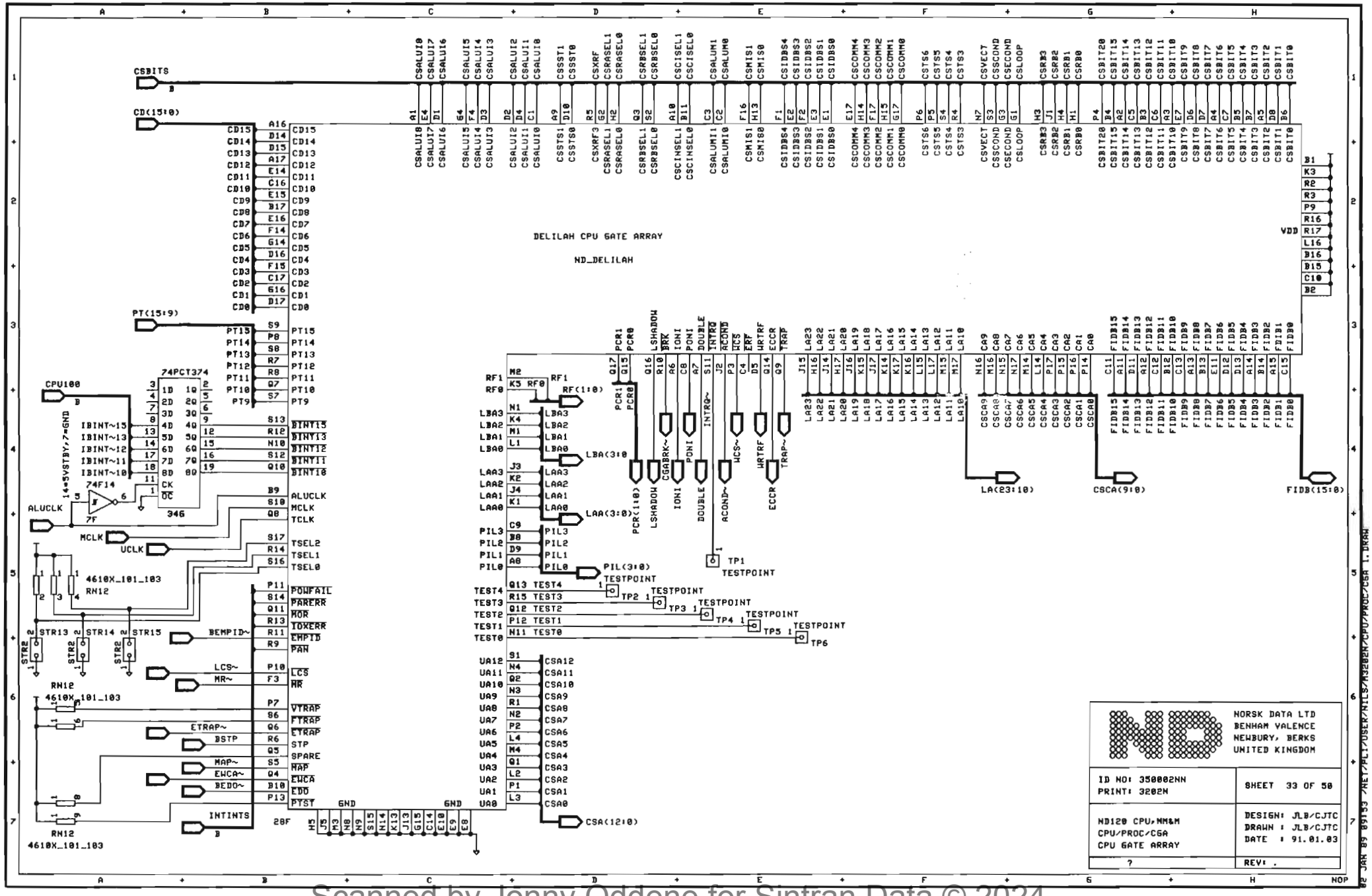

Scanned by Jonny Oddene for Sintran Data © 2024

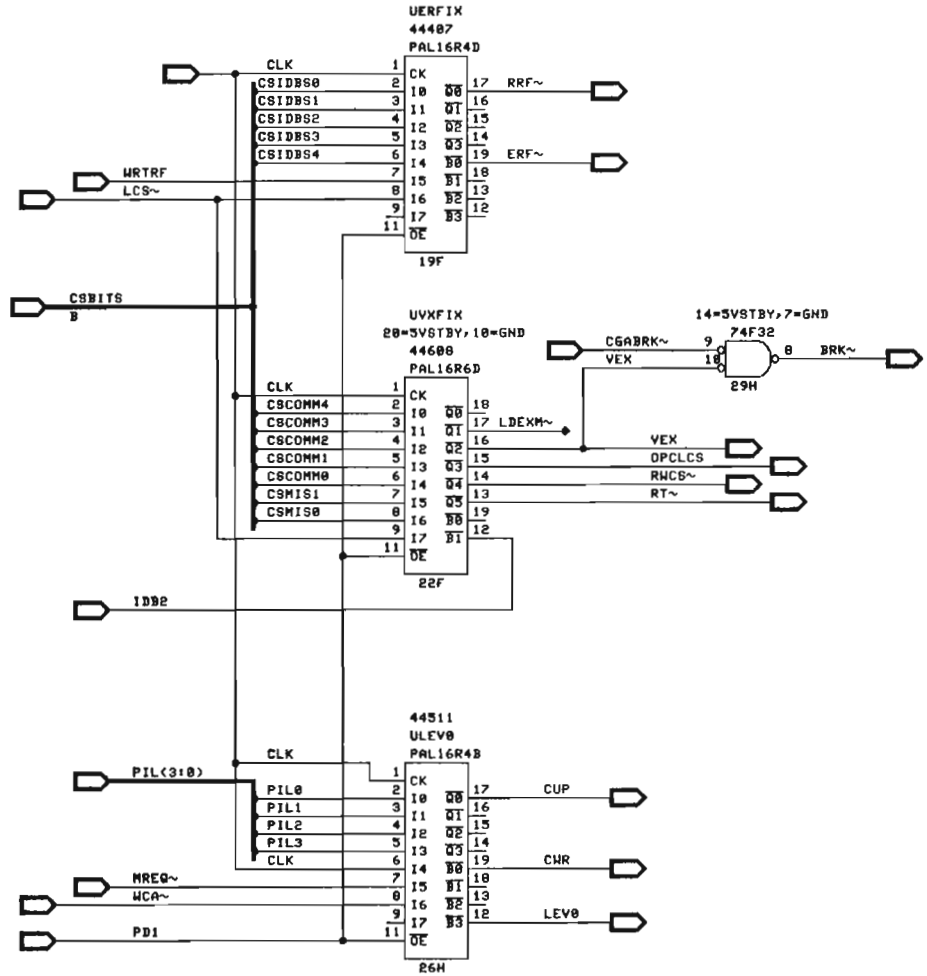

NORSK DATA LTD
BENHAM VALENCE
NEWBURY, BERKS
UNITED KINGDOM

ID NO: 350002NN PRINT: 3202N	SHEET 34 OF 50
ND120 CPU/MM&M CPU/PROC/CMDDEC COMMAND & IDB DECODE	DESIGN: JLB/CJTC DRAWN : JLB/CJTC DATE : 91.01.03
?	REV: .

02 JAN 89 09:51 /NET/PLI/USER/NILS/N3202EN/CPU/PROC/CMDDEC 1.DRAW

Scanned by Jonny Oddene for Sintran Data © 2024

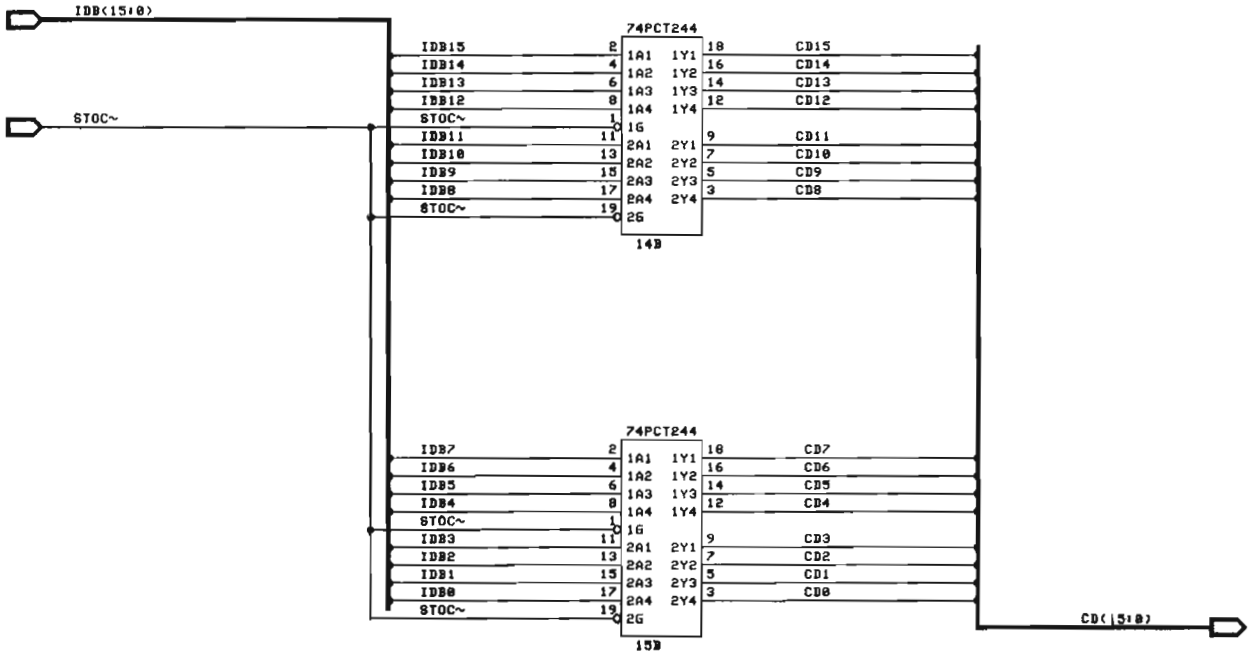

NORSK DATA LTD
BENHAM VALENCE
NEWBURY, BERKS
UNITED KINGDOM

ID NO: 350002NN PRINT: 3202N	SHEET 35 OF 50
ND120 CPU,MM&M CPU/STOC IDB TO CD	DESIGN: JLB/CJTC DRAWN : JLB/CJTC DATE : 91.01.03
?	REV: .

22 JAN 91 09:46 /NET/PCI/USER/NILS/ND120EN/CPU/STOC_1.DRAW

Scanned by Jonny Oddene for Sintran Data © 2024

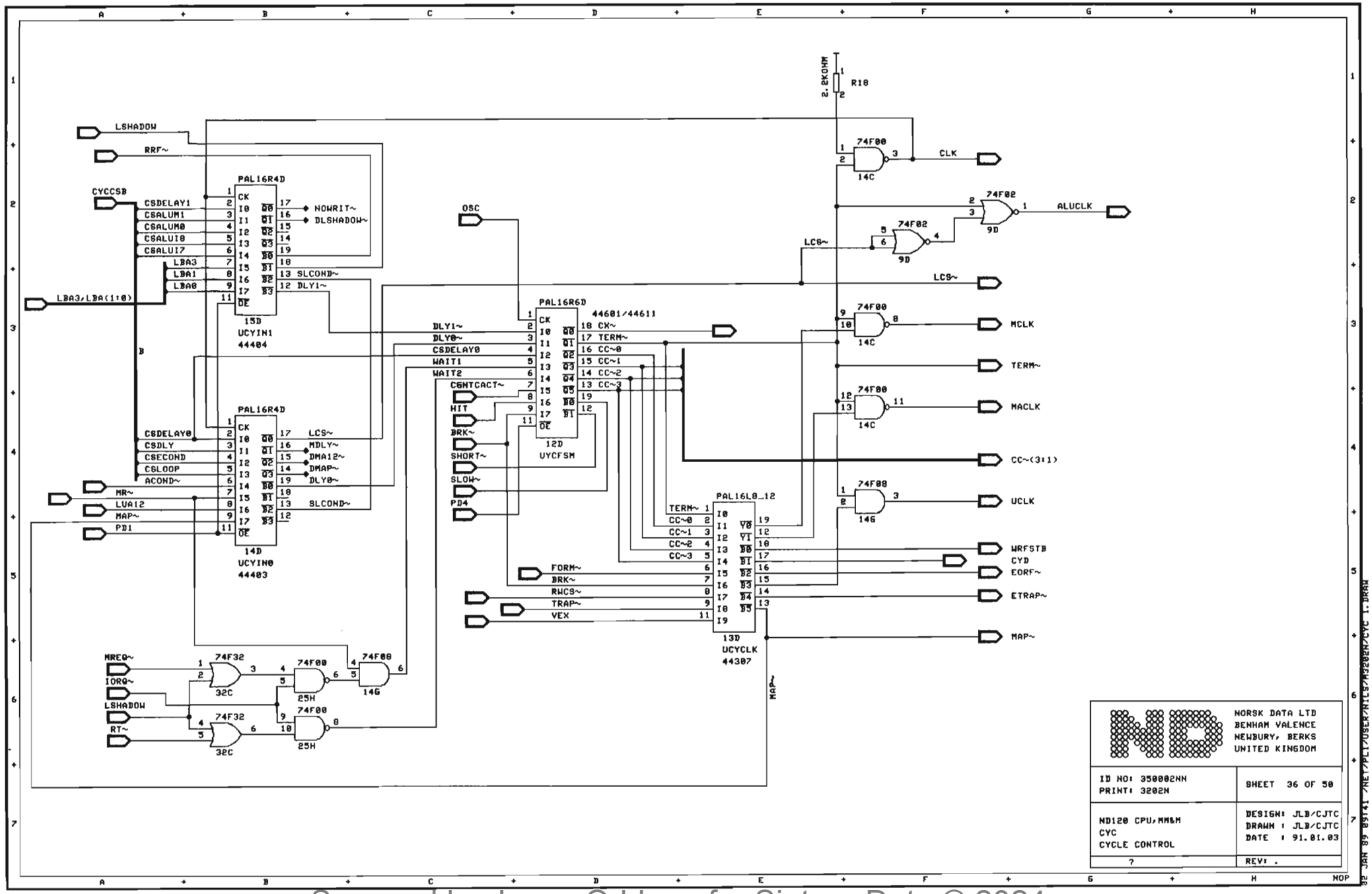

Scanned by Jonny Oddene for Sintran Data © 2024

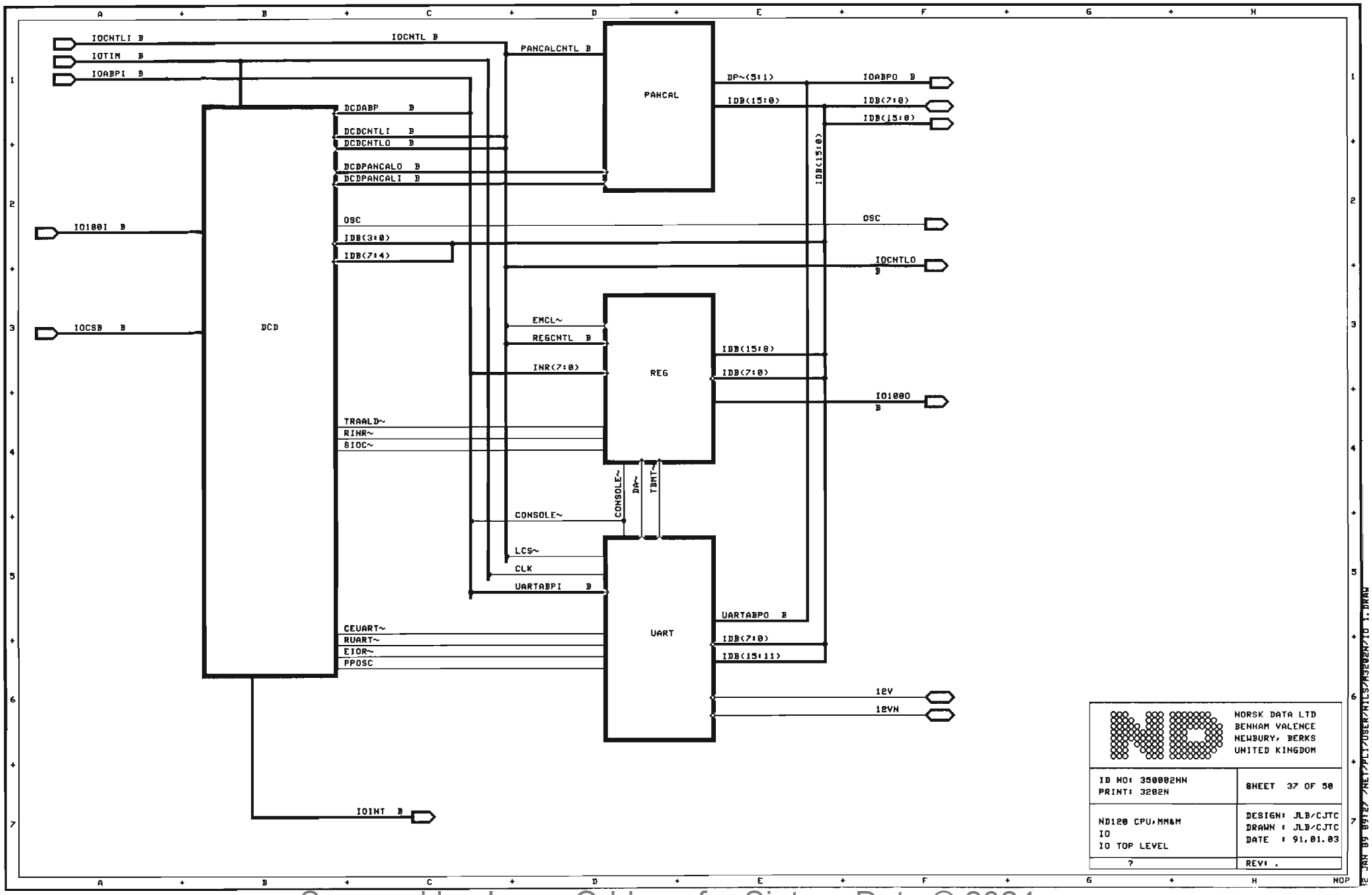

Scanned by Jonny Oddene for Sintran Data © 2024

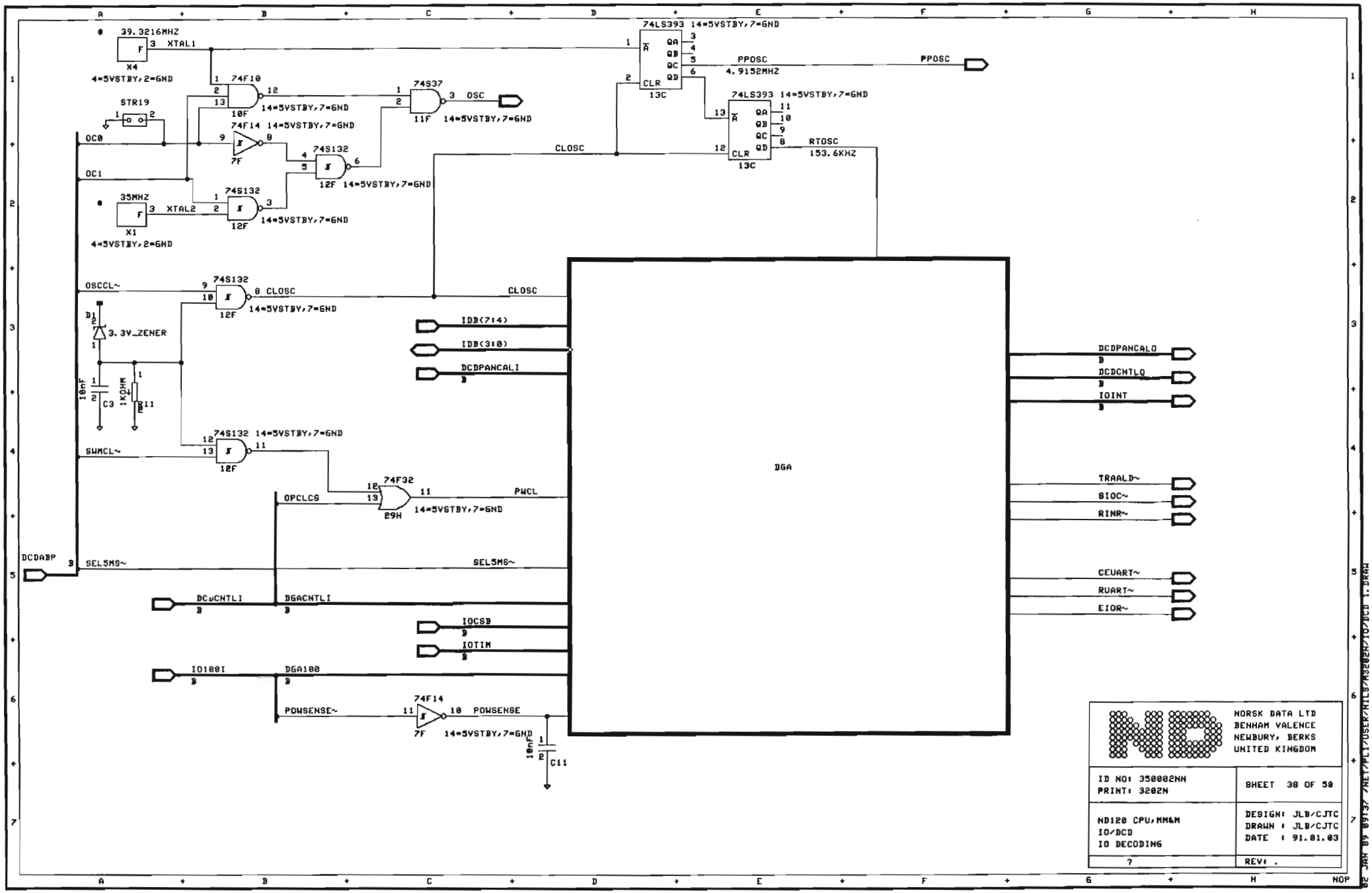

Scanned by Jonny Oddene for Sintran Data © 2024

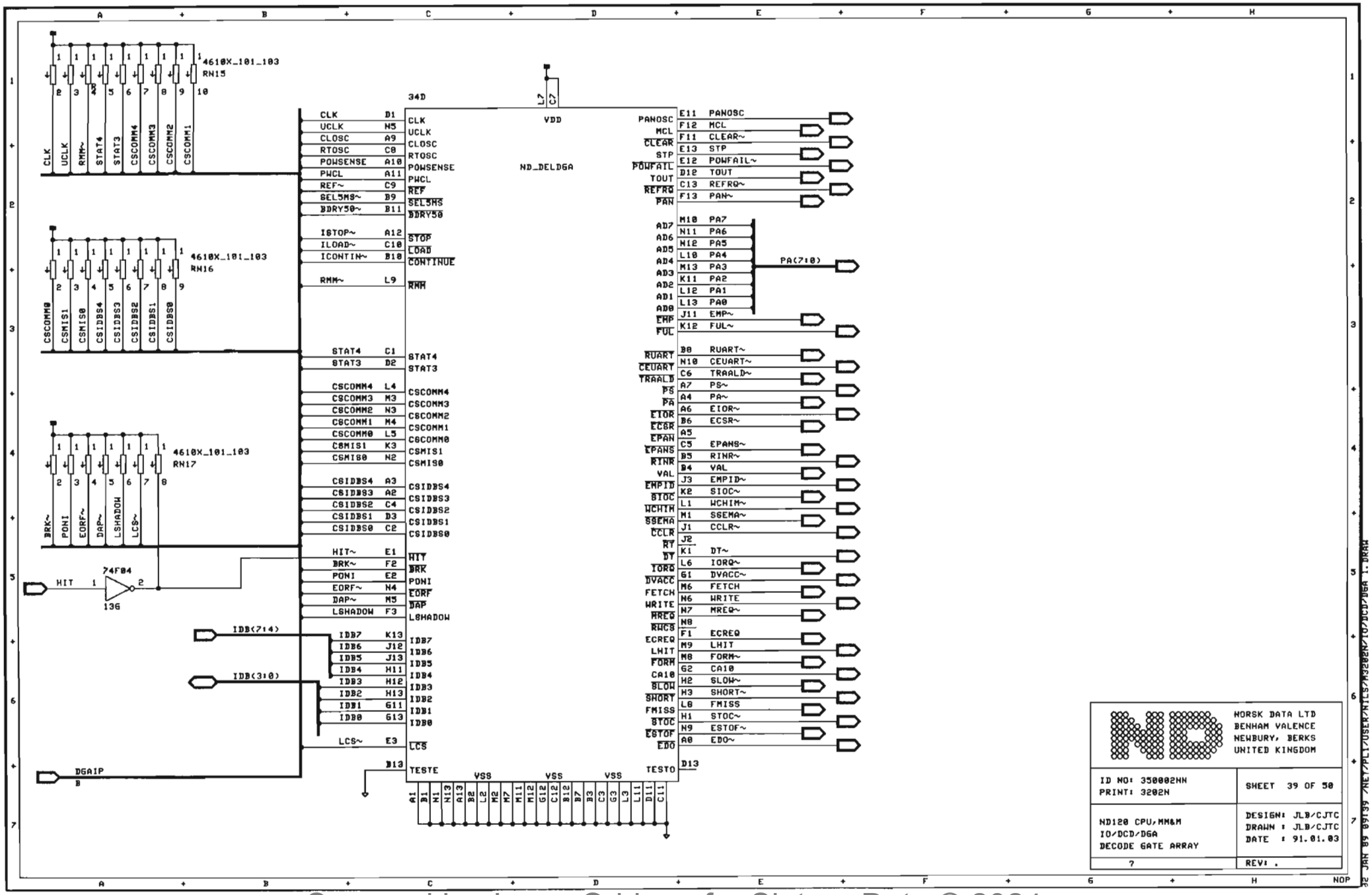

Scanned by Jonny Oddene for Sintran Data © 2024

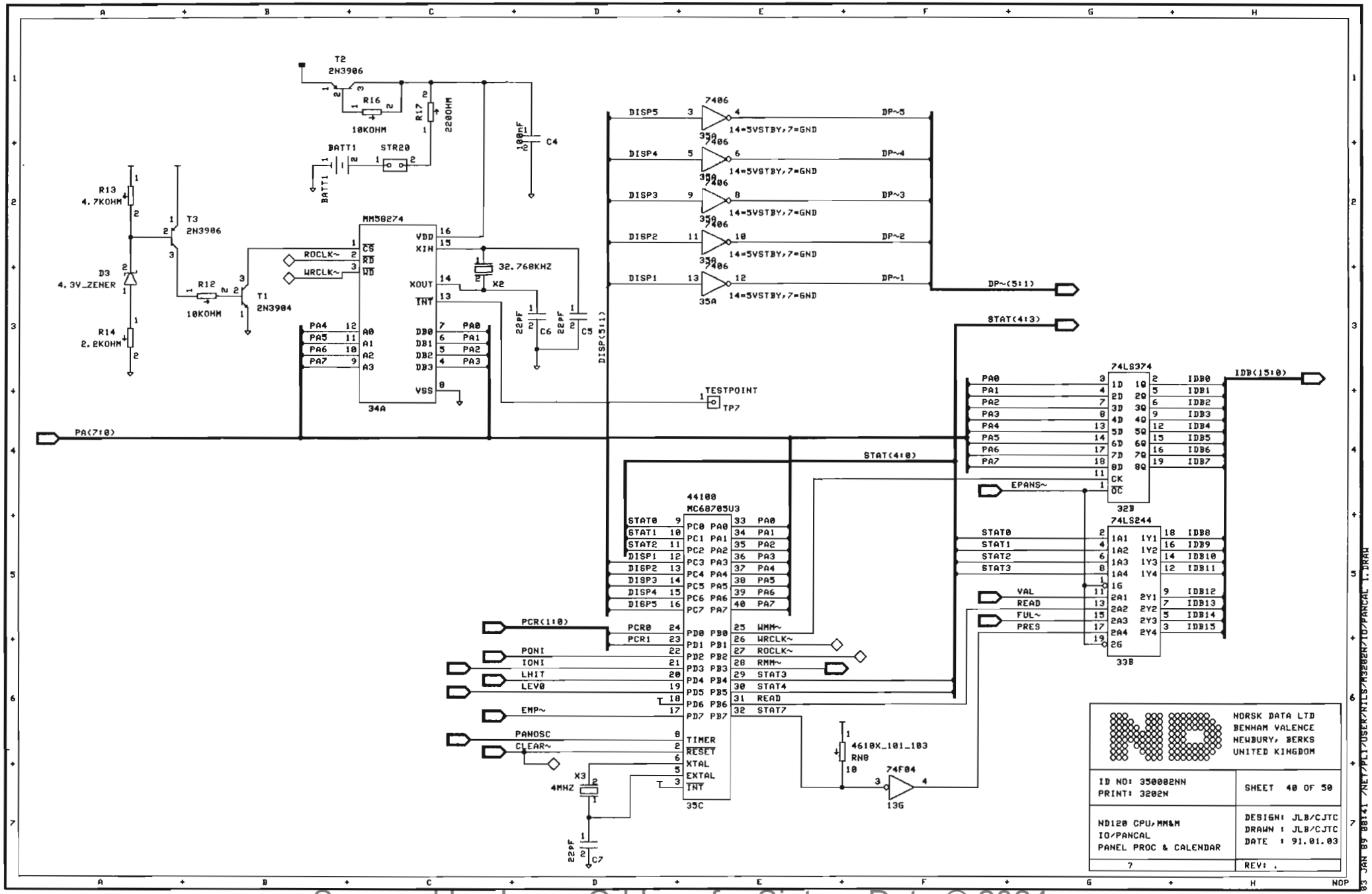

Scanned by Jonny Oddene for Sintran Data © 2024

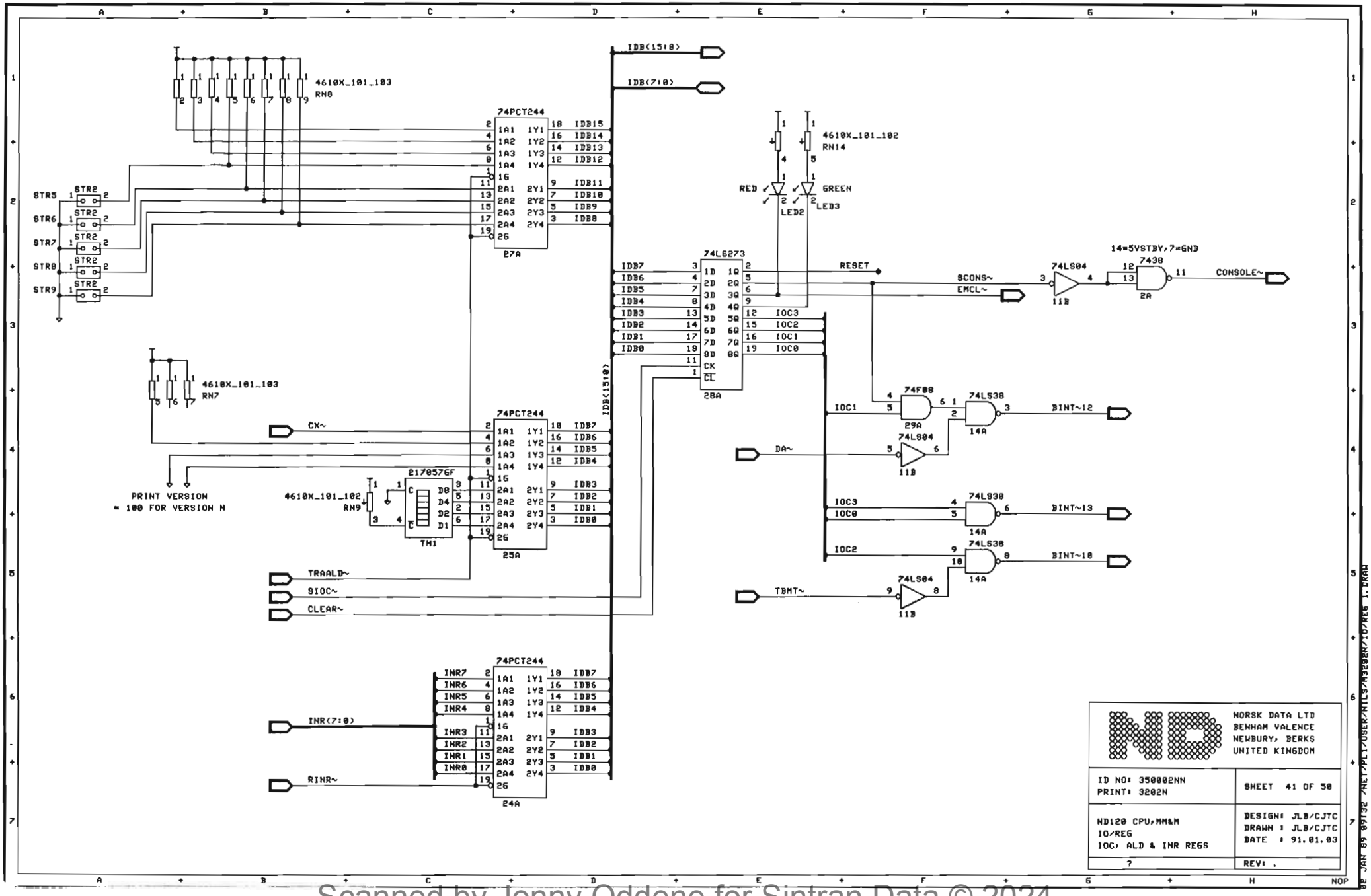

Scanned by Jonny Oddene for Sintran Data © 2024

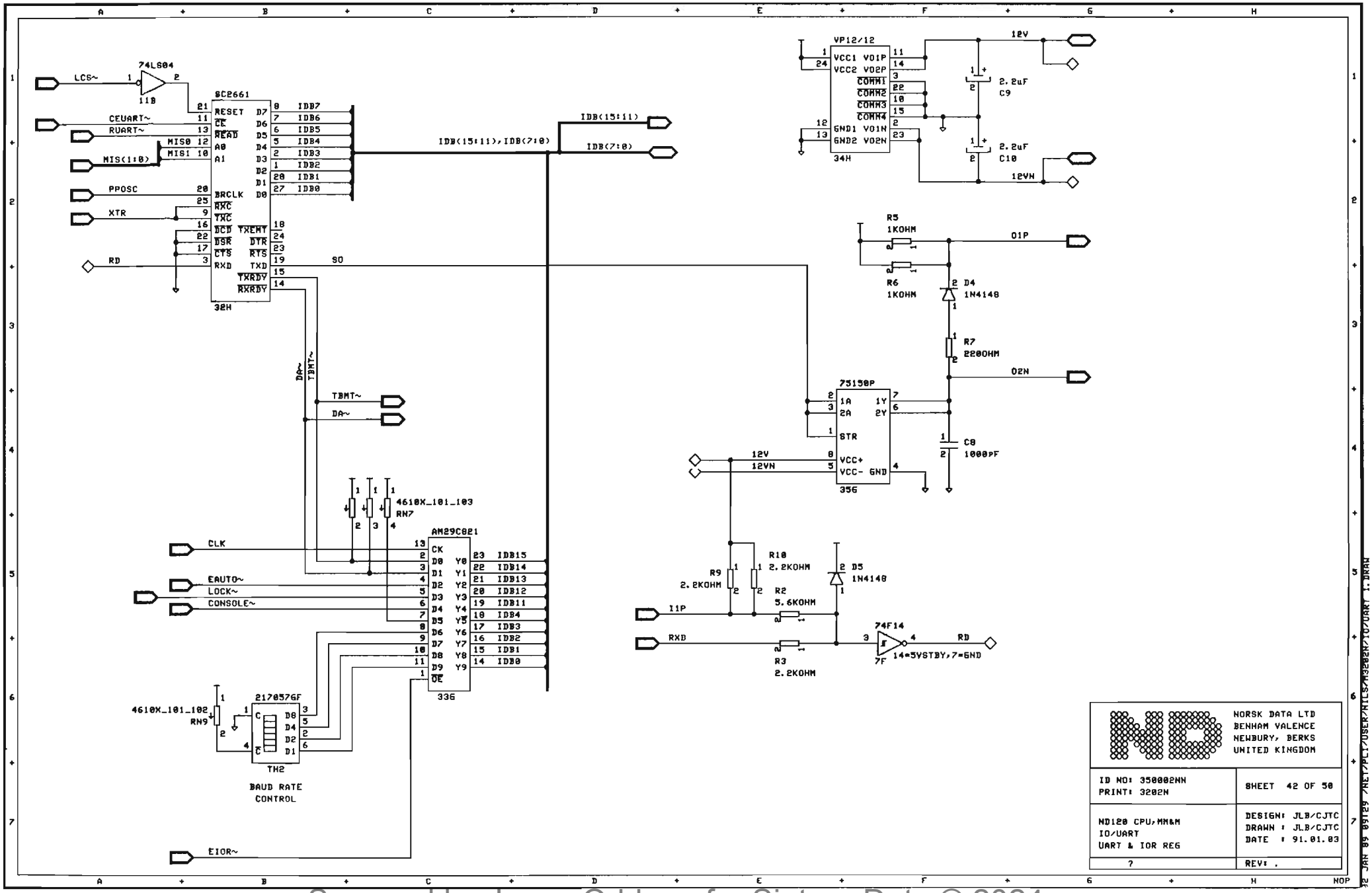

Scanned by Jonny Oddene for Sintran Data © 2024

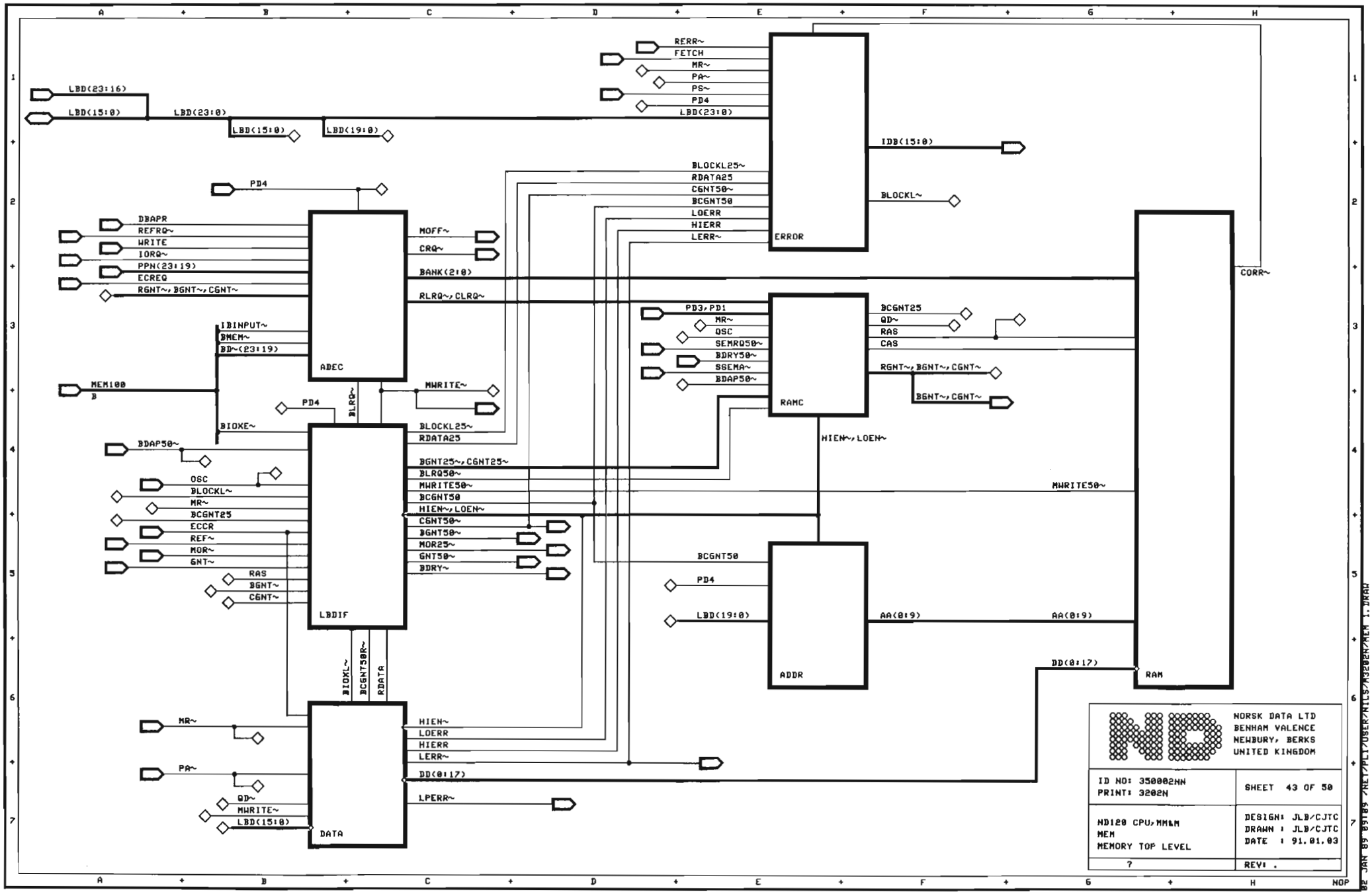

Scanned by Jonny Oddene for Sintran Data © 2024

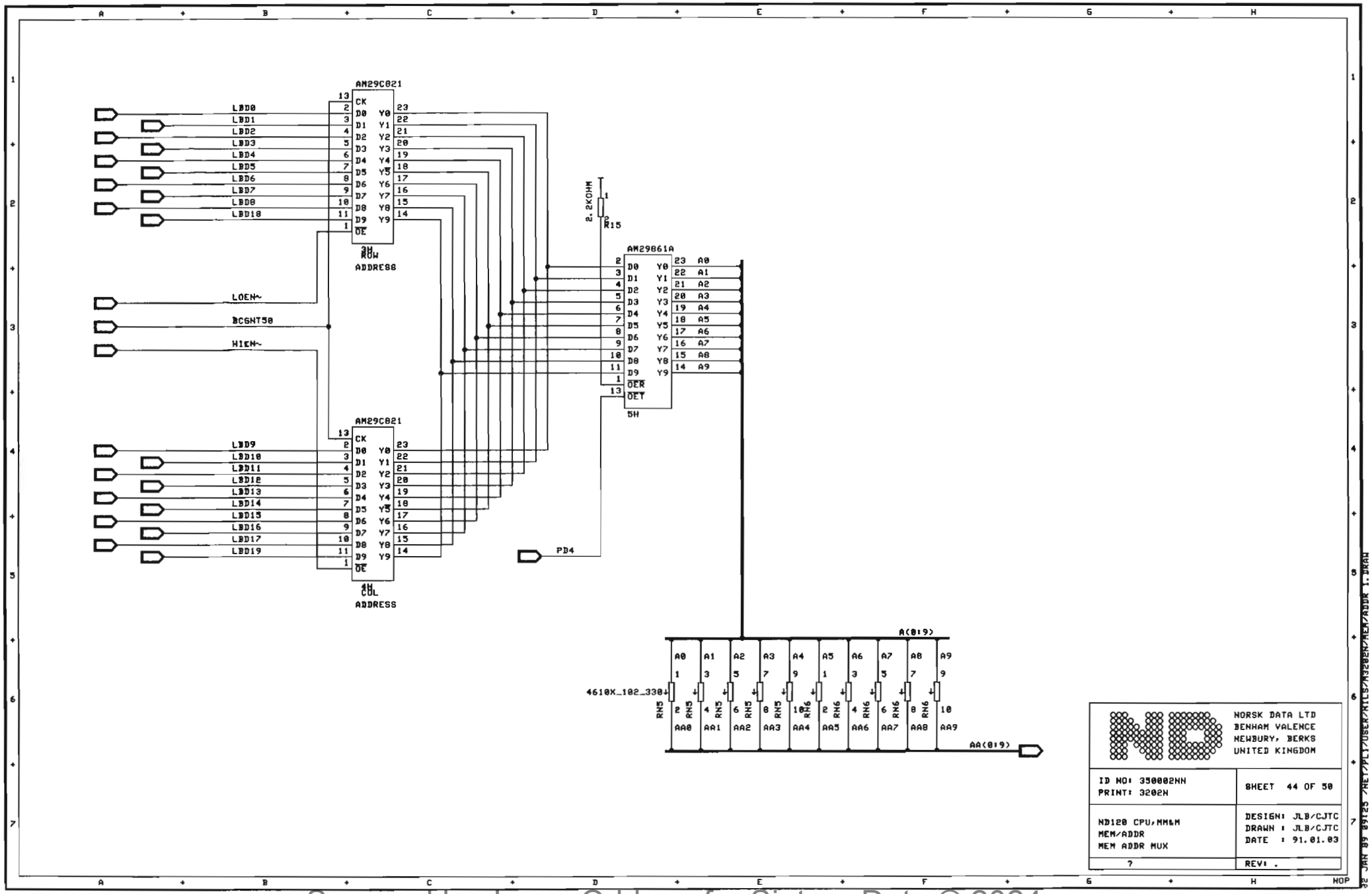

Scanned by Jonny Oddene for Sintran Data © 2024

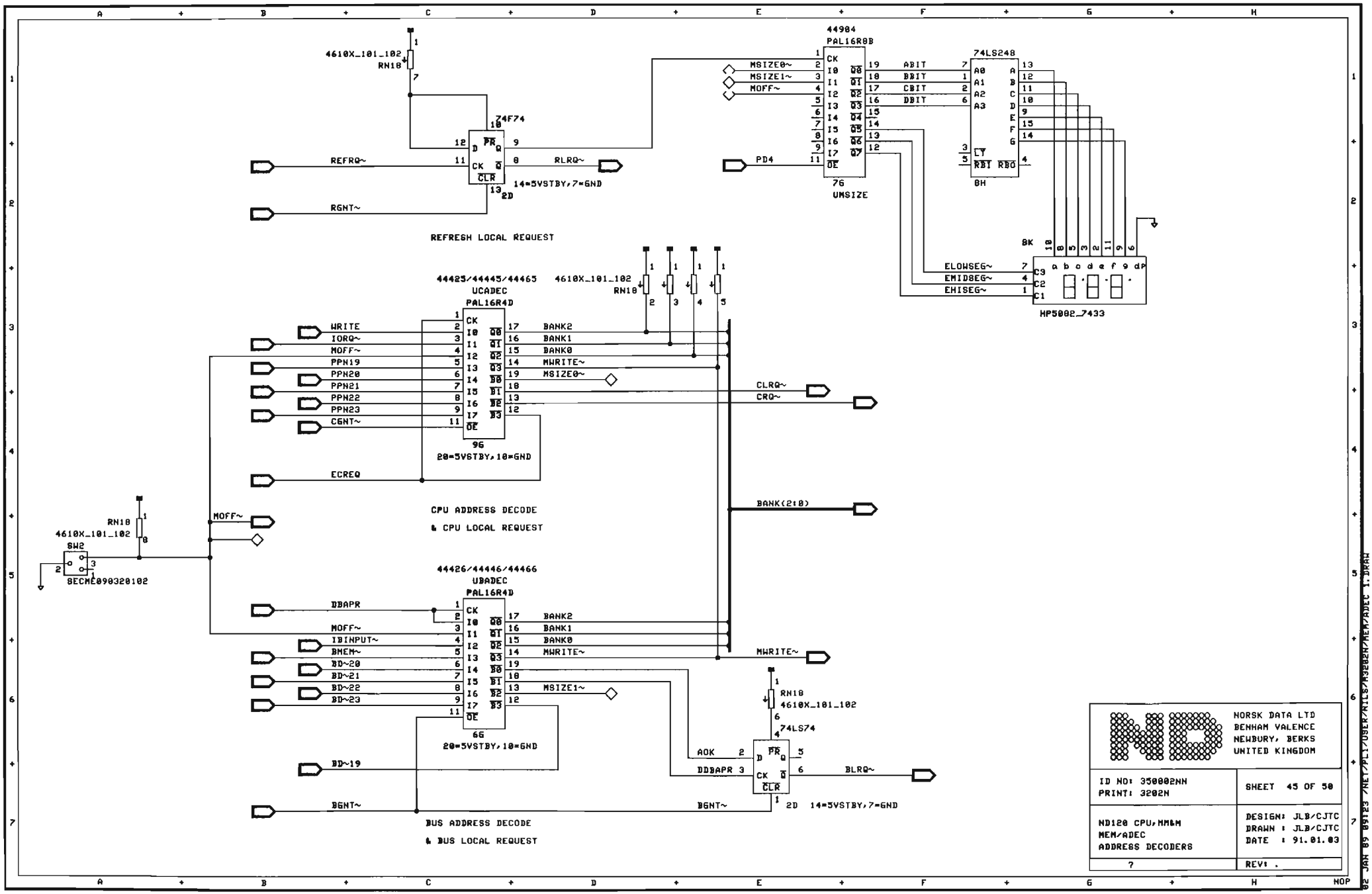

Scanned by Jonny Oddene for Sintran Data © 2024

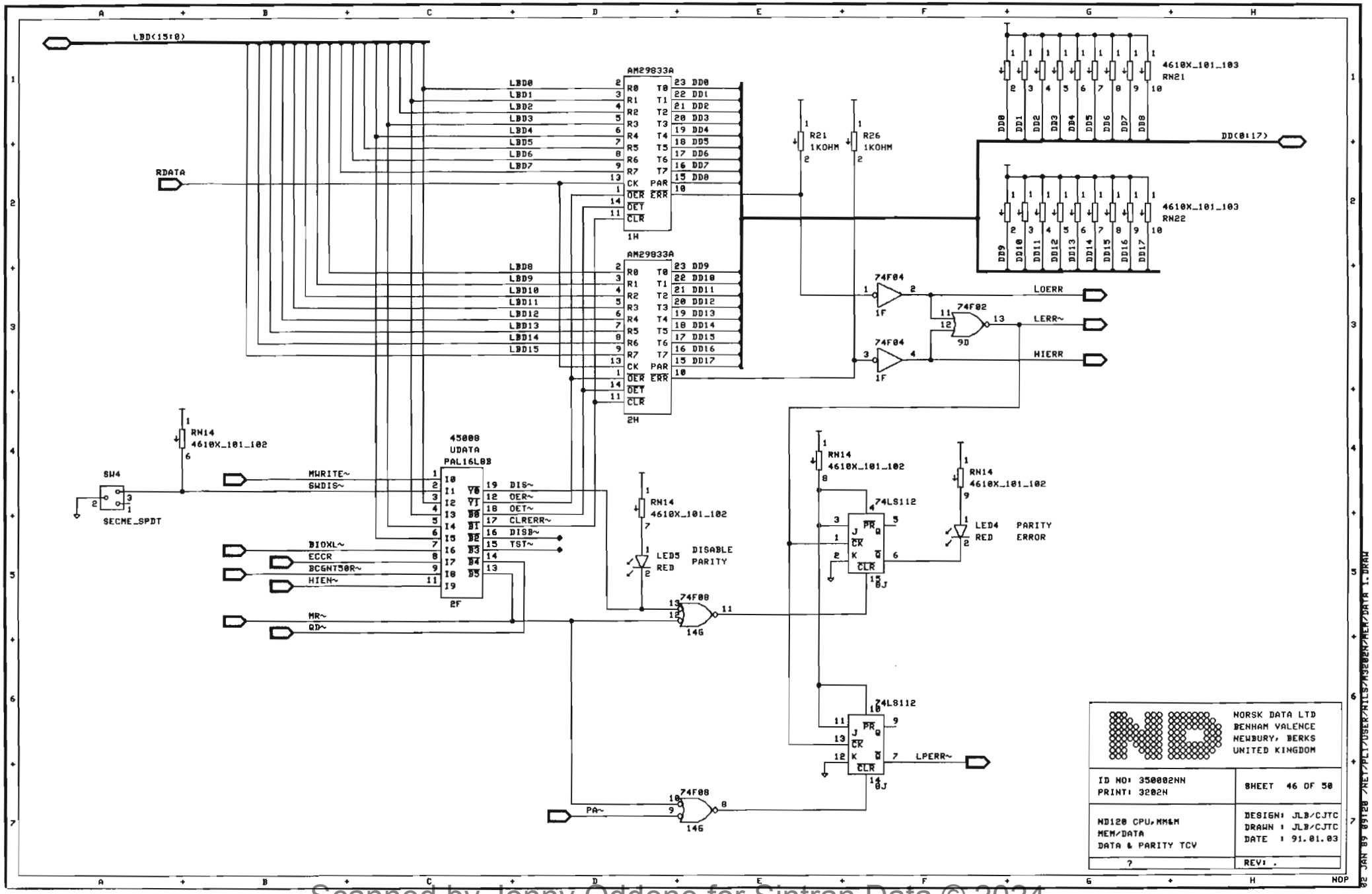

Scanned by Jonny Oddene for Sintran Data © 2024

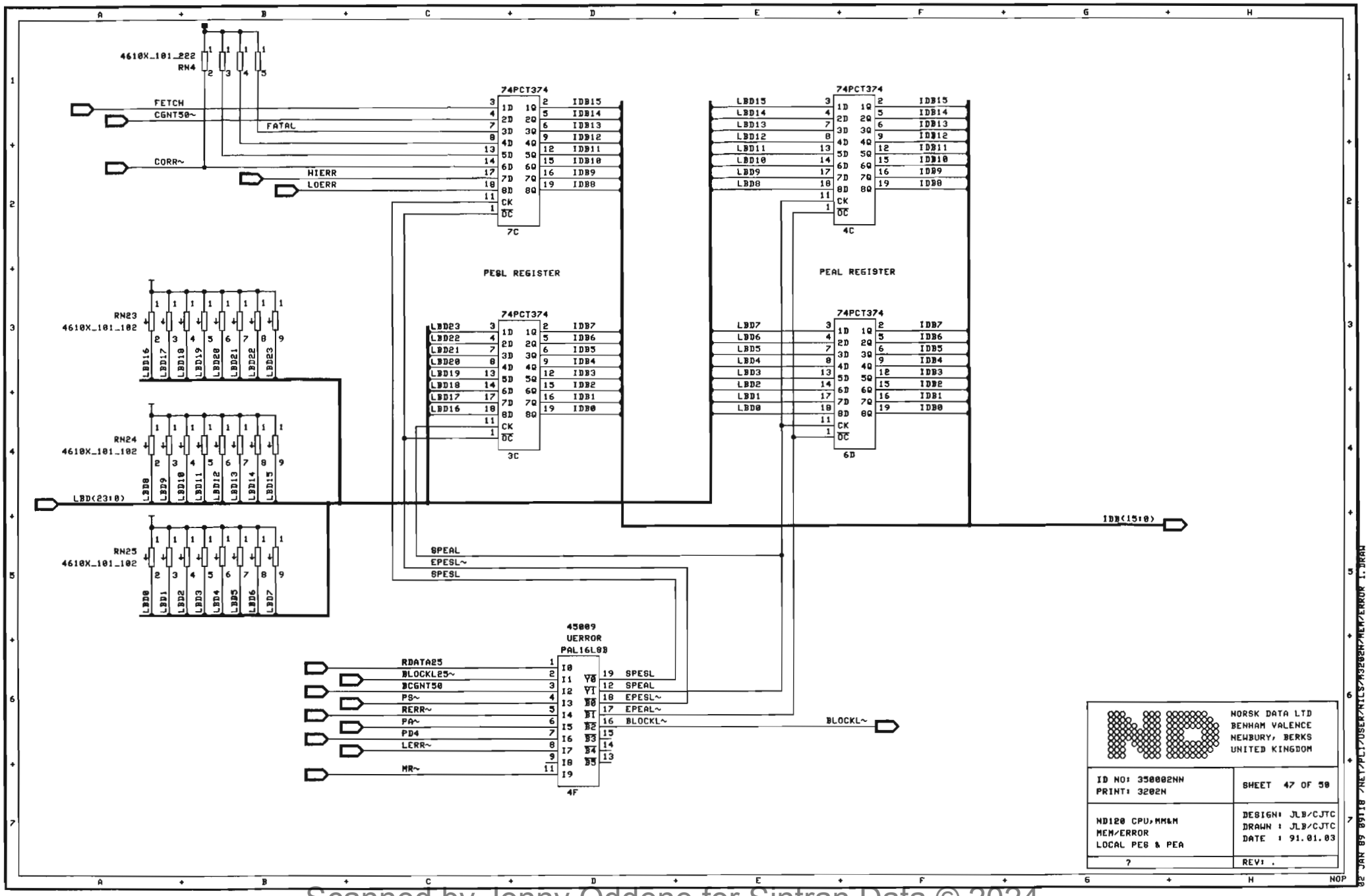

Scanned by Jonny Oddene for Sintran Data © 2024

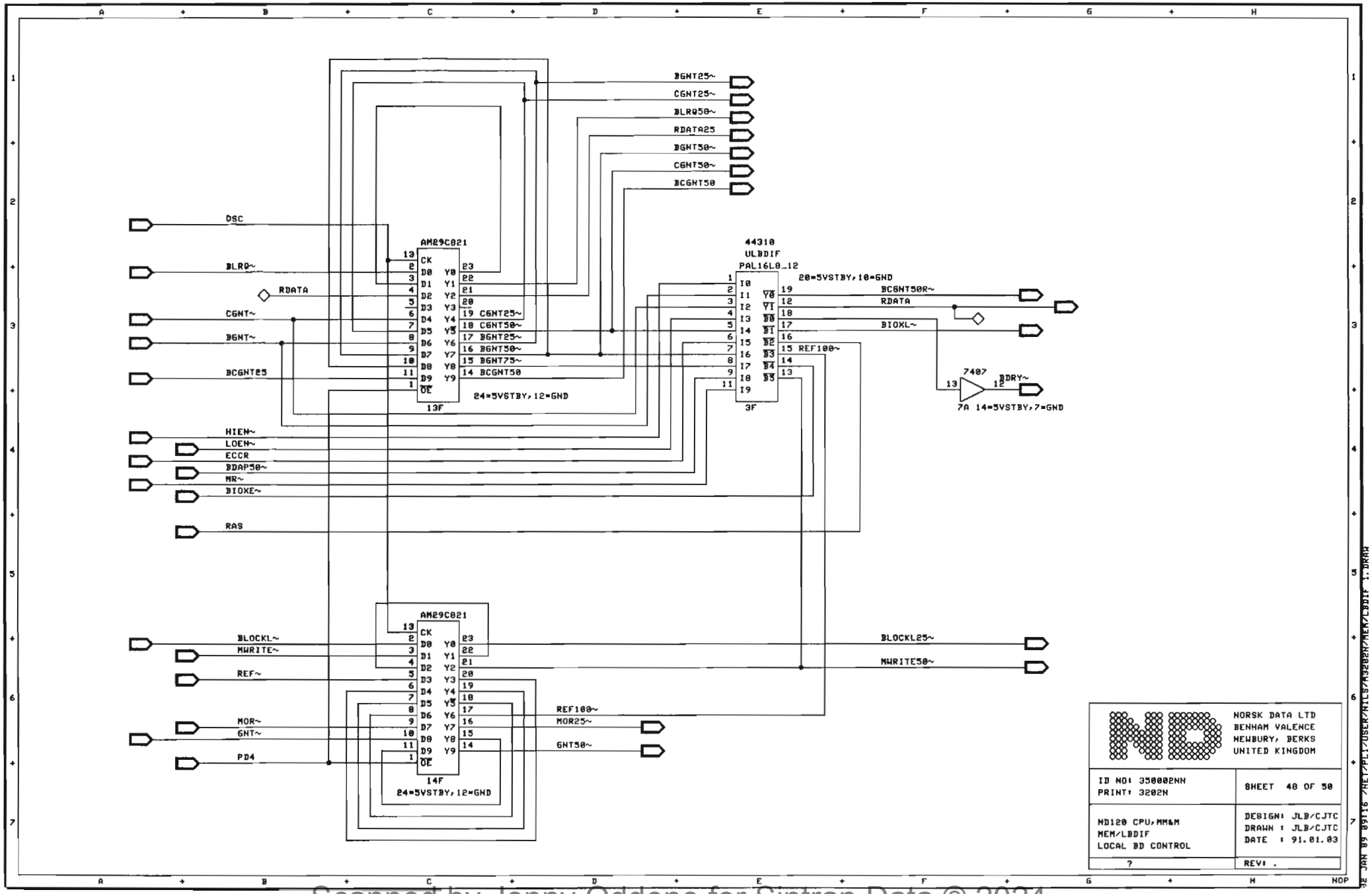

Scanned by Jonny Oddene for Sintran Data © 2024

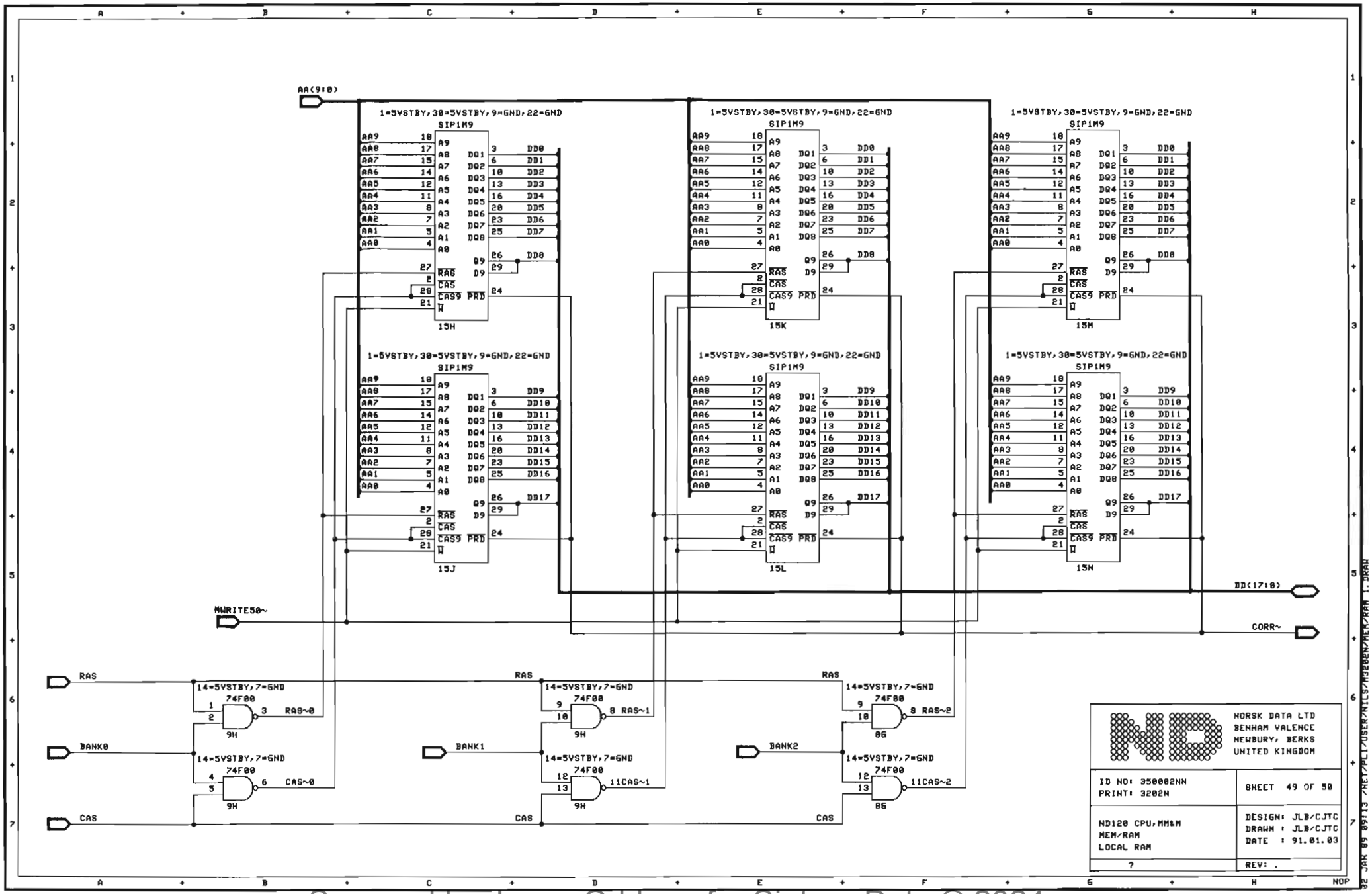

Scanned by Jonny Oddene for Sintran Data © 2024

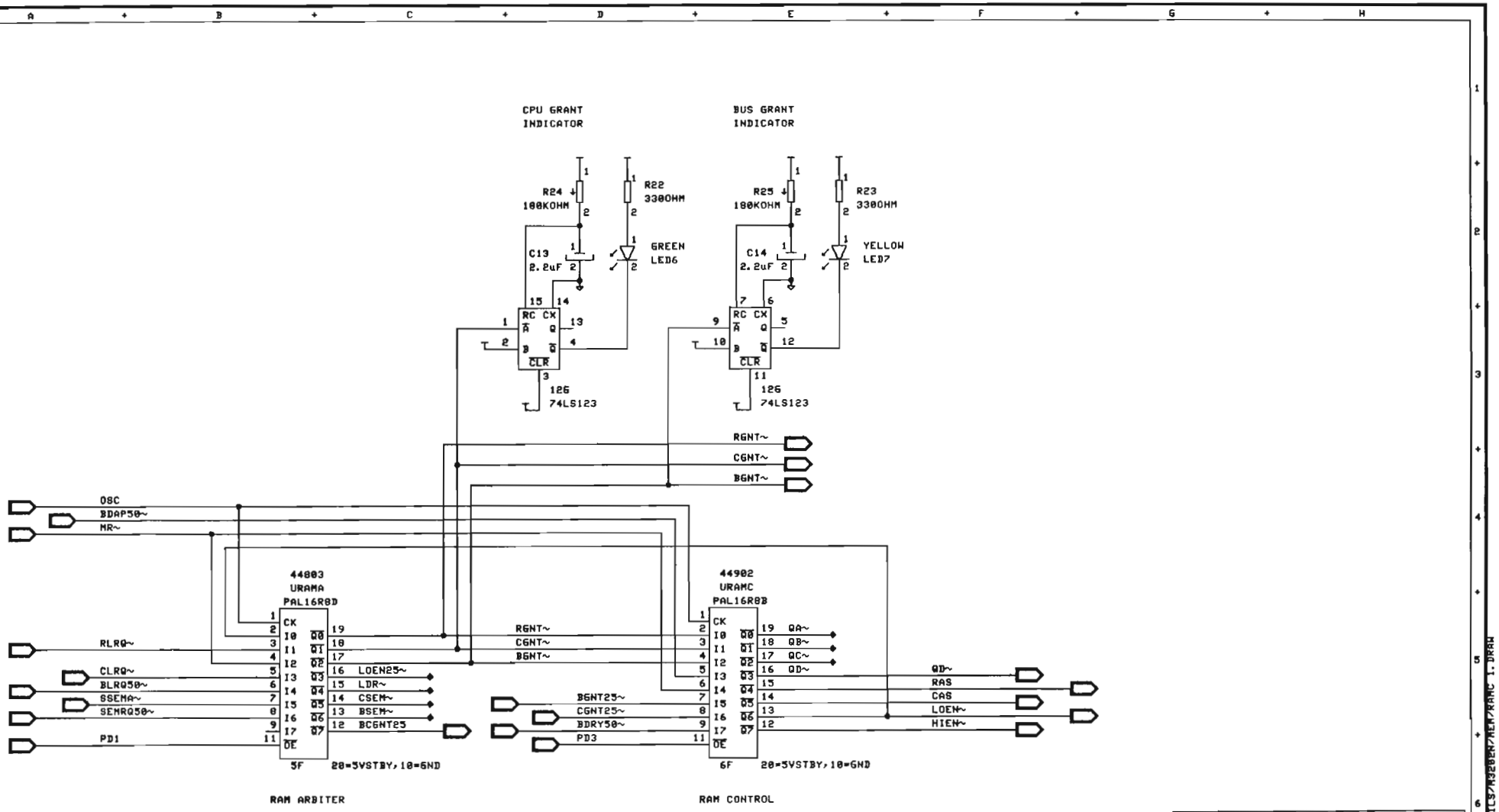

Scanned by Jonny Oddene for Sintran Data © 2024