USER MANUAL

Operation and display instructions

Start-on and shutdown operation

Boot: After wiring, press the white button on the right side of the display screen for 1~2 seconds to control the protection plate

Shutdown: In the boot state, long press the white button on the right side of the display screen for about 5 seconds to control the protection plate shutdown

Display the content description

Area 1: The fault code shows that when the icon is lit, the number displayed below is the fault code, and the current fault code is 8. If there are multiple fault information, it will scroll through. The fault code is shown in the comparison table below.

Fault code	The alarm content	Fault code	The alarm content
1	Single unit overrelease alarm	6	Short circuit alarm
2	Single-unit overcharge alarm	7	Internal communication abnormal alarm
3	Overflow alarm	8	The balance line has too large resistance to alarm
4	The MOS overtemperature alarm	9	Drop string
5	Battery overtemperature alarm		

Area 2: it is often indicated that when the icon is lit, there is an abnormal warning.

Area 3: Power display area, current display value of 88%.

Area 4: the charge-discharge current shows, the left "-" indicates the negative value of the discharge current; if not "-", the current is positive, and the current is the charging current.

Area 5: Total battery voltage display.

Display display logic

To reduce the power consumption, the following logic is specifically defined:

- Static: no current, no operation button, charging, after 10 seconds;
- Discharge: when the discharge current is greater than 0, the display screen is always bright;
- Key: When the display screen is pressed, the display screen is switched to the state, if the key is pressed, the key is pressed

After the screen; if the key is pressed, the screen will shine after the button;

MuscleGrid Smart Battery

with active balancer

JK-Energy Storage Series BMS Product Specification

Version: 15.4.1

1.Product Overview

BMS Overview

Lithium battery intelligent protection board is a management system tailored for large capacity series lithium battery pack, with voltage acquisition, high current active balancing, overcharge over pass temperature protection, coulomb meter, Bluetooth communication, host computer monitoring and other functions. Can be applied to lithium iron phosphate, ternary lithium battery type.

The protection board relies on the energy transfer active balancing technology with independent intellectual property rights, which can achieve A maximum continuous 1A balance current. The high current active equalization technology can ensure the consistency of the battery to the greatest extent, improve the battery range and delay the aging of the battery.

The protection board has a mobile APP supporting Android and IOS operating systems. The APP can be connected to the protection board through the Bluetooth of the mobile phone to check the working status of the battery, modify the working parameters of the protection board, control the charge and discharge switch, and so on. The protection board has small size, simple operation and full functions, and can be widely used in the battery PACK of high-power energy storage, base station backup power supply, solar power station and other products.

Functional characteristics

- LED Bluetooth status indicator
- APP Bluetooth remote operation
- Battery capacity calculation
- Supports PC operations
- High precision voltage acquisition (±3mV)
- High precision current acquisition
- Support information screen display
- Accurate time logging
- Support RS485 communication
- Support CAN communication
- Support heating function
- Alarm dry contact function
- Charge overcurrent protection
- Charge overvoltage protection
- Charge over temperature protection
- Low temperature protection during charge
- Discharge overcurrent protection
- Discharge undervoltage protection
- Discharge over temperature protection
- Short circuit protection
- Battery parallel current limiting function

Structural block diagram

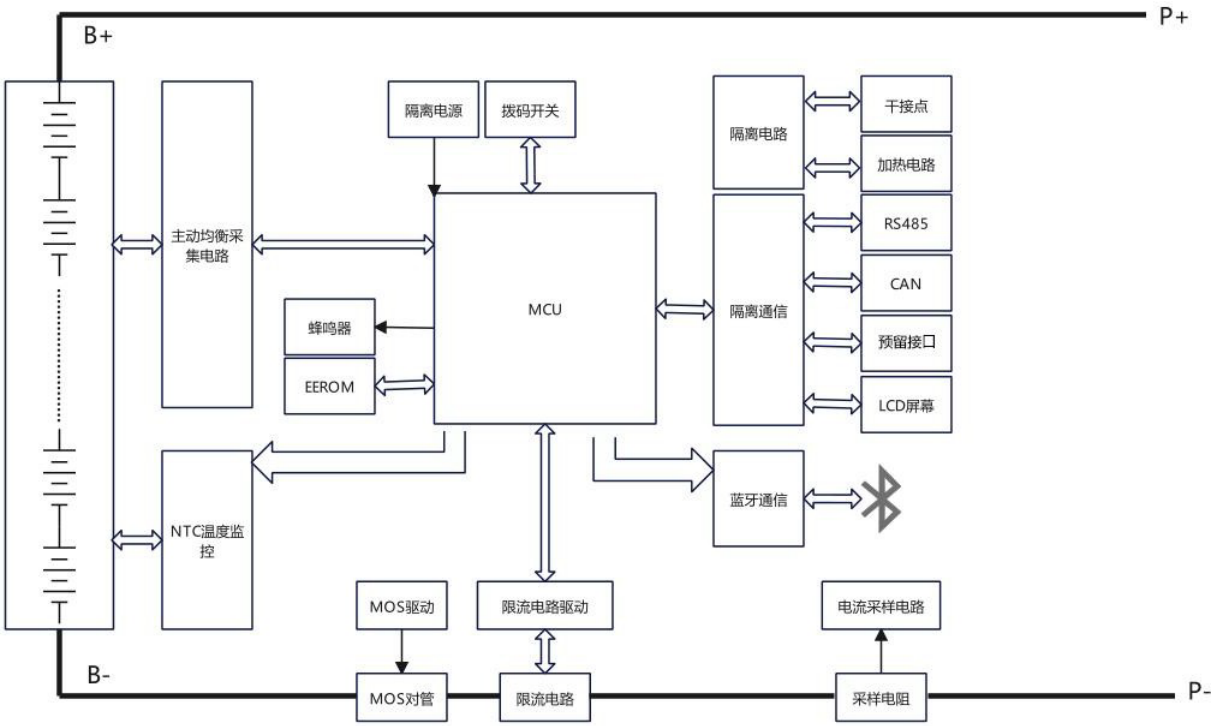

JK-PB1A15-16S10P structure block diagram

2. Product selection guide

Product function configuration table

(Product specification)	JK-PB1A15-16S-10P		
(Serial number)	（Function）	（Configuration）	
1	(Active equalizing current	15S or 16S	1A
		8S	
2	(Bluetooth function)	(Standard option)	
3	(NTC quantity)	(1 built-in, 4 external)	
4	RS485	(Two channels are standard)	
5	CAN	(Standard option)	
6	(Display interface)	(Standard option)	
7	(Heating function)	(Standard option)	
8	(Dry contact function)	(Two channels are standard)	
9	(Charging overvoltage, overcurrent protection)	(Standard option)	
10	(Discharge under voltage, over current protection)	(Standard option)	
11	(Short circuit protection)	(Standard option)	
12	(Battery parallel current limiting function)	(Standard option)	
13	(Maximum continuous current)	15S, 16S, 8S	100A

3. Function introduction and usage instructions

Active equalization

The protection board adopts active equalization technology, and the principle of equalization is to transfer the energy of the high-voltage cell to the low-voltage cell, and realize the energy transfer through the medium of the protection board. Before using the balancing function, users need to set the basic parameters of the battery and download the extreme space BMS-APP. After downloading, set the battery type on the parameter setting page of the extreme space APP. For default parameters, see Chapter 4.After setting the battery type, set basic battery parameters in common Settings, including the number of cells, battery capacity, trigger equalization differential pressure (the default value can be retained), voltage calibration, and current calibration.

Users can set the balance trigger pressure difference (mV) in the parameter setting of the APP. When the balance is turned on, the balance will be turned on automatically when the pressure difference of any two strings of batteries in the battery pack is greater than the set value, and the balance will be turned off when the pressure difference is less than the set value. The default balance current is 1A/2A. Users can adjust the balance current according to their own battery capacity. It is recommended that the balance current not exceed 0.2C of the battery capacity (C). If you do not need the balancing function, you can set the balancing switch to off in the BMS control page of the APP.

3.1. Heating function

The protection plate comes standard with heating function. The resistance heater or heating film is used to heat the battery at low temperature to avoid the failure of charging and discharging due to the decrease of battery activity caused by low temperature. The designed heating current is 4A. This function allows users to switch operations in the BMS control page of the extreme space APP according to their actual temperature. At the same time, it is recommended to series a temperature control switch in the heating circuit as a secondary protection to prevent thermal runaway in extreme cases. You are advised to select a normally closed temperature switch of 45 ° C to 65 ° C. When the temperature reaches the threshold of the temperature switch, the temperature switch is turned off and the heating circuit is cut off to prevent further heating.

3.2. Dry contact function

The protection board is equipped with two dry contacts to control external devices such as alarms and fans. When the BMS detects that the battery is in overtemperature, overcharge, or overdischarge state, the alarm interface can switch the status of the dry contact to drive the buzzer to alarm or drive the fan to cool down. You can select two trigger conditions based on your requirements. After switching the trigger alarm conditions, users need to set the conditions according to their own needs.

3.3. Charge overvoltage protection and recovery

The protection board is equipped with charge overvoltage protection as standard. Users can set the single overcharge protection voltage and single overcharge recovery voltage in the parameter setting page of the APP. When any string of batteries is overvoltage during battery charging, the protection board will turn off the charging to protect the battery. To prevent the battery from overcharging and damaging the cell.

3.4. Discharge undervoltage protection and recovery

The protection board is equipped with discharge undervoltage protection function as standard. Users can set battery undervoltage protection voltage (V), battery undervoltage recovery voltage (V) and automatic shutdown voltage (V) in the parameter setting page of the Extreme Air APP according to their own battery type. When the protection board is in the discharge state, when the voltage of any string of batteries is lower than the set undervoltage protection voltage value, the protection board triggers the undervoltage protection and closes the discharge at the same time to protect the battery cell and prevent overdischarge from damaging the battery cell. When the battery is charged until the voltage of all individual cells is higher than the undervoltage recovery voltage, the undervoltage protection release will turn on the discharge again. When the voltage of any string of batteries is lower than the automatic shutdown voltage, the protection board will automatically shut down to protect the battery.

3.5. Charge overcurrent protection and recovery

The protection board is equipped with the charging overcurrent protection function as standard. Users can set the continuous charging current (A), charging overcurrent delay (S) and charging overcurrent release (S) in the parameter setting page of the extreme Air APP according to their own battery capacity and the output current of the charger. When the charging current is greater than the set continuous charging current, the charging protection will

be triggered after the set charging overcurrent delay time, and the protection board will close the charging, and the protection board will open the charging again after the charging overcurrent release time.

3.6. Discharge overcurrent protection and recovery

The protection board is equipped with the discharge overcurrent protection function as standard. Users can set the continuous discharge current (A), discharge overcurrent delay (S) and discharge overcurrent release (S) in the parameter setting page of the extreme Air APP according to their own battery capacity and load output current. When the discharge current is greater than the set continuous discharge current, the discharge overcurrent protection is triggered after the set discharge overcurrent delay time, and the protection board closes the discharge. After the discharge overcurrent release time, the protection board starts the discharge again.

3.7. Over temperature protection and recovery

The protection board is equipped with charge and discharge overtemperature protection function as standard. Users can set charge overtemperature protection (℃), charge overtemperature recovery (℃), discharge overtemperature protection (℃), and discharge overtemperature recovery (℃) on the parameter setting page of the APP according to their own needs. When the temperature data collected by the protection board is higher than the set charge overtemperature protection value, the protection board shuts down the charging, and turns on the charging again when the temperature is lower than the set charge overtemperature recovery value. The same applies to the discharge overtemperature protection and recovery.

3.8. Low temperature protection and recovery

The protection board is equipped with charging low temperature protection function as standard. Users can set charging low temperature protection (℃) and charging low temperature recovery (℃) in the parameter setting page of the polar Air APP according to their own needs. When the temperature data collected by the protection board is lower than the set charging low temperature protection value, the protection board closes the charging, and turns on the charging again when the temperature returns to higher than the set charging low temperature recovery value. It is recommended that users in extremely cold areas in winter choose the heating function to better protect the battery cell.

3.9. Short circuit protection and recovery

The protection board is equipped with the short circuit protection function as standard. The user does not need to set the current that triggers the short circuit protection by himself. If necessary, the user can set the short circuit protection delay (us) and short circuit protection recovery time (S) on the parameter setting page of the Extreme Air

APP. When the user connects the charger for the first time to charge, if the charging short circuit protection is triggered after the external line is correctly connected in the BMS control page, the short circuit protection delay can be increased. The cause of the protection is that the peak current of the charger is too large when the charger is turned on and output. In this case, the short circuit protection is lifted after the short circuit protection recovery time, and the protection board is turned on and charged. When the user is connected to the load for the first time, the discharge short-circuit protection occurs, and the short-circuit protection delay can be increased to ensure that there is no short circuit in the external wiring. Because the capacitance inside some loads is large, the opening instantaneous current may be too large, which may trigger the short-circuit protection. In this case, the short-circuit protection is removed after the short-circuit protection recovery time, and the protection board is opened and discharged.

3.10. Intelligent sleep

The protection board is equipped with intelligent sleep function as standard, and users can choose to open or close the BMS control page of the extreme space APP according to their own needs. The purpose of this function is to close the protection board when the protection board is in standby state (the charging and discharging current is less than 1A for 26 consecutive hours) to reduce the energy consumption of the protection board itself to the battery. When the user needs to activate it again, the button can be activated or the charger can be activated.\

3.11. Communication function

The protection board is equipped with CAN and RS485 communications. The default communication rate of CAN communication is 250K. Users can select the corresponding protocol in the extreme space APP according to their inverter brand and specific specifications. At the same time, there are two RS45 communication interfaces, among which RS485-1 is used for communication with inverters and other Settings, and users can choose the corresponding protocol in the extreme space APP according to their own inverter brand and specific specifications. RS485-2 Parallel output Two ports are used to connect battery packs in parallel to the upper computer to view battery string information. The default baud rate is 115200. The protection board can set the communication address by setting the DIP switch, and query the data of all battery packs through the upper polling. The address range is 0 to 15.

3.12. Charge current limiting function

The protection board is equipped with the charging current limiting function as standard. Users can set the continuous charging current (A), charging overcurrent delay (S) and charging overcurrent release time (S) in the extreme space APP according to their own battery capacity and charging current. When the battery is charged overcurrent, the current limiting function is started, and the charging current is constant at about 10A to protect the battery.

3.13. This section describes the functions of the interface

Protection board Factory standard interface board for users to use LED indicator, reset switch, dip switch, dry contact, communication and other functions. The LED indicator can help the user judge the current BMS working status and the remaining battery power; The reset button can be pressed to reset the BMS when the user fails to use the BMS. The dip switch can be used to set the address when the BMS is used in parallel, and supports a total of 16 addresses from 0 to 15. Dry contact user control of external devices such as alarms and fans; CAN and RS485-1 are used for communication between BMS and inverter. RS485-2 is used to connect battery packs in parallel and communicate with the upper computer, The panel interface is described as follows (see the attachment for details).

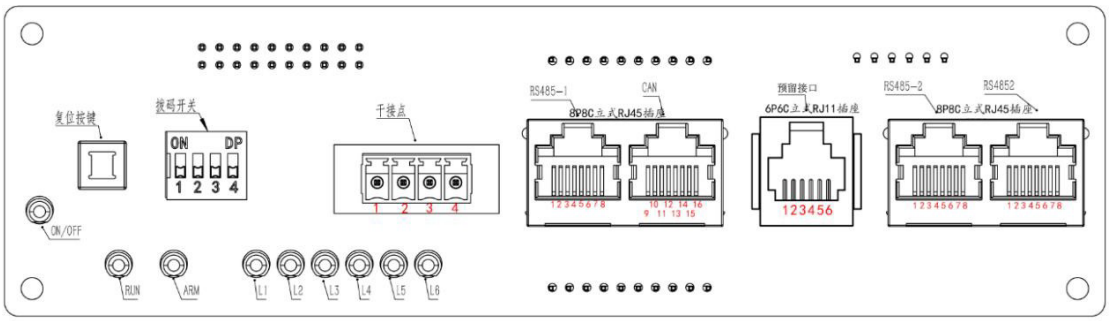

Panel interface diagram

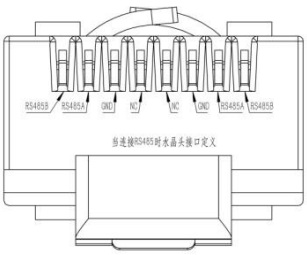

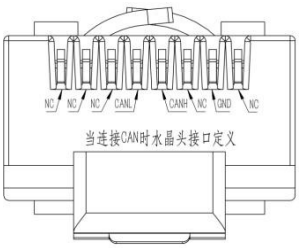

4. Main parameter

4.1. Basic parameter

(Serial number)	(Project)	(argument)		(Unit)
1	(Supply voltage)	20-70		V
2	(Standby power consumption)	12		mW
3	(Operating power consumption)	1100		mW
4	(Operating temperature)	-30-70		℃
5	(Maximum number of collection strings)	16		串（S）
6	(Maximum balancing current)	1		A
		2		
7	(Maximum charging current)	10P	100	A
		15P	150	
		20P	200	
8	(Maximum discharge current)	10P	100	A
		15P	150	
		20P	200	
9	(Maximum instantaneous current)	10P	200	A
		15P	300	
		20P	400	
10	(Maximum internal loop resistance)	10P	1	mΩ
		15P	0.45	
		20P	0.35	
11	(Protective plate size)	300*100*18		mm
12	(Finished weight)	1000		g

4.2. Default parameters

NUM	PARA	LI-ION	LIFEPO4	LTO	(unit)
1	(balancing initial voltage)	3	3	2	V
2	(Maximum balancing current)	1	1	1	A
		2	2	2	A
3	(Unit overcharge voltage)	4.2	3.6	2.7	V
4	(Single overcharge protection recovery)	4.17	3.54	2.64	V
5	(Monomer undervoltage protection)	2.82	2.6	1.8	V
6	(Single undervoltage protection recovery)	2.85	2.65	1.85	V
7	(Automatic shutdown voltage)	2.8	2.5	1.7	V
8	SOC-0% (SOC-0% voltage)	2.9	2.6	1.85	V
9	SOC-100% (SOC-100% voltage)	4.18	3.5	2.65	V
10	(Trigger balancing differential pressure)	0.01	0.01	0.01	V
11	(Charging overcurrent protection delay)	3	3	3	(S)
12	(Charge overcurrent protection release time)	60	60	60	(S)
13	(Discharge overcurrent protection delay)	300	300	300	(S)
14	(Discharge overcurrent protection release time)	60	60	60	(S)

15	(Short-circuit protection delay)	1500	1500	1500	(uS)
16	(Short circuit protection release time)	60	60	60	秒 (S)
17	Charging overtemperature protection temperature	70	70	70	℃
18	(Charge overtemperature restore temperature)	60	60	60	℃
19	(Discharge overtemperature protection temperature)	70	70	70	℃
20	(Discharge overtemperature recovery temperature)	60	60	60	℃
21	(Charging low temperature protection temperature)	-20	-20	-20	℃
22	(Charge low temperature to restore temperature)	-10	-10	-10	℃
23	MOS (MOS Overtemperature protection temperature)	100	100	100	℃
24	MOS (MOS Overtemperature protection recovery temperature)	80	80	80	℃
25	(Device address)	0	0	0	/
26	(Discharge precharge time)	0	0	0	(S)

Interface board Interface definition)

Definition of a dry contact interface)		
Pin number	**Pin definition**	**remark**
1	COM1	
2	S1	
3	COM2	
4	S2	
CAN RS485-1 Interface definition of CAN and RS485-1		
Pin number	**Pin definition**	**remark**
1、8	RS485- B1	
2、7	RS485-A1	
3、6	GND	
4、5	NC	
9、10、11、14、16	NC	
12	CANL	
13	CANH	
15	GND	
Reserved interface definition		
Pin number	**Pin definition**	**remark**
1-6	NC	
RS485-2 definition of RS485-2		
Pin number	**Pin definition**	**remark**
1	RS485- B2	
2	RS485-A2	
3	GND	
4	NC	

5	NC	
6	GND	
7	RS485-A2	
8	RS485-B2	

（Dip switch Settings）

Address	**Dip switch position**			
	1	2	3	4
0	OFF	OFF	OFF	OFF
1	ON	OFF	OFF	OFF
2	OFF	ON	OFF	OFF
3	ON	ON	OFF	OFF
4	OFF	OFF	ON	OFF
5	ON	OFF	ON	OFF
6	OFF	ON	ON	OFF
7	ON	ON	ON	OFF
8	OFF	OFF	OFF	ON
9	ON	OFF	OFF	ON
10	OFF	ON	OFF	ON
11	ON	ON	OFF	ON
12	OFF	OFF	ON	ON
13	ON	OFF	ON	ON
14	OFF	ON	ON	ON
15	ON	ON	ON	ON
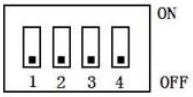				

LED description

（status）	(Normal, alarm, or Protection)	ON/OFF	RUN	ALM	L1	L2	L3	L4	L5	L6	(Instructions)
(Power Off)	(normal)	OFF									
Balance	（normal)	ON	(flicker)	OFF	(Battery based display)					OFF	
(charging)	(normal)	ON	(flicker)	OFF	(Battery based display)					OFF	
	(Over current, over temperature, over voltage, charging failure)	ON	(flic k er)	(flicker)	(Battery based display)					OFF	
(discharge)	（normal)	ON	(flic k er)	OFF	（Battery based display)					OFF	
	(Over current, over temperature, under voltage, discharge failure)	ON	(flic k er)	(flic k er)	(Battery based display)					OFF	
(Other alarm)	Password not changed \ short circuit \ temperature	ON	(flicker)	(flicker)	Battery based display					OFF	

	abnormal)						
Note: When the device address is set to 0, the last LED indicator L6 blinks. If the value is set to other values, the slave is off and blinks after the communication between the slave and the host is successful.							
Note: ON indicates that the LED is on,OFF indicates that the LED is off.							

（Power LED Description）

Status		**Charging**					**Discharge**				
Capacity indicator light		**L5**	**L4**	**L3**	**L2**	**L1**	**L5**	**L4**	**L3**	**L2**	**L1**
Electric quantity %	0~20%	OFF	OFF	OFF	OFF	ON	OFF	OFF	OFF	OFF	ON
	20~40%	OFF	OFF	OFF	ON	ON	OFF	OFF	OFF	ON	ON
	40~60%	OFF	OFF	ON	ON	ON	OFF	OFF	ON	ON	ON
	60~80%	OFF	ON	ON	ON	ON	OFF	ON	ON	ON	ON
	80~100%	ON	ON	ON	ON	ON	ON	ON	ON	ON	ON
Note: ON indicates that the LED is on, OFF indicates that the LED is off											

4.3. APP installation

Mobile APP matching the product can be obtained by scanning the QR code shown in Figure . Android Version 7 minimum is required for the Android APP.

Mobile APP link QR code

4.4. Device activation

Before starting the protection board, check whether the balance cable is properly connected and whether P- and B- are correctly connected. Check whether the protection board has been securely fixed with the battery core, and confirm that it is correct before you can switch on the protection board, otherwise it may cause serious consequences such as abnormal work and even burning.

After confirming the preceding operations, power on the protection board. The protection board has no power-on control switch, and is designed for charging activation mode (the charger voltage is 2V higher than the battery voltage), that is, after the battery assembly is completed, the charger needs to be connected to make the protection board work.

In addition to charging activation, the protection board also supports key activation and display activation. Users who choose the display screen and button only need to insert the cable into the display interface and press the button to activate.

For service support-

Email: Lithium@musclegrid.in
or service@musclegrid.in

Phone: 9999036254 or 8279619312