सी डैक
CDAC

WORK ORDER

CENTRE FOR DEVELOPMENT OF ADVANCED COMPUTING
Thiruvananthapuram

No: PEG 3543 Date: 04-12-2024 Previous WO Ref (if any):

Originating Group/Dept: PEG	Project Code: PEGSA
Receiving Group/Dept. : MODELSHOP	Project End Date (FC): NA
Priority: ~~Normal~~/~~Medium~~/High (√)	Product Description : Fabrication of Table
Material only request: Yes/~~No~~ (√)	Desired Date of Completion: 11-12-2024

Sl. No.	Part No.	Drawing Title/ Description (as applicable)	Qty	Remarks
1	-	Table	1	
2	-	Bakelite 600x700x8 mm	1	
		Material Only and Painting		

Deliver to:	Issued By	Recommended By (PL)	Authorized by (SH/GH)
	Signature C.Ramesh	Signature	Signature 4/12/24
	Name: RAMACHANDRAN C	Name: Vivek R S	Name: Jayan P.P

To be filled by Receiving Dept

Control No: 10253

Revision	Proposed Date of Completion accepted by Issuing dept.	Recorded by Issuing dept. (Signature)	Recorded by Receiving dept. (Signature)
Original			
01			
02			
03			

Remarks:

Recieved on 04.12.2024

Work was completed and delivered on:

Section Head/OIC: Signature:.....

Notes: 1. Signed PDF with ALL supporting documents/drawings, shall be forwarded by Group/Section Head to SH/OIC-MSS at modelshop@cdac.in
2. (√ - Tick appropriate)

Template No T1002, Rev 04

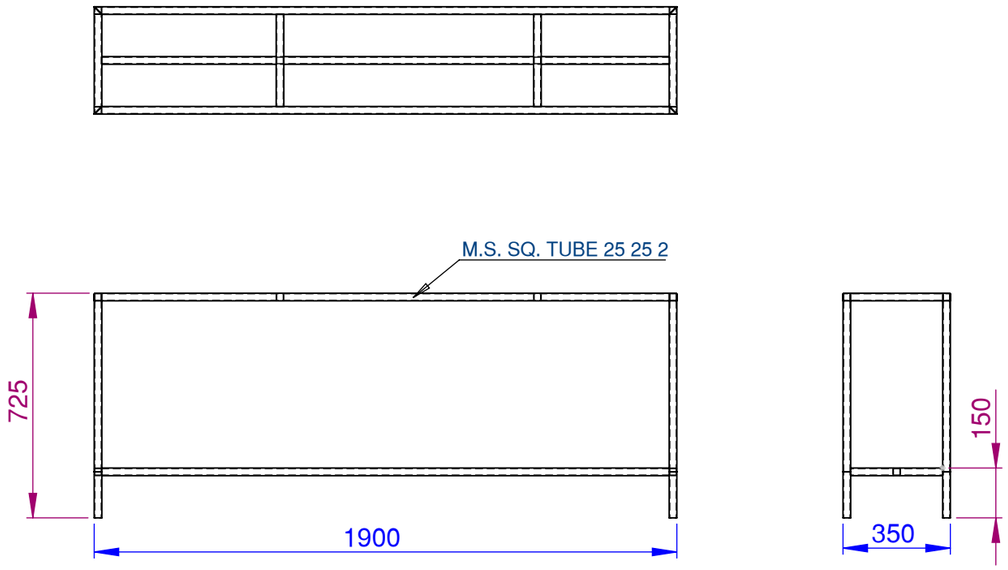

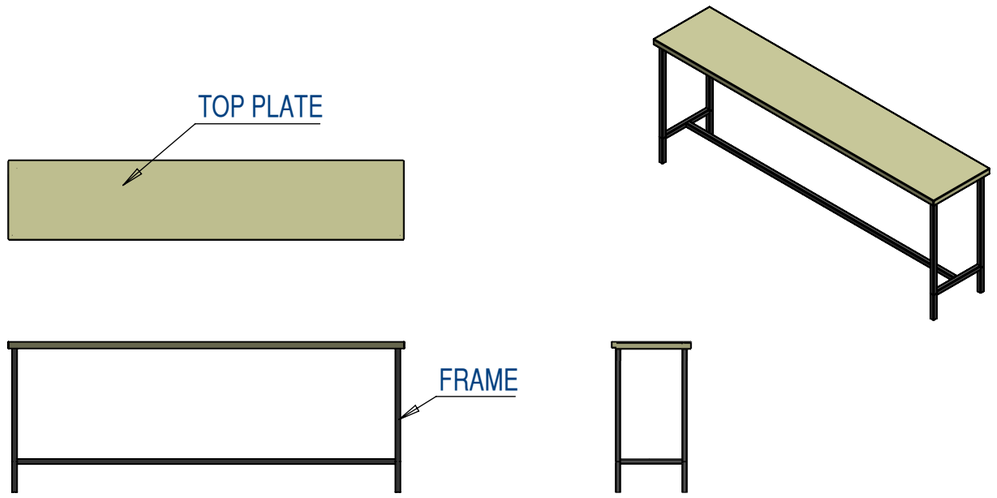

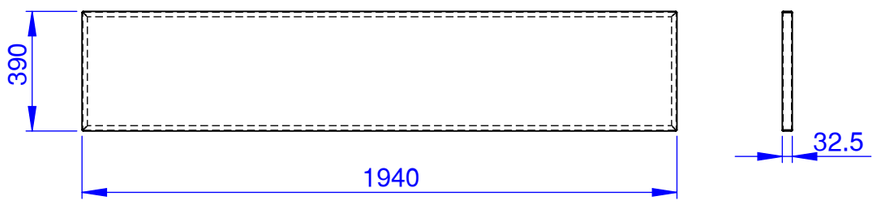

MATERIAL : 2 / 2.5mm ALUMINIUM

REV	DATE	CHANGE	ENGINEER	APPROVED	NUMBER	ITEM	QTY.
00	20.08.2024	ORIGINAL					1

MATERIAL	FINISH	PROJECTION	NEXT ASSEMBLY		
M.S. SQ TUBE 25 25 2 2.5 mm AL. SHEET	PAINTED		TOL GEN/ INTER AXIS IS:2102 MEDIUM	DIMENSION mm	SCALE NTS

DRAWN	CHECKED	APPROVED	Doc.Name	TABLE
DIVYAMOL S	RAMACHANDRAN C	VIVEK R S		
DATE 21.11.2024	DATE 21.11.2024	DATE 21.11.2024	Doc.No.	

सी डैक CDAC

Centre for Development of Advanced Computing
Thiruvananthapuram

PROJECT / PRODUCT CODE	SIZE	ISSUE
PEG SA	A3	
	NO.OF SHEETS	1 / 1

Template No. T0410 Rev 04