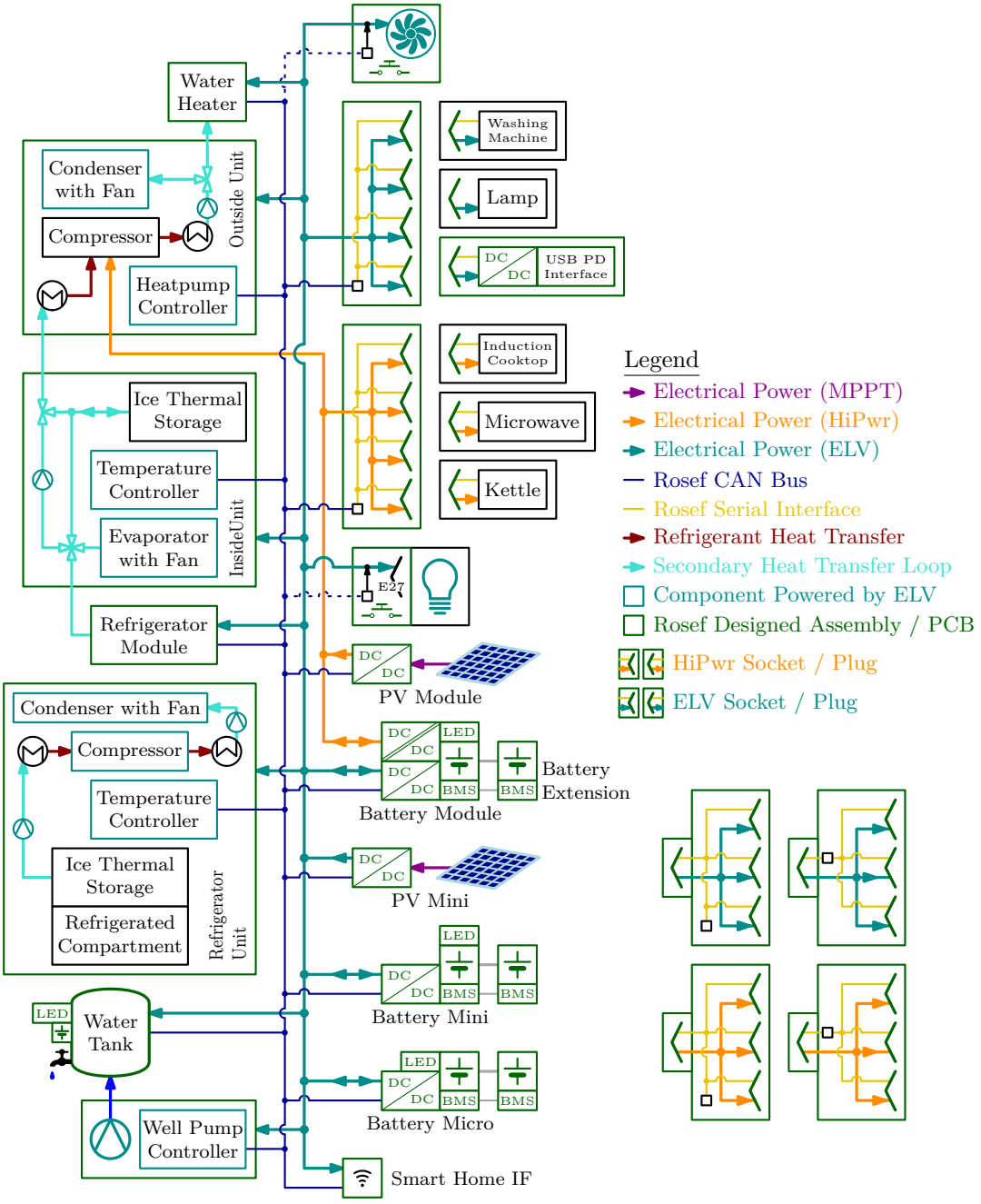
Water Heater
Condenser with Fan
Compressor
Heatpump Controller
Outside Unit
Washing Machine
Lamp
DC
DC
USB PD Interface
Induction Cooktop
Microwave
Kettle
Ice Thermal Storage
Temperature Controller
Evaporator with Fan
InsideUnit
E27
Refrigerator Module
DC
DC
PV Module
Condenser with Fan
Compressor
Temperature Controller
Ice Thermal Storage
Refrigerated Compartment
Refrigerator Unit
DC
LED
DC
DC
BMS
BMS
Battery Extension
Battery Module
DC
DC
PV Mini
LED
DC
DC
BMS
BMS
Battery Mini
LED
Water Tank
LED
DC
DC
BMS
BMS
Battery Micro
Well Pump Controller
Smart Home IF
Legend
Electrical Power (MPPT)
Electrical Power (HiPwr)
Electrical Power (ELV)
Rosef CAN Bus
Rosef Serial Interface
Refrigerant Heat Transfer
Secondary Heat Transfer Loop
Component Powered by ELV
Rosef Designed Assembly / PCB
HiPwr Socket / Plug
ELV Socket / Plug

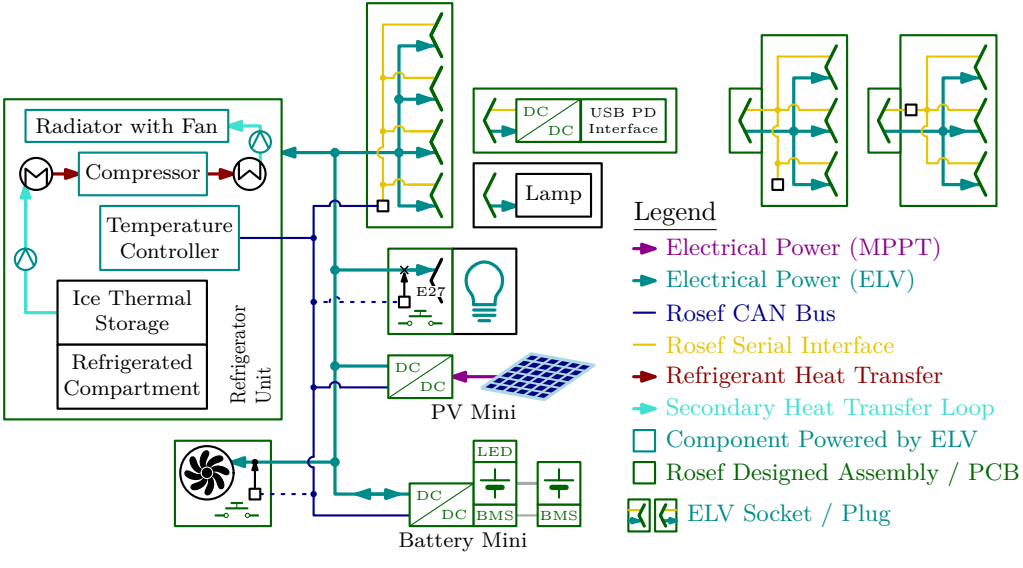
Radiator with Fan
Compressor
Temperature Controller
Ice Thermal Storage
Refrigerated Compartment
Refrigerator Unit
DC
DC
USB PD Interface
Lamp
E27
DC
DC
PV Mini
LED
DC
DC
BMS
BMS
Battery Mini
Legend
Electrical Power (MPPT)
Electrical Power (ELV)
Rosef CAN Bus
Rosef Serial Interface
Refrigerant Heat Transfer
Secondary Heat Transfer Loop
Component Powered by ELV
Rosef Designed Assembly / PCB
ELV Socket / Plug

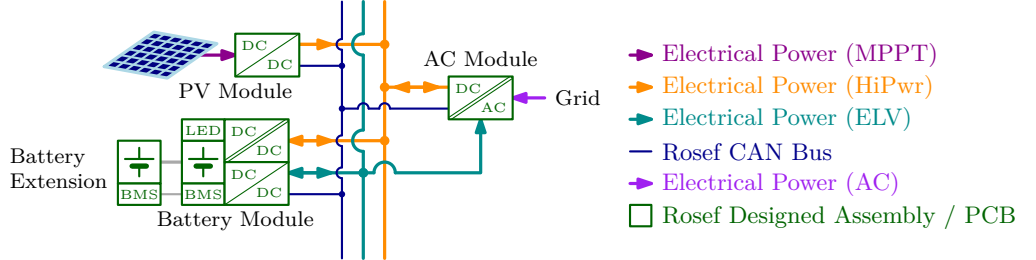
PV Module
DC
DC
AC Module
DC
AC
Grid
Battery Extension
BMS
BMS
LED
DC
DC
DC
DC
Battery Module
Electrical Power (MPPT)
Electrical Power (HiPwr)
Electrical Power (ELV)
Rosef CAN Bus
Electrical Power (AC)
Rosef Designed Assembly / PCB

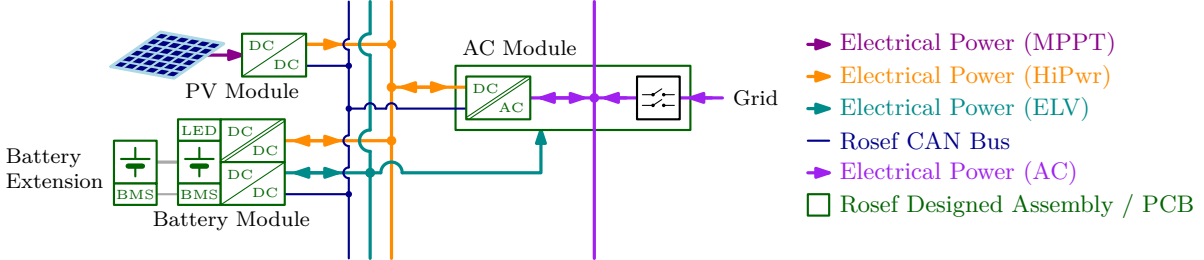
PV Module
DC
DC
AC Module
DC
AC
Grid
Battery Extension
BMS
LED
BMS
DC
DC
DC
DC
Battery Module
Electrical Power (MPPT)
Electrical Power (HiPwr)
Electrical Power (ELV)
Rosef CAN Bus
Electrical Power (AC)
Rosef Designed Assembly / PCB

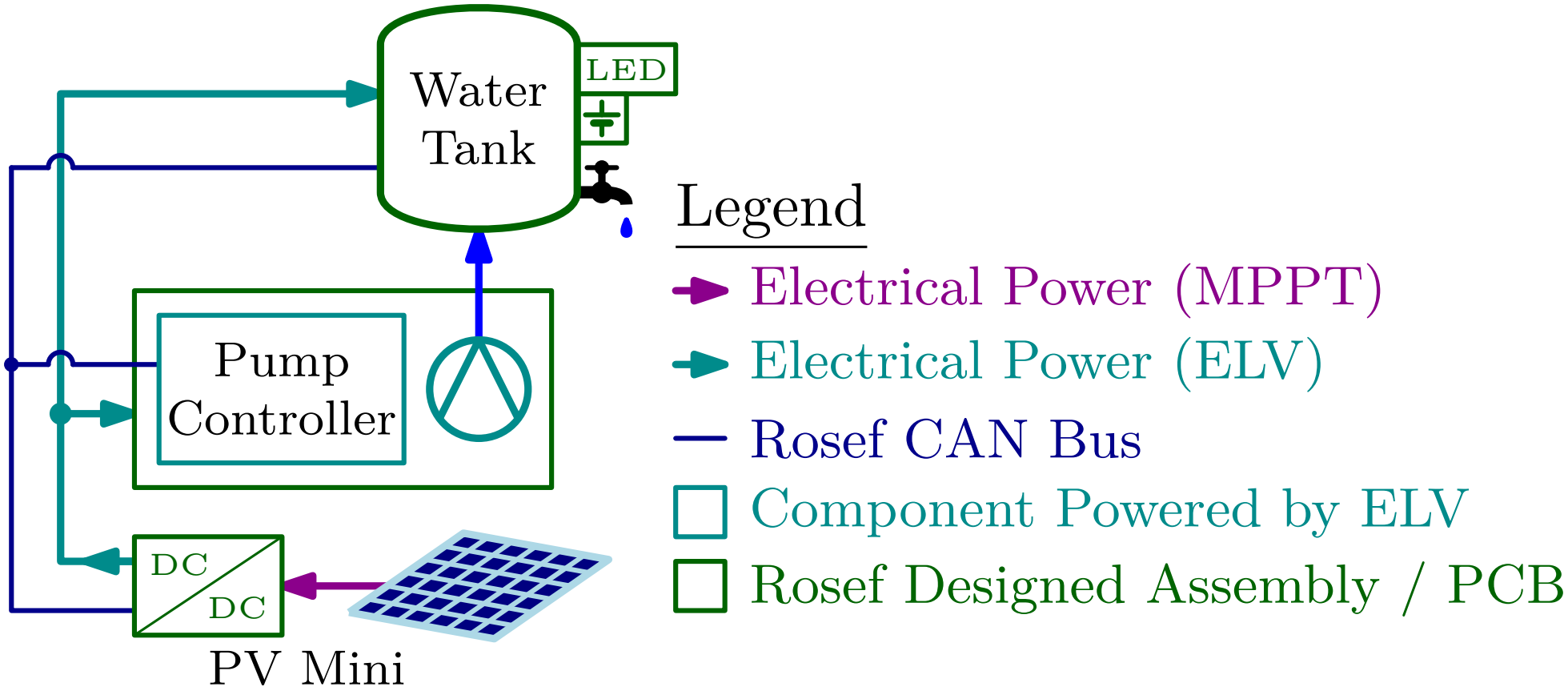
Water Tank
LED
Pump Controller
DC
DC
PV Mini
Legend
Electrical Power (MPPT)
Electrical Power (ELV)
Rosef CAN Bus
Component Powered by ELV
Rosef Designed Assembly / PCB

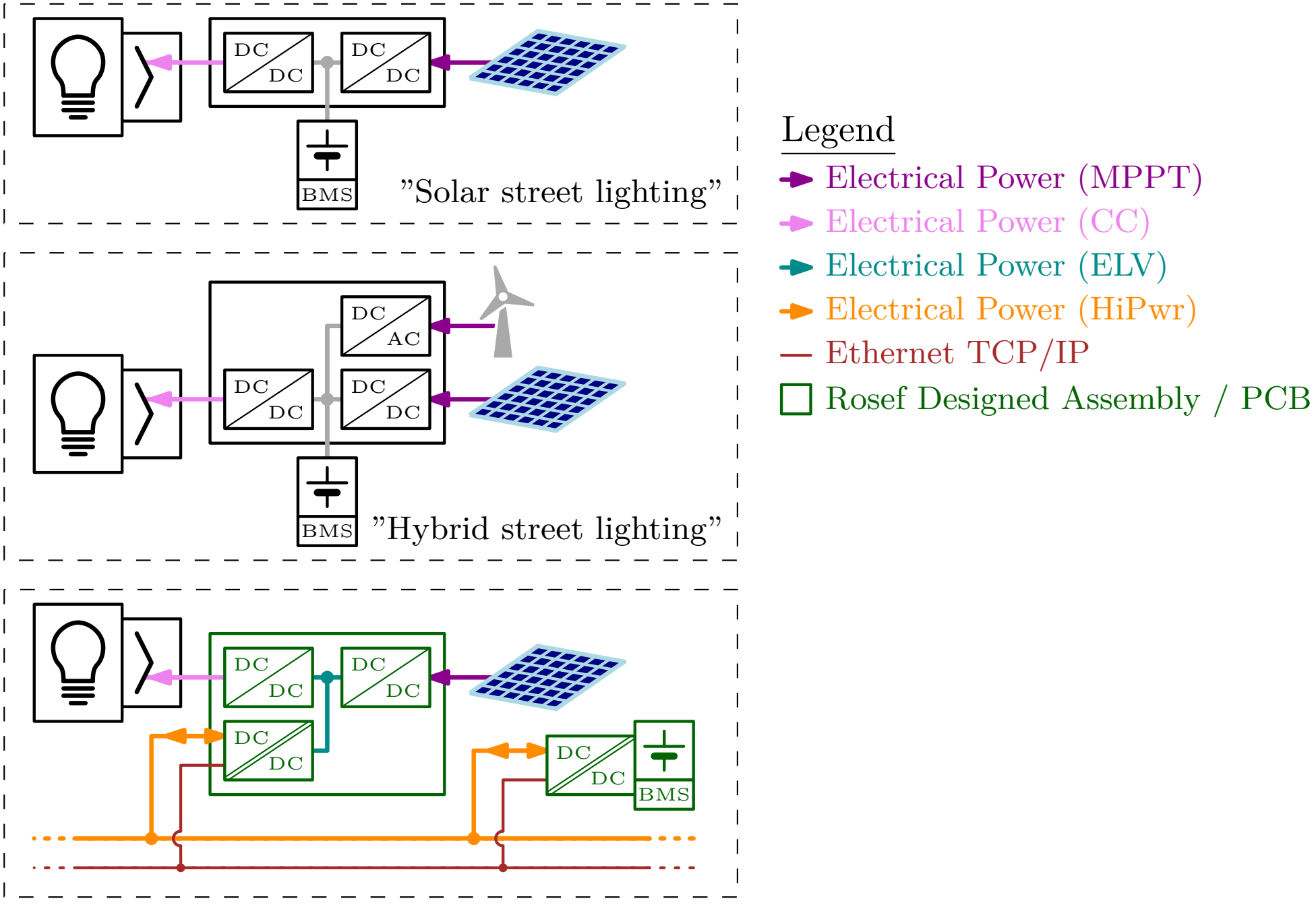
DC
DC
DC
DC
BMS
"Solar street lighting"
DC
AC
DC
DC
DC
DC
BMS
"Hybrid street lighting"
DC
DC
DC
DC
DC
DC
DC
DC
BMS
Legend
Electrical Power (MPPT)
Electrical Power (CC)
Electrical Power (ELV)
Electrical Power (HiPwr)
Ethernet TCP/IP
Rosef Designed Assembly / PCB

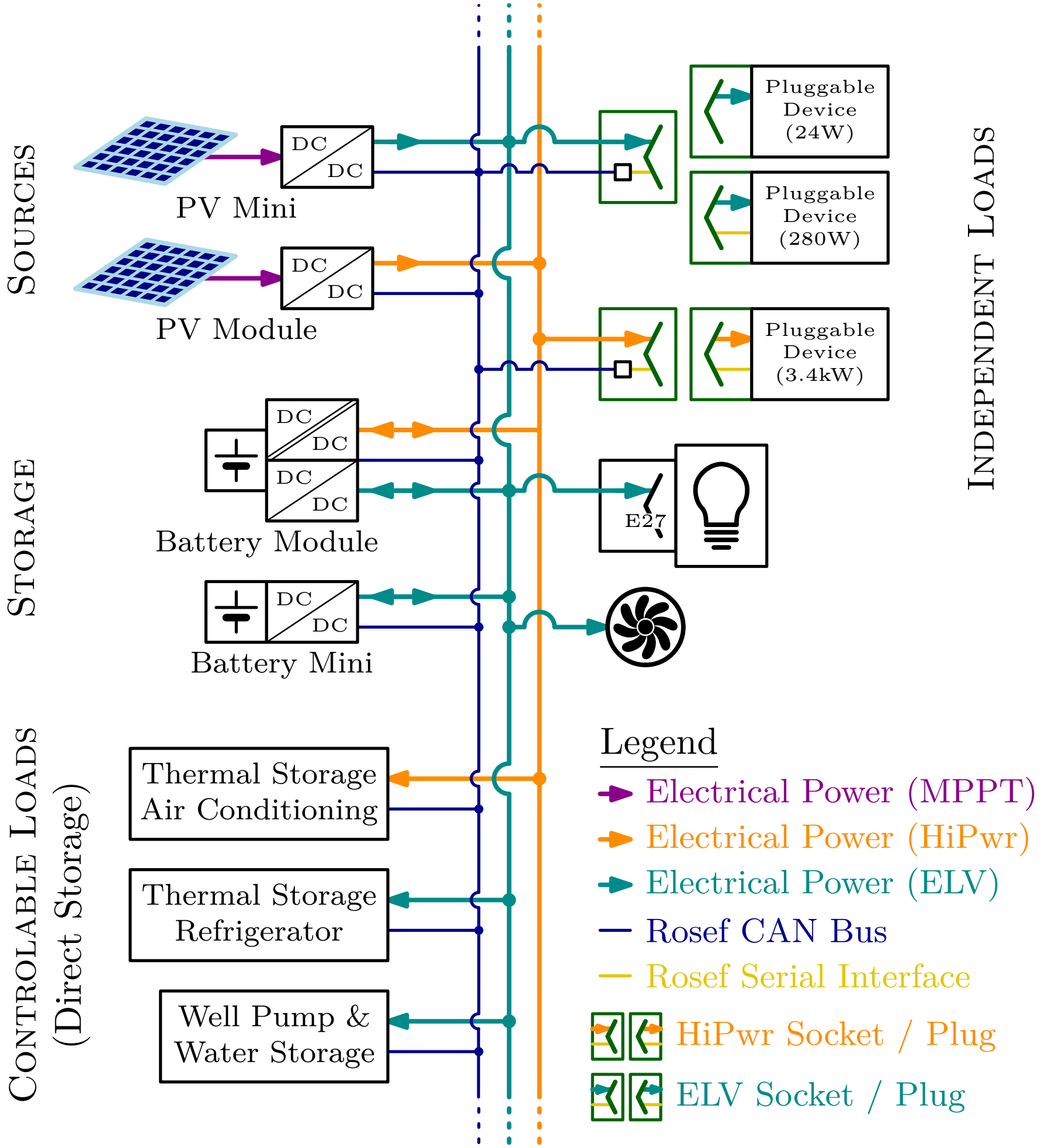
Sources
PV Mini
DC
DC
PV Module
DC
DC
Storage
Battery Module
DC
DC
DC
DC
Battery Mini
DC
DC
Controlable Loads
(Direct Storage)
Thermal Storage
Air Conditioning
Thermal Storage
Refrigerator
Well Pump &
Water Storage
Pluggable
Device
(24W)
Pluggable
Device
(280W)
Pluggable
Device
(3.4kW)
E27
Independent Loads
Legend
Electrical Power (MPPT)
Electrical Power (HiPwr)
Electrical Power (ELV)
Rosef CAN Bus
Rosef Serial Interface
HiPwr Socket / Plug
ELV Socket / Plug

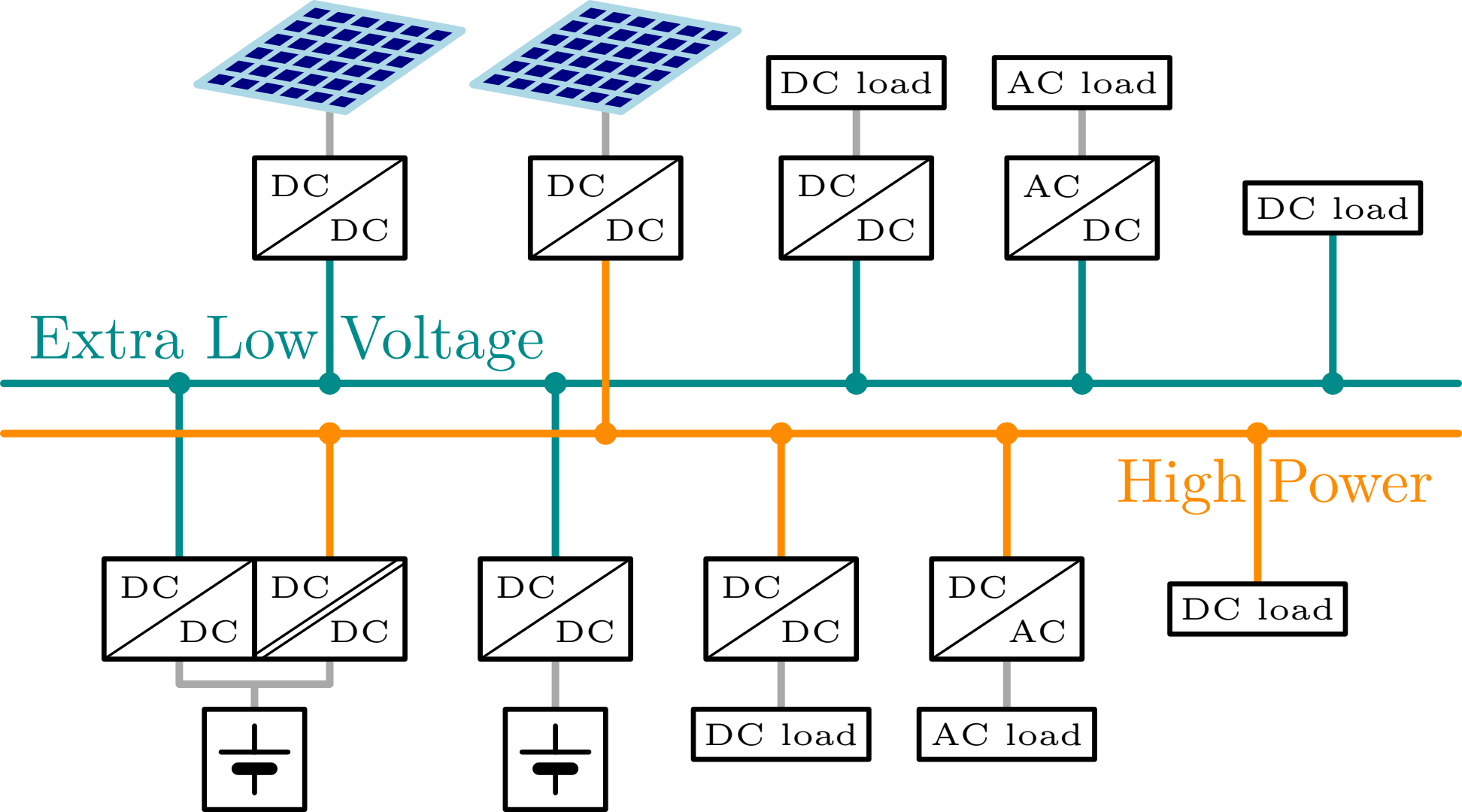
DC load
AC load
DC
DC
DC
DC
DC
DC
AC
DC
DC load
Extra Low Voltage
High Power
DC
DC
DC
DC
DC
DC
DC
DC
DC
AC
DC load
DC load
AC load

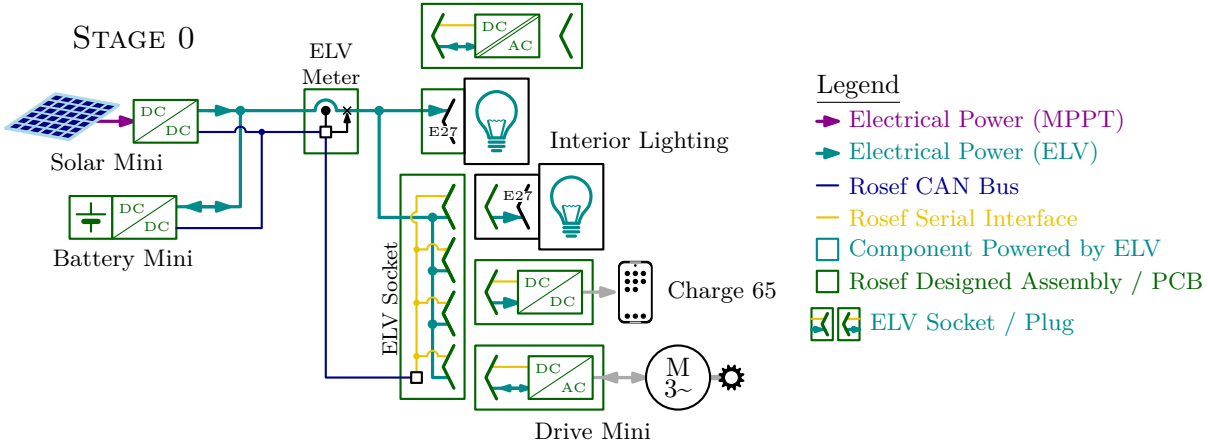
Stage 0
ELV
Meter
DC
AC
DC
DC
Solar Mini
DC
DC
Battery Mini
E27
Interior Lighting
E27
ELV Socket
DC
DC
Charge 65
DC
AC
M
3~
Drive Mini
Legend
Electrical Power (MPPT)
Electrical Power (ELV)
Rosef CAN Bus
Rosef Serial Interface
Component Powered by ELV
Rosef Designed Assembly / PCB
ELV Socket / Plug

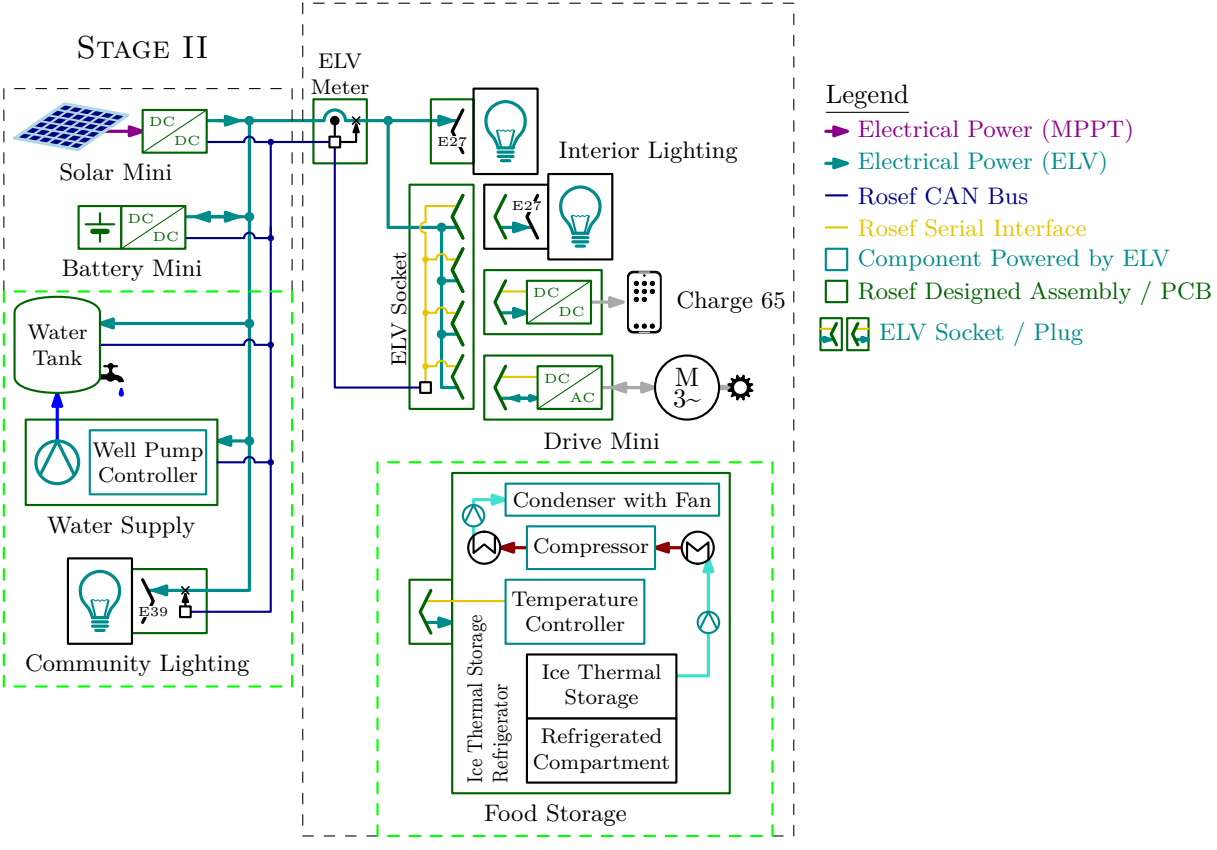
Stage II
ELV Meter
Solar Mini
DC DC
Battery Mini
Water Tank
Well Pump Controller
Water Supply
E39
Community Lighting
E27
Interior Lighting
ELV Socket
Charge 65
DC AC
M 3~
Drive Mini
Condenser with Fan
Compressor
Temperature Controller
Ice Thermal Storage
Refrigerated Compartment
Ice Thermal Storage Refrigerator
Food Storage
Legend
Electrical Power (MPPT)
Electrical Power (ELV)
Rosef CAN Bus
Rosef Serial Interface
Component Powered by ELV
Rosef Designed Assembly / PCB
ELV Socket / Plug

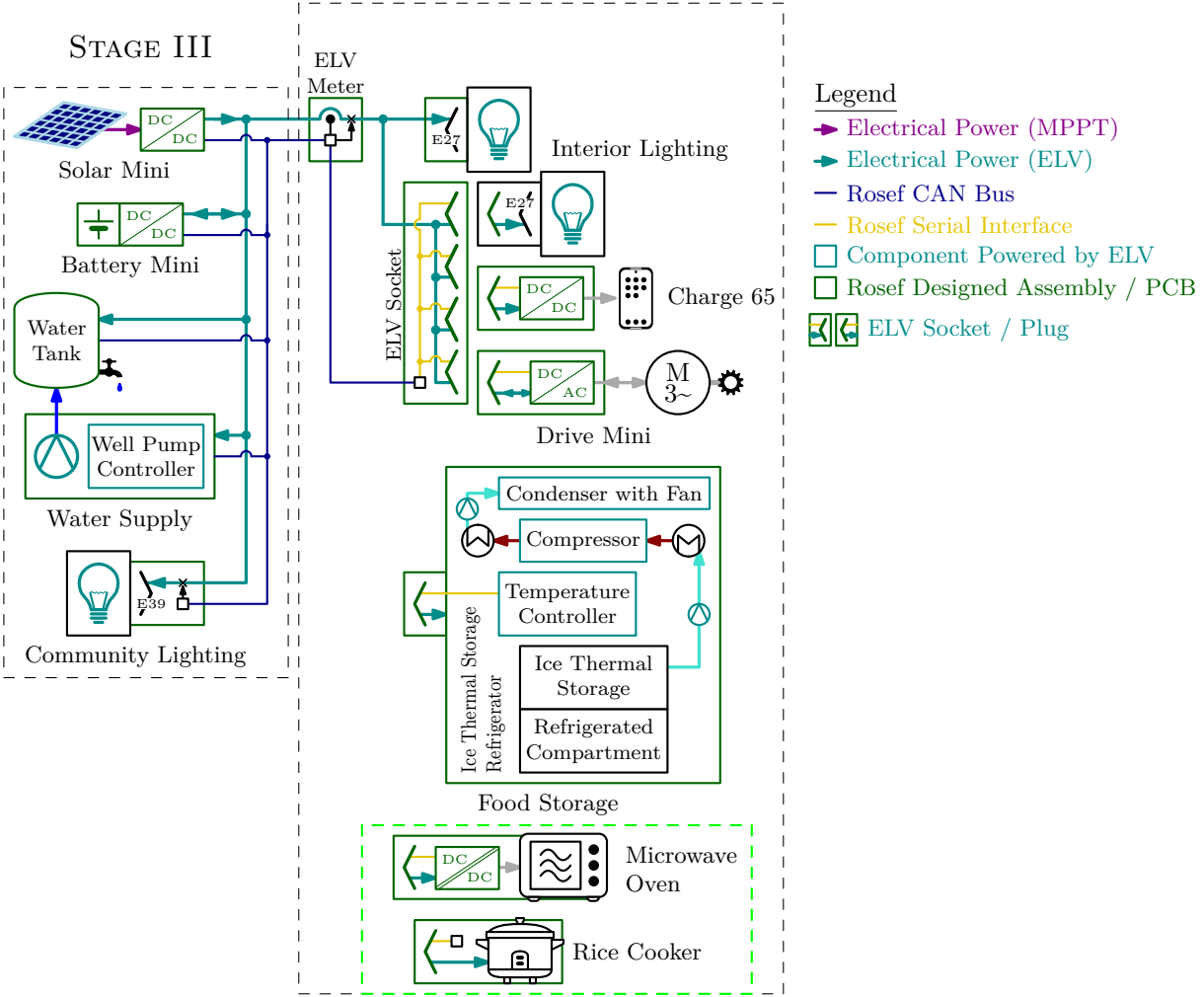
Stage III
ELV Meter
Solar Mini
DC DC
Battery Mini
Water Tank
Well Pump Controller
Water Supply
E39
Community Lighting
E27
Interior Lighting
ELV Socket
Charge 65
DC AC
M 3~
Drive Mini
Condenser with Fan
Compressor
Temperature Controller
Ice Thermal Storage
Refrigerated Compartment
Ice Thermal Storage Refrigerator
Food Storage
Microwave Oven
Rice Cooker
Legend
Electrical Power (MPPT)
Electrical Power (ELV)
Rosef CAN Bus
Rosef Serial Interface
Component Powered by ELV
Rosef Designed Assembly / PCB
ELV Socket / Plug

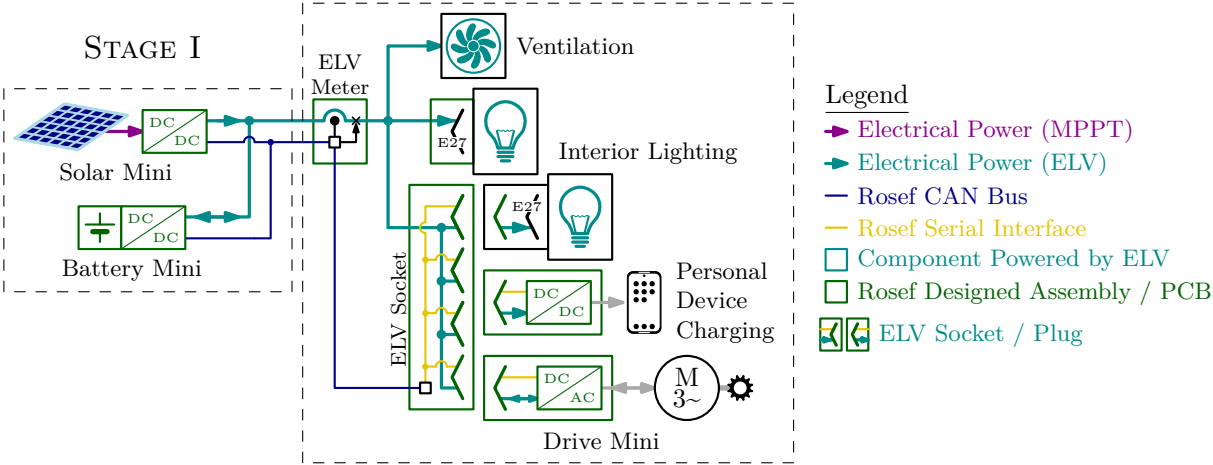
Stage I
Solar Mini
DC
DC
Battery Mini
ELV
Meter
Ventilation
E27
Interior Lighting
ELV Socket
Personal
Device
Charging
M
3~
Drive Mini
Legend
Electrical Power (MPPT)
Electrical Power (ELV)
Rosef CAN Bus
Rosef Serial Interface
Component Powered by ELV
Rosef Designed Assembly / PCB
ELV Socket / Plug

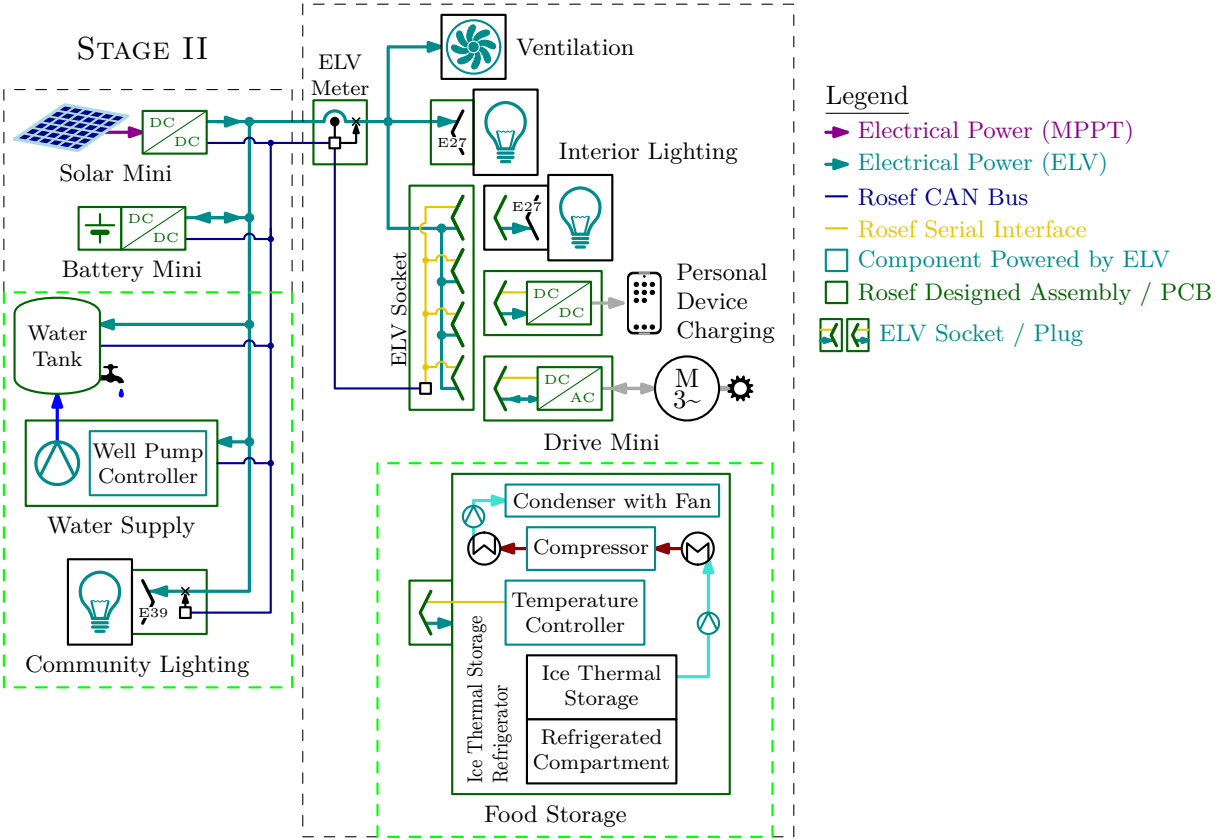
Stage II
ELV Meter
Ventilation
Solar Mini
DC DC
E27
Interior Lighting
Battery Mini
ELV Socket
Personal Device Charging
Water Tank
Drive Mini
DC AC
M 3~
Well Pump Controller
Water Supply
Condenser with Fan
Compressor
Temperature Controller
E39
Community Lighting
Ice Thermal Storage Refrigerator
Ice Thermal Storage
Refrigerated Compartment
Food Storage
Legend
Electrical Power (MPPT)
Electrical Power (ELV)
Rosef CAN Bus
Rosef Serial Interface
Component Powered by ELV
Rosef Designed Assembly / PCB
ELV Socket / Plug

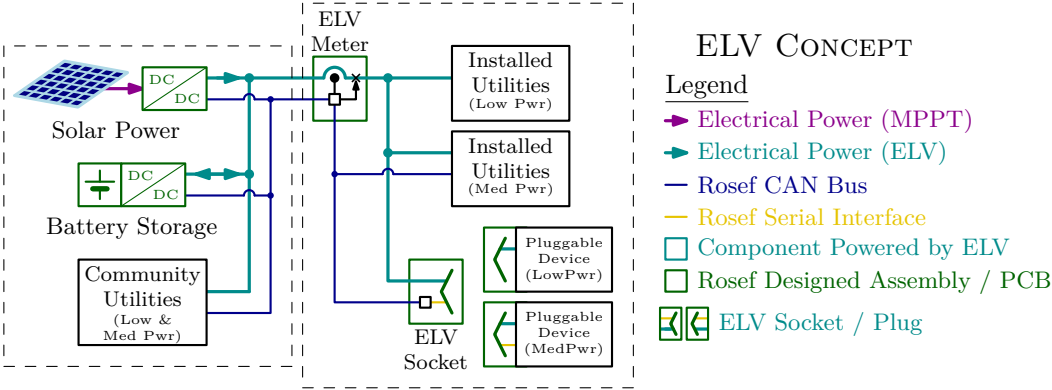
ELV Concept
Legend
Electrical Power (MPPT)
Electrical Power (ELV)
Rosef CAN Bus
Rosef Serial Interface
Component Powered by ELV
Rosef Designed Assembly / PCB
ELV Socket / Plug
ELV Meter
Solar Power
DC
DC
Battery Storage
Community Utilities (Low & Med Pwr)
Installed Utilities (Low Pwr)
Installed Utilities (Med Pwr)
Pluggable Device (LowPwr)
Pluggable Device (MedPwr)
ELV Socket

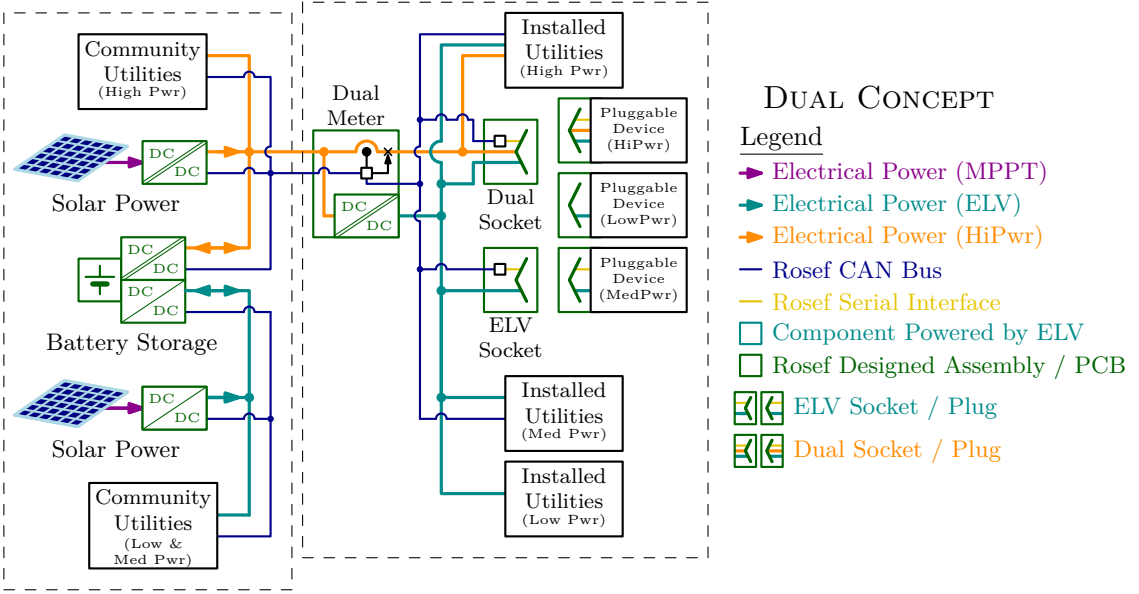
Dual Concept
Legend
Electrical Power (MPPT)
Electrical Power (ELV)
Electrical Power (HiPwr)
Rosef CAN Bus
Rosef Serial Interface
Component Powered by ELV
Rosef Designed Assembly / PCB
ELV Socket / Plug
Dual Socket / Plug
Community Utilities (High Pwr)
Solar Power
DC DC
Battery Storage
Solar Power
Community Utilities (Low & Med Pwr)
Dual Meter
Installed Utilities (High Pwr)
Dual Socket
ELV Socket
Pluggable Device (HiPwr)
Pluggable Device (LowPwr)
Pluggable Device (MedPwr)
Installed Utilities (Med Pwr)
Installed Utilities (Low Pwr)

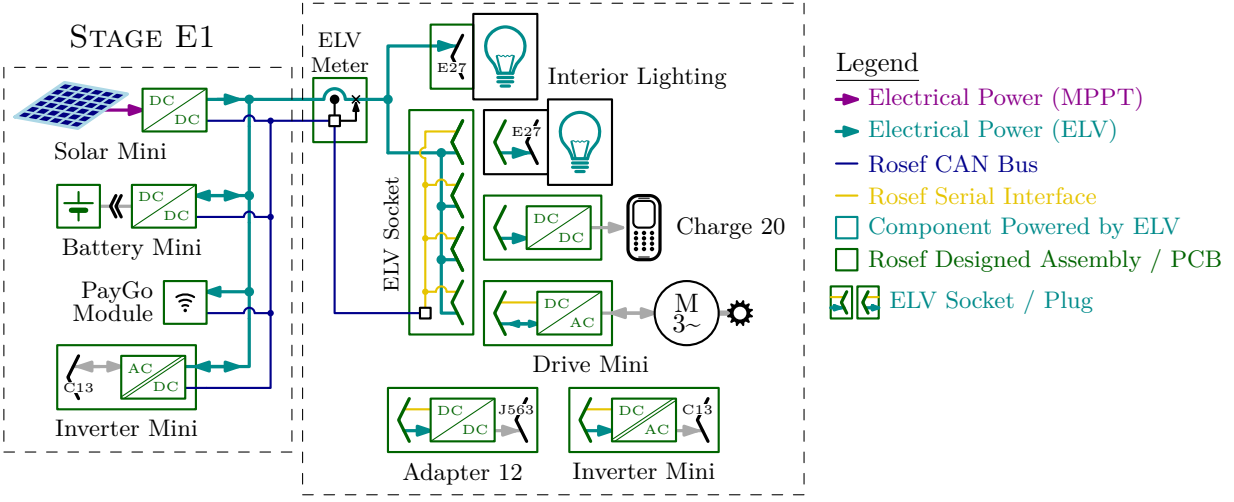
Stage E1
Solar Mini
DC
DC
Battery Mini
PayGo Module
C13
AC
DC
Inverter Mini
ELV Meter
ELV Socket
E27
Interior Lighting
Charge 20
Drive Mini
M
3~
J563
Adapter 12
Inverter Mini
Legend
Electrical Power (MPPT)
Electrical Power (ELV)
Rosef CAN Bus
Rosef Serial Interface
Component Powered by ELV
Rosef Designed Assembly / PCB
ELV Socket / Plug

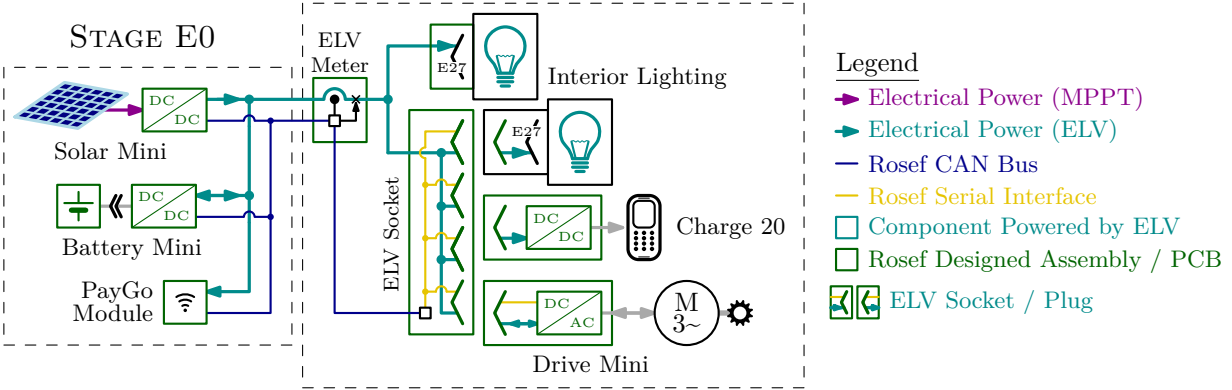
Stage E0
Solar Mini
DC
DC
Battery Mini
PayGo
Module
ELV
Meter
ELV Socket
E27
Interior Lighting
Charge 20
Drive Mini
DC
AC
M
3~
Legend
Electrical Power (MPPT)
Electrical Power (ELV)
Rosef CAN Bus
Rosef Serial Interface
Component Powered by ELV
Rosef Designed Assembly / PCB
ELV Socket / Plug