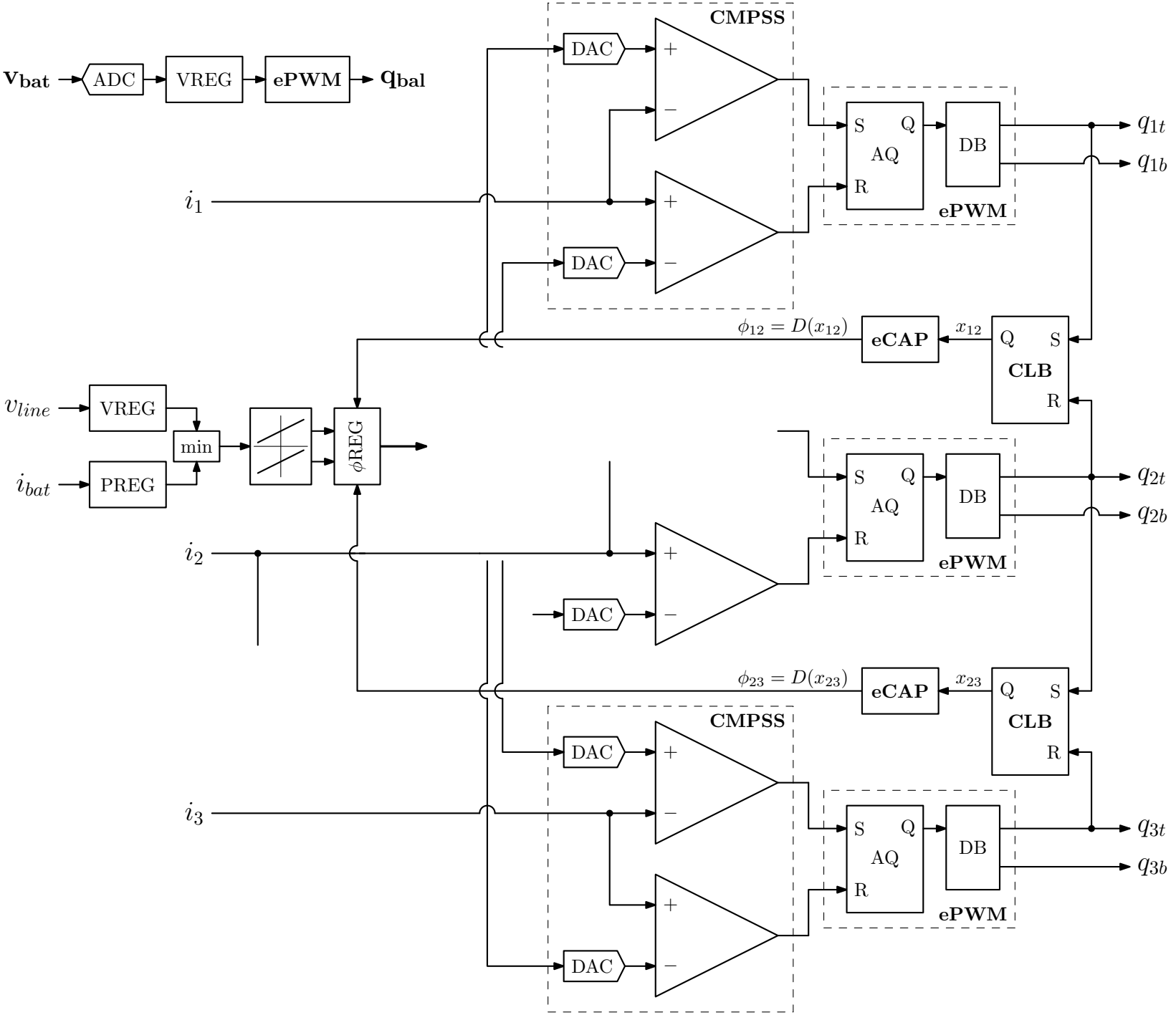
$\mathbf{v_{bat}}$
ADC
VREG
ePWM
$\mathbf{q_{bal}}$
CMPSS
DAC
+
−
S
Q
AQ
R
DB
ePWM
q_{1t}
q_{1b}
i_1
$\phi_{12} = D(x_{12})$
eCAP
x_{12}
CLB
v_{line}
i_{bat}
PREG
min
ϕREG
q_{2t}
q_{2b}
i_2
$\phi_{23} = D(x_{23})$
x_{23}
i_3
q_{3t}
q_{3b}

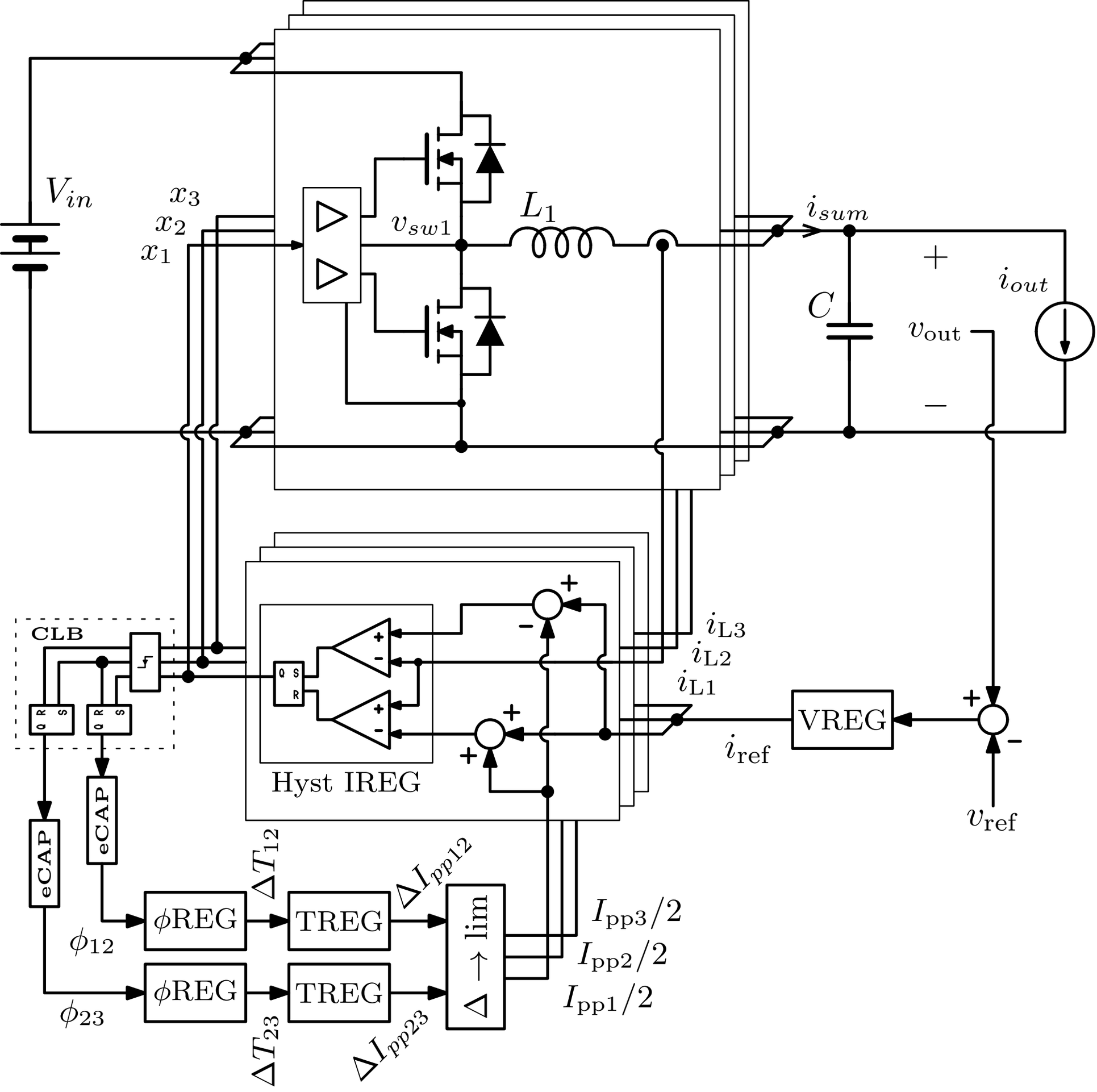
V_{in}
x_3
x_2
x_1
v_{sw1}
L_1
i_{sum}
C
v_{out}
i_{out}
CLB
Hyst IREG
i_{L3}
i_{L2}
i_{L1}
i_{ref}
VREG
v_{ref}
eCAP
eCAP
ϕREG
ϕREG
ϕ_{12}
ϕ_{23}
ΔT_{12}
ΔT_{23}
TREG
TREG
ΔI_{pp12}
ΔI_{pp23}
$\Delta \rightarrow \text{lim}$
$I_{\text{pp3}}/2$
$I_{\text{pp2}}/2$
$I_{\text{pp1}}/2$

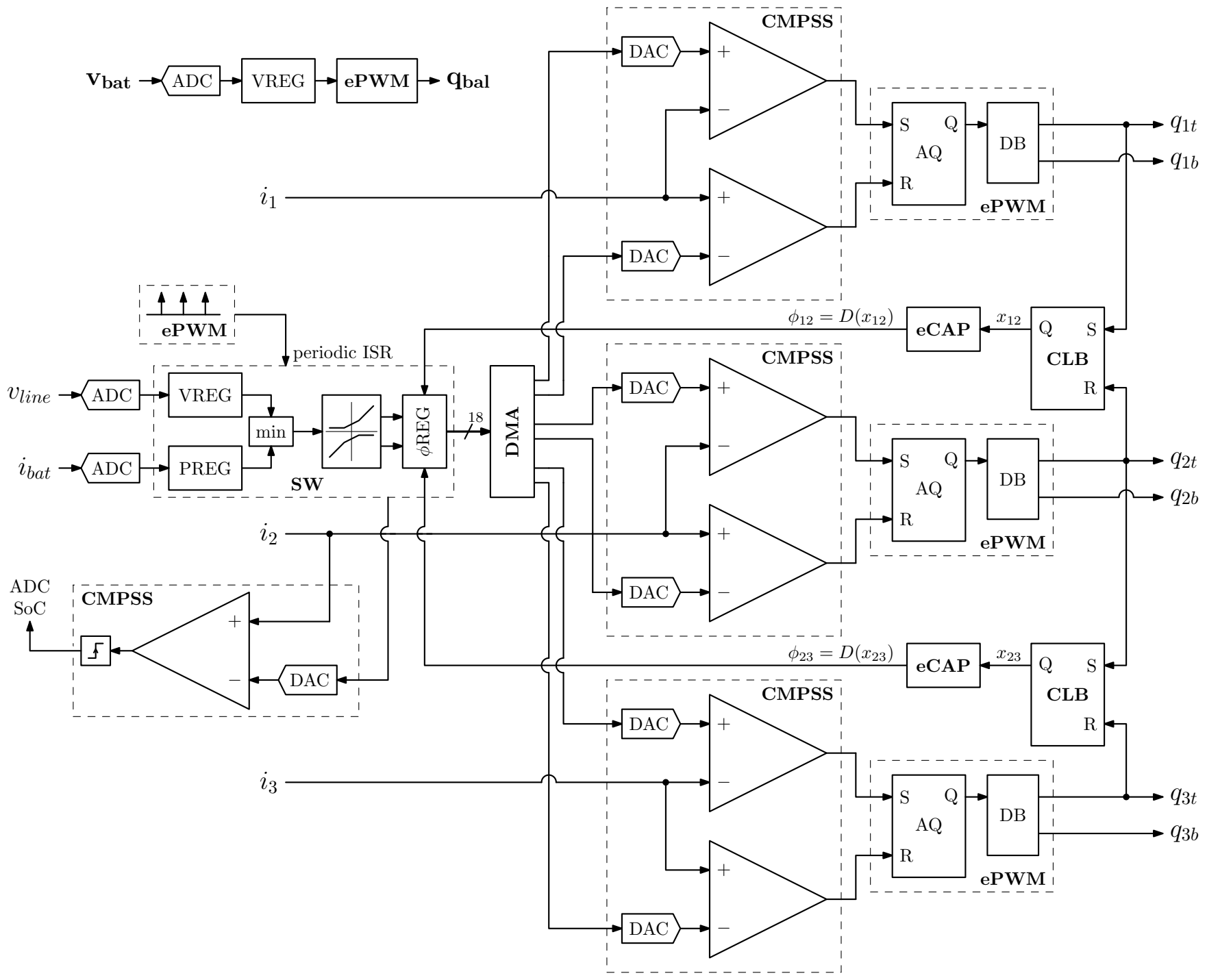
$\mathbf{v_{bat}}$
ADC
VREG
ePWM
$\mathbf{q_{bal}}$
CMPSS
DAC
+
−
S
Q
AQ
R
DB
ePWM
q_{1t}
q_{1b}
i_1
$\phi_{12} = D(x_{12})$
eCAP
x_{12}
CLB
ePWM
periodic ISR
v_{line}
i_{bat}
VREG
PREG
min
SW
ϕREG
18
DMA
q_{2t}
q_{2b}
i_2
ADC
SoC
$\phi_{23} = D(x_{23})$
x_{23}
i_3
q_{3t}
q_{3b}