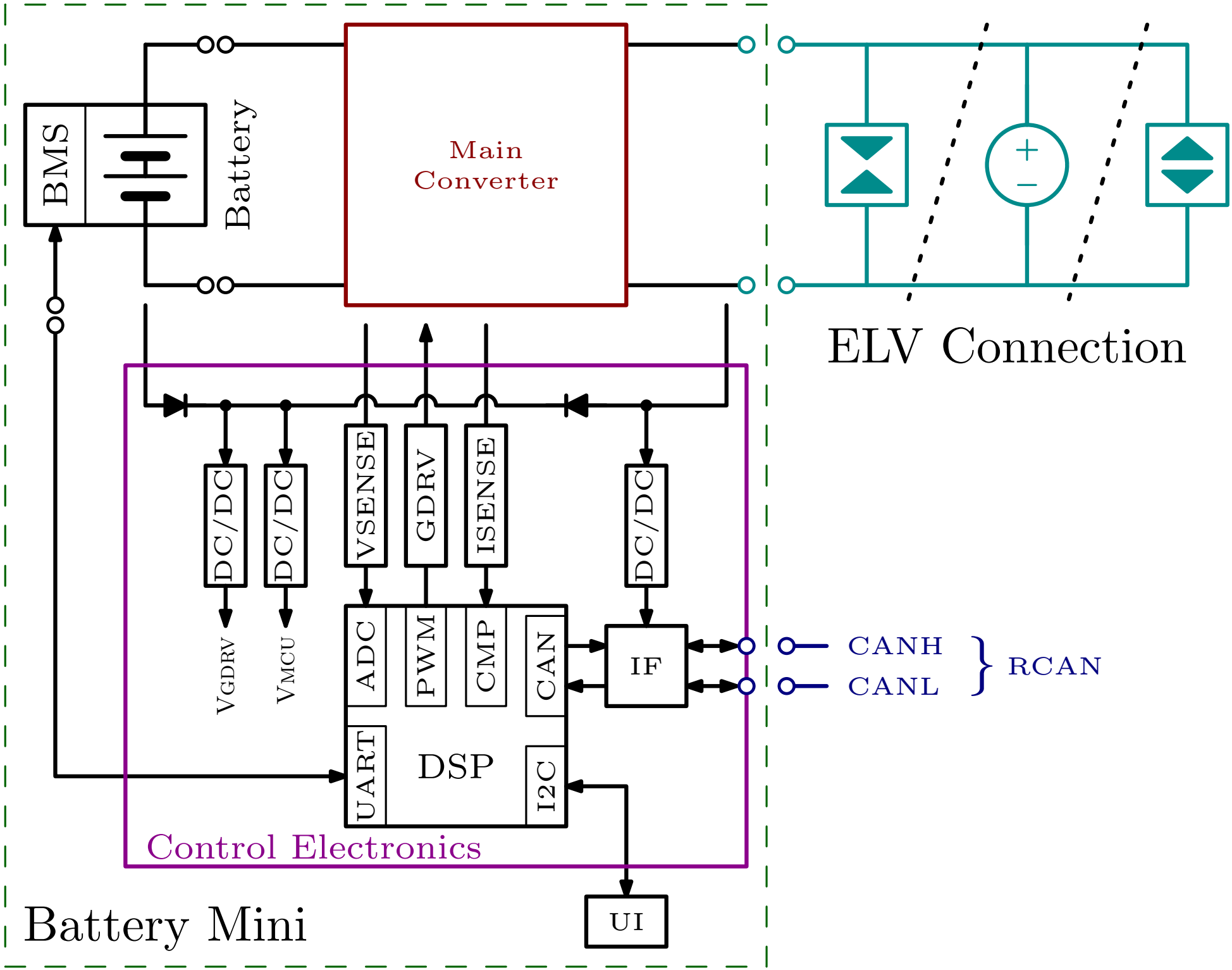
BMS
Battery
Main Converter
ELV Connection
DC/DC
DC/DC
VSENSE
GDRV
ISENSE
DC/DC
VGDRV
VMCU
ADC
PWM
CMP
CAN
IF
CANH
CANL
RCAN
UART
DSP
I2C
Control Electronics
UI
Battery Mini

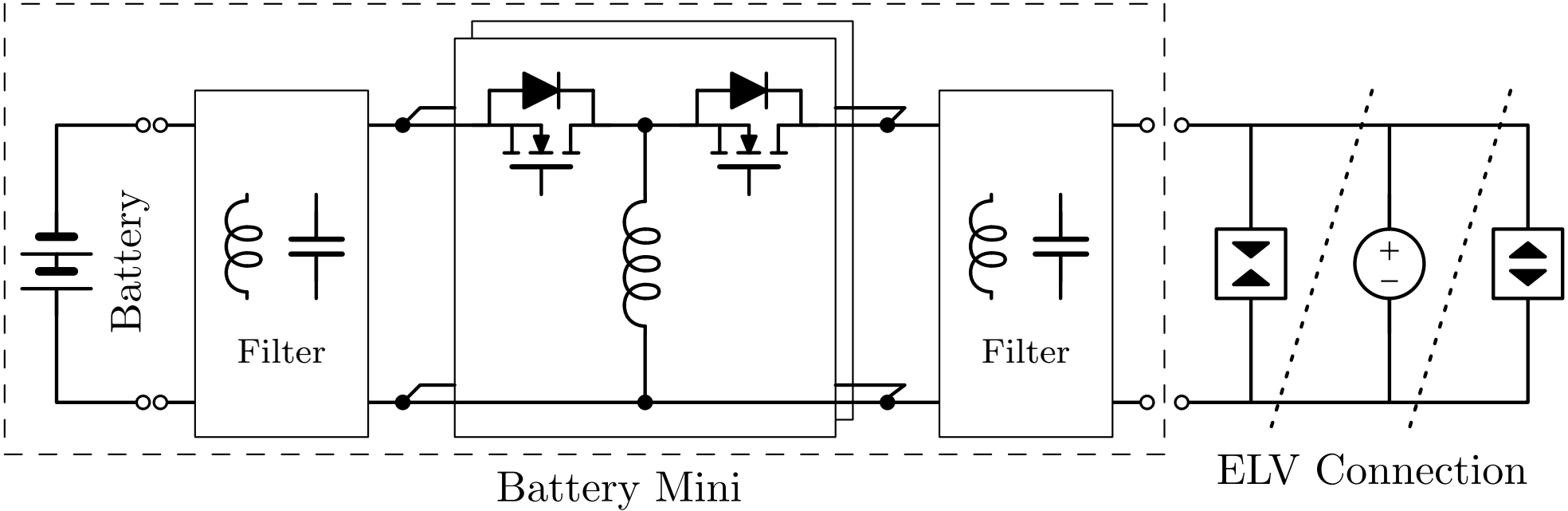
Battery
Filter
Filter
Battery Mini
ELV Connection

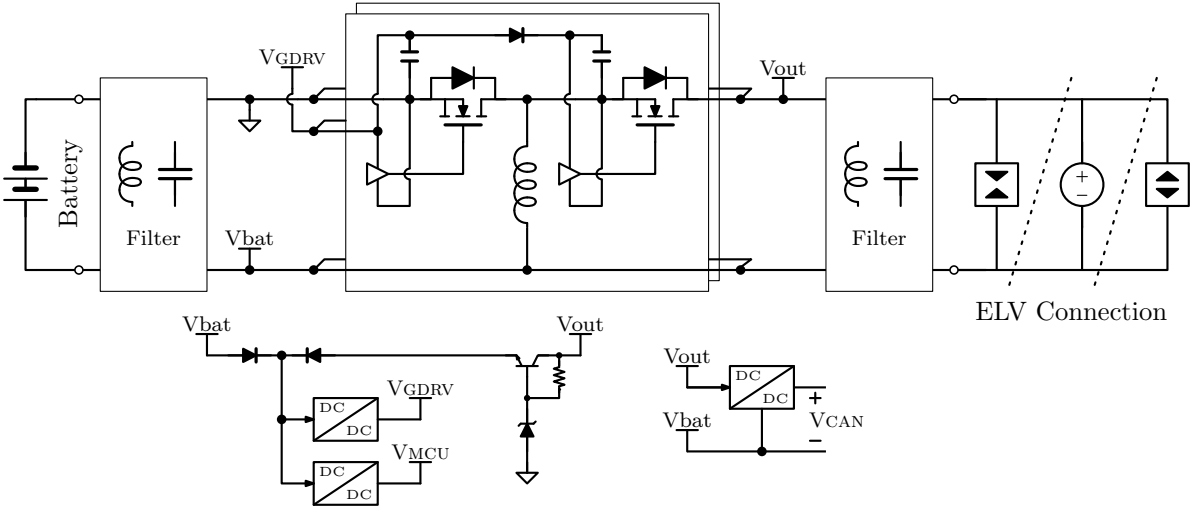
Battery
Filter
VGDRV
Vbat
Vout
Filter
ELV Connection
Vbat
Vout
VGDRV
DC
DC
VMCU
DC
DC
Vout
DC
DC
Vbat
VCAN
+
−

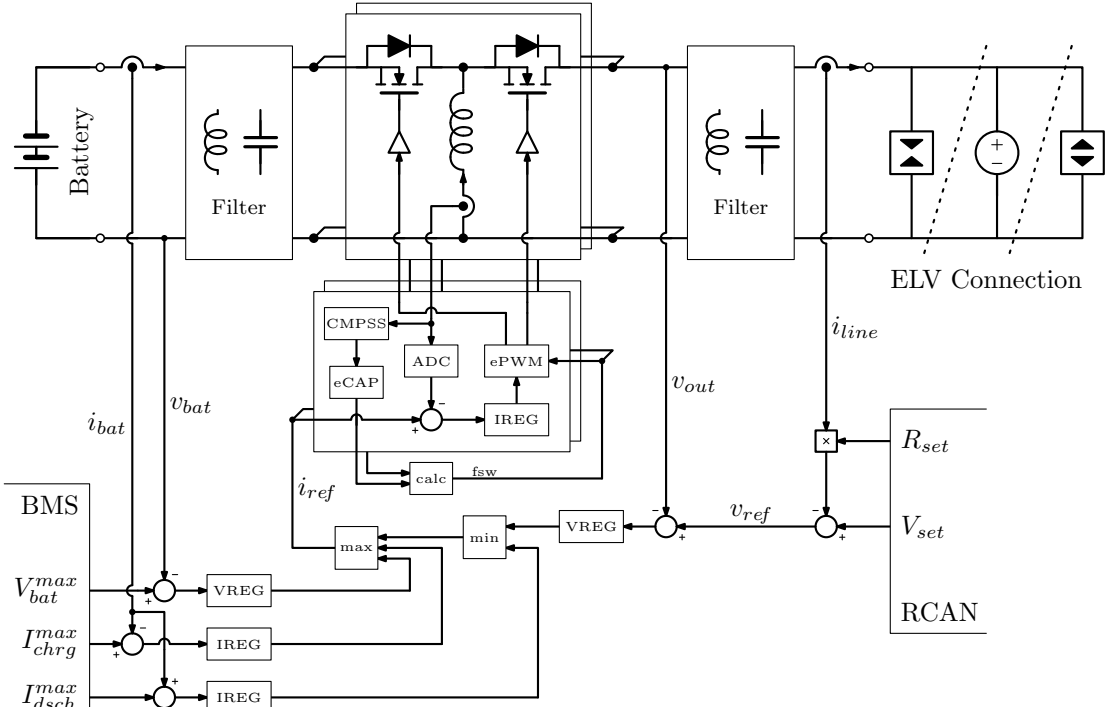
Battery
Filter
Filter
ELV Connection
CMPSS
ADC
ePWM
eCAP
IREG
calc
fsw
$i_{bat}$
$v_{bat}$
$i_{ref}$
$v_{out}$
$i_{line}$
$R_{set}$
$V_{set}$
RCAN
$v_{ref}$
VREG
min
max
BMS
$V_{bat}^{max}$
$I_{chrg}^{max}$
$I_{dsch}^{max}$
VREG
IREG
IREG

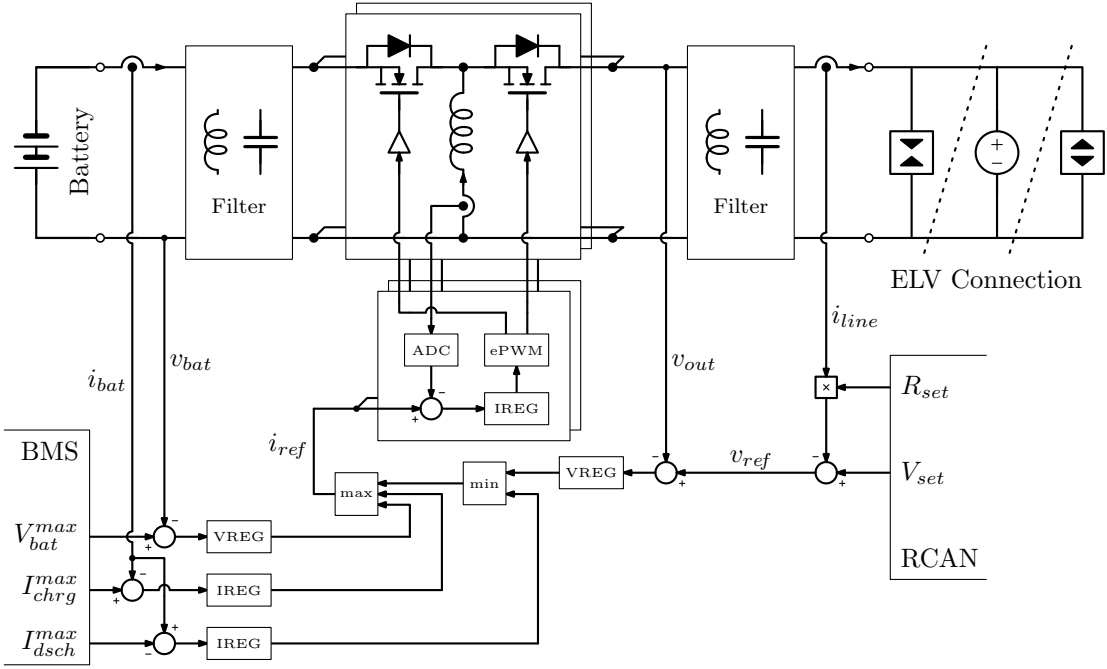
Battery
Filter
Filter
ELV Connection
ADC
ePWM
IREG
$i_{bat}$
$v_{bat}$
$v_{out}$
$i_{line}$
$R_{set}$
$V_{set}$
RCAN
$v_{ref}$
VREG
min
max
$i_{ref}$
BMS
$V_{bat}^{max}$
$I_{chrg}^{max}$
$I_{dsch}^{max}$
VREG
IREG
IREG

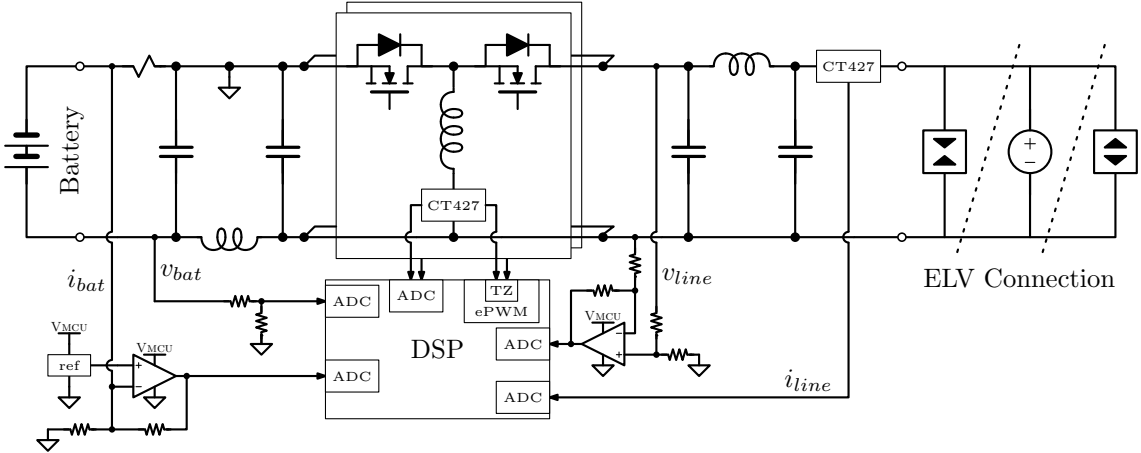
Battery
CT427
CT427
$i_{bat}$
$v_{bat}$
$v_{line}$
$i_{line}$
ADC
ADC
TZ
ePWM
DSP
ADC
ADC
ADC
$V_{MCU}$
$V_{MCU}$
$V_{MCU}$
ref
ELV Connection

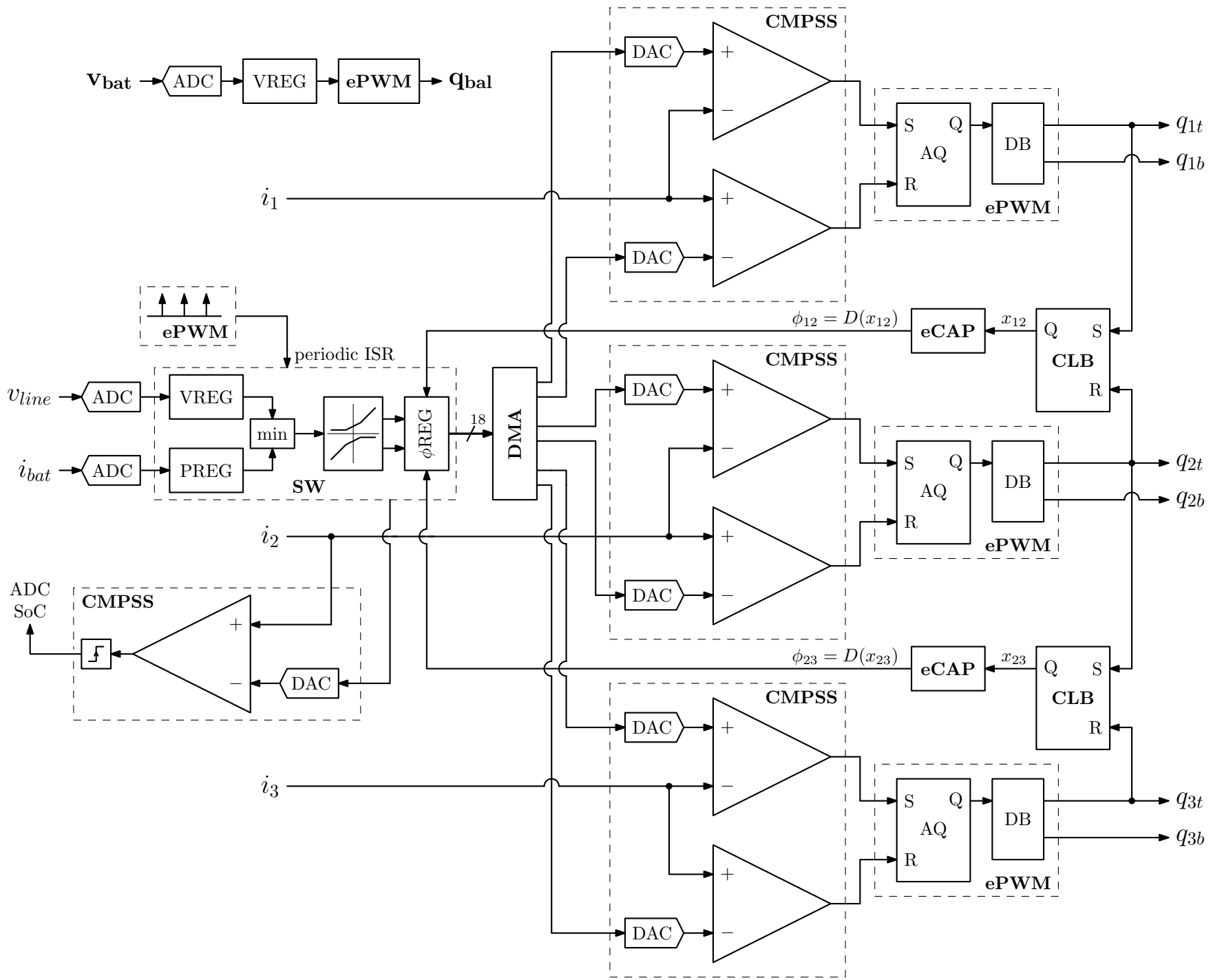
$\mathbf{v_{bat}}$
ADC
VREG
ePWM
$\mathbf{q_{bal}}$
CMPSS
DAC
+
−
S
Q
AQ
R
DB
ePWM
$q_{1t}$
$q_{1b}$
$i_1$
$\phi_{12} = D(x_{12})$
eCAP
$x_{12}$
CLB
$q_{2t}$
$q_{2b}$
$i_2$
$\phi_{23} = D(x_{23})$
$x_{23}$
$q_{3t}$
$q_{3b}$
$i_3$
ADC SoC
periodic ISR
$v_{line}$
$i_{bat}$
PREG
min
SW
$\phi$REG
18
DMA