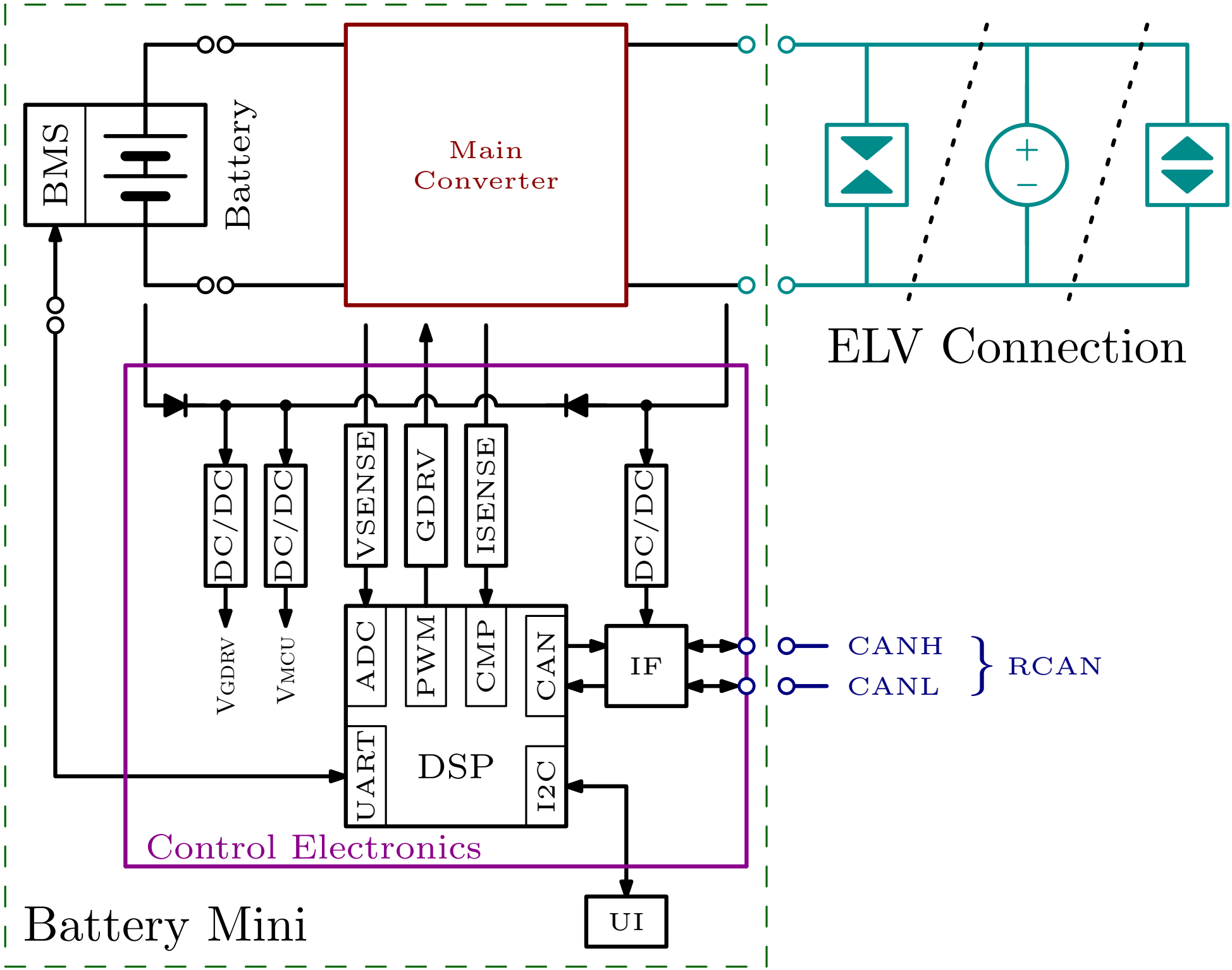
BMS
Battery
Main Converter
ELV Connection
DC/DC
DC/DC
VSENSE
GDRV
ISENSE
DC/DC
VGDRV
VMCU
ADC
PWM
CMP
CAN
IF
CANH
CANL
RCAN
UART
DSP
I2C
Control Electronics
UI
Battery Mini

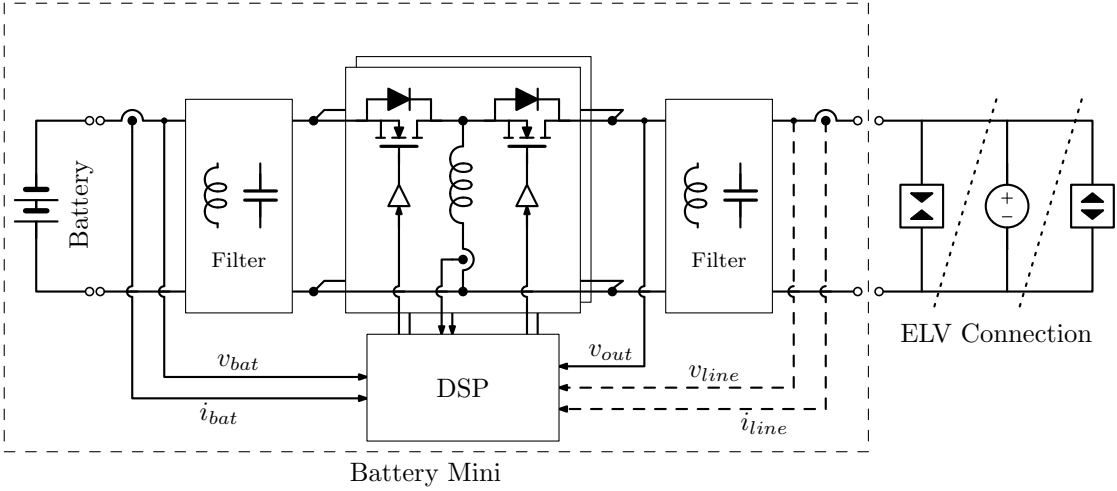
Battery
Filter
Filter
DSP
v_{bat}
i_{bat}
v_{out}
v_{line}
i_{line}
ELV Connection
Battery Mini

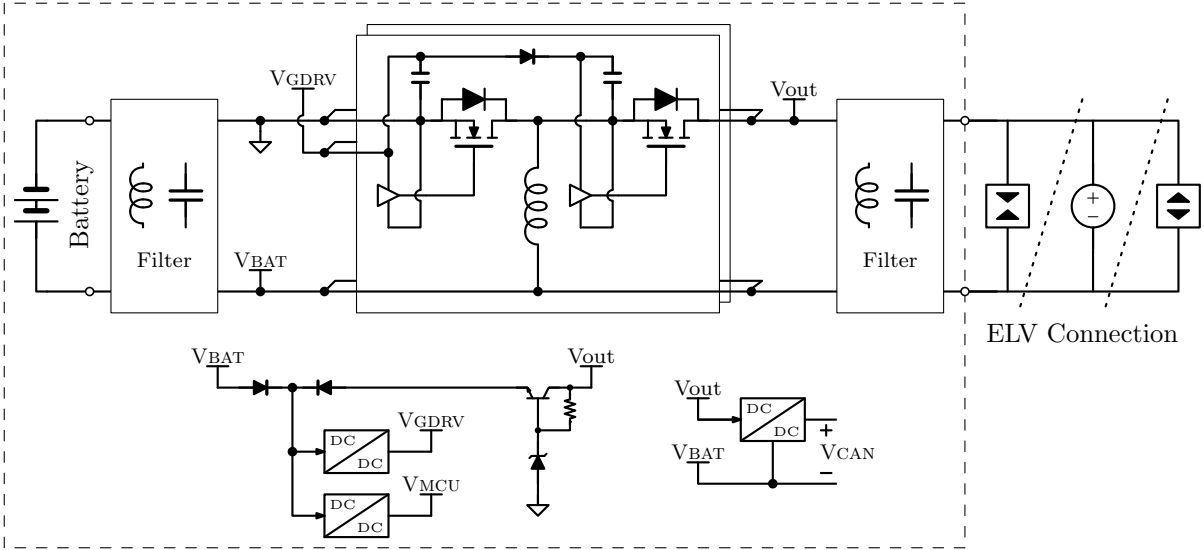
Battery
Filter
VGDRV
VBAT
Vout
Filter
ELV Connection
VBAT
Vout
VGDRV
DC
DC
VMCU
DC
DC
Vout
DC
DC
VBAT
+
VCAN
−

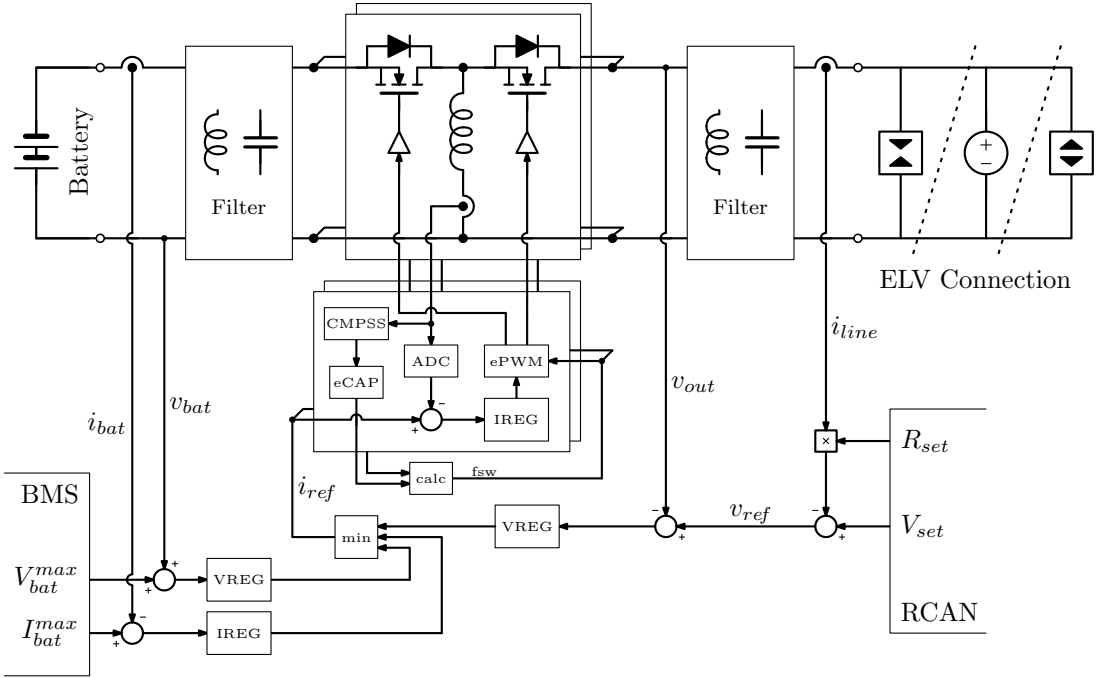
Battery
Filter
Filter
ELV Connection
CMPSS
ADC
ePWM
eCAP
IREG
calc
fsw
i_{bat}
v_{bat}
i_{ref}
v_{out}
i_{line}
R_{set}
V_{set}
v_{ref}
VREG
min
BMS
V_{bat}^{max}
I_{bat}^{max}
VREG
IREG
RCAN

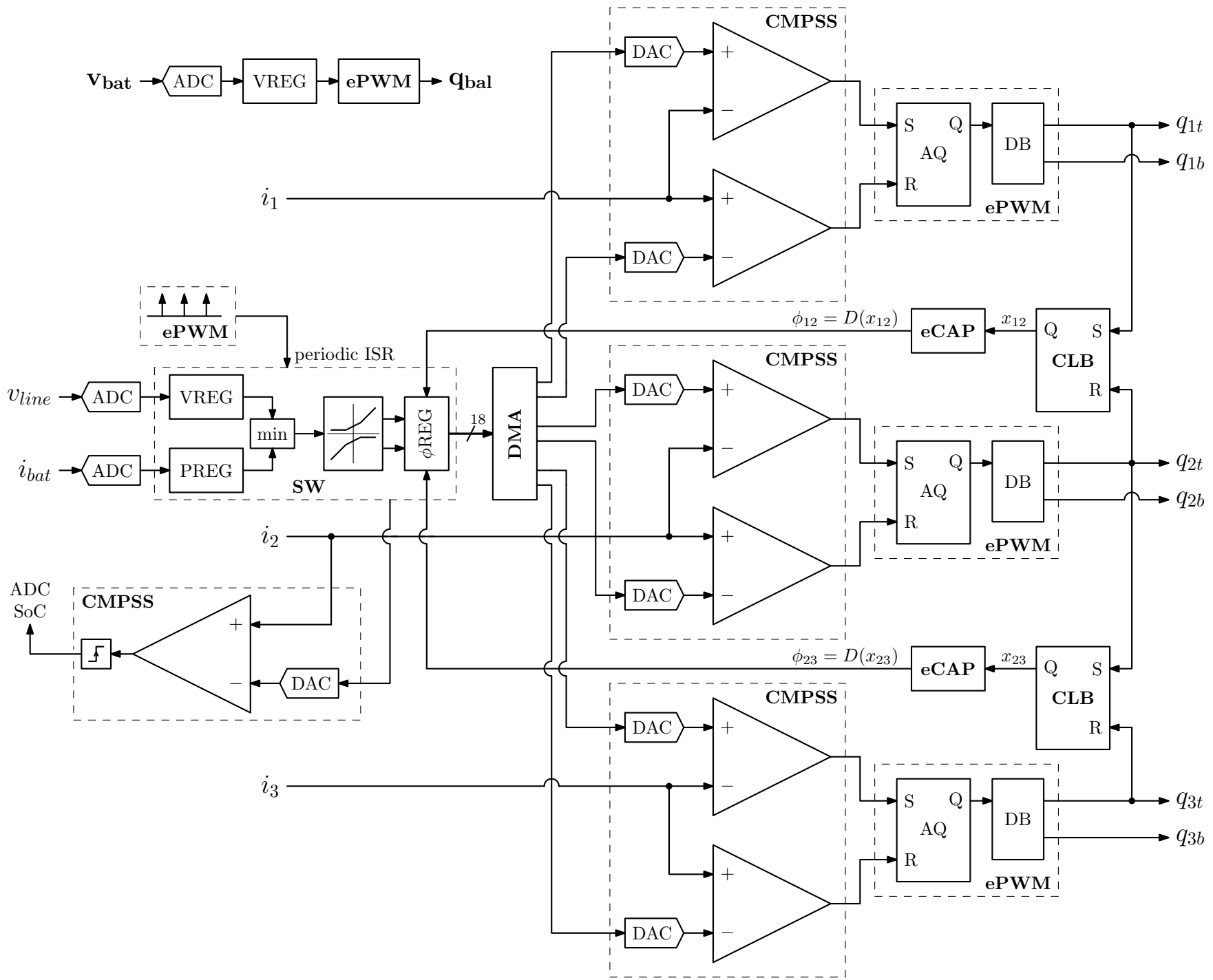
$\mathbf{v_{bat}}$
ADC
VREG
ePWM
$\mathbf{q_{bal}}$
CMPSS
DAC
+
−
S
Q
AQ
R
DB
ePWM
q_{1t}
q_{1b}
i_1
$\phi_{12} = D(x_{12})$
eCAP
x_{12}
CLB
q_{2t}
q_{2b}
i_2
$\phi_{23} = D(x_{23})$
x_{23}
q_{3t}
q_{3b}
i_3
ADC SoC
periodic ISR
v_{line}
i_{bat}
PREG
min
SW
ϕREG
18
DMA