Notes:
Damping resistors on SPI for ICSP?
10k resistor array?
12V input connector: 1935161

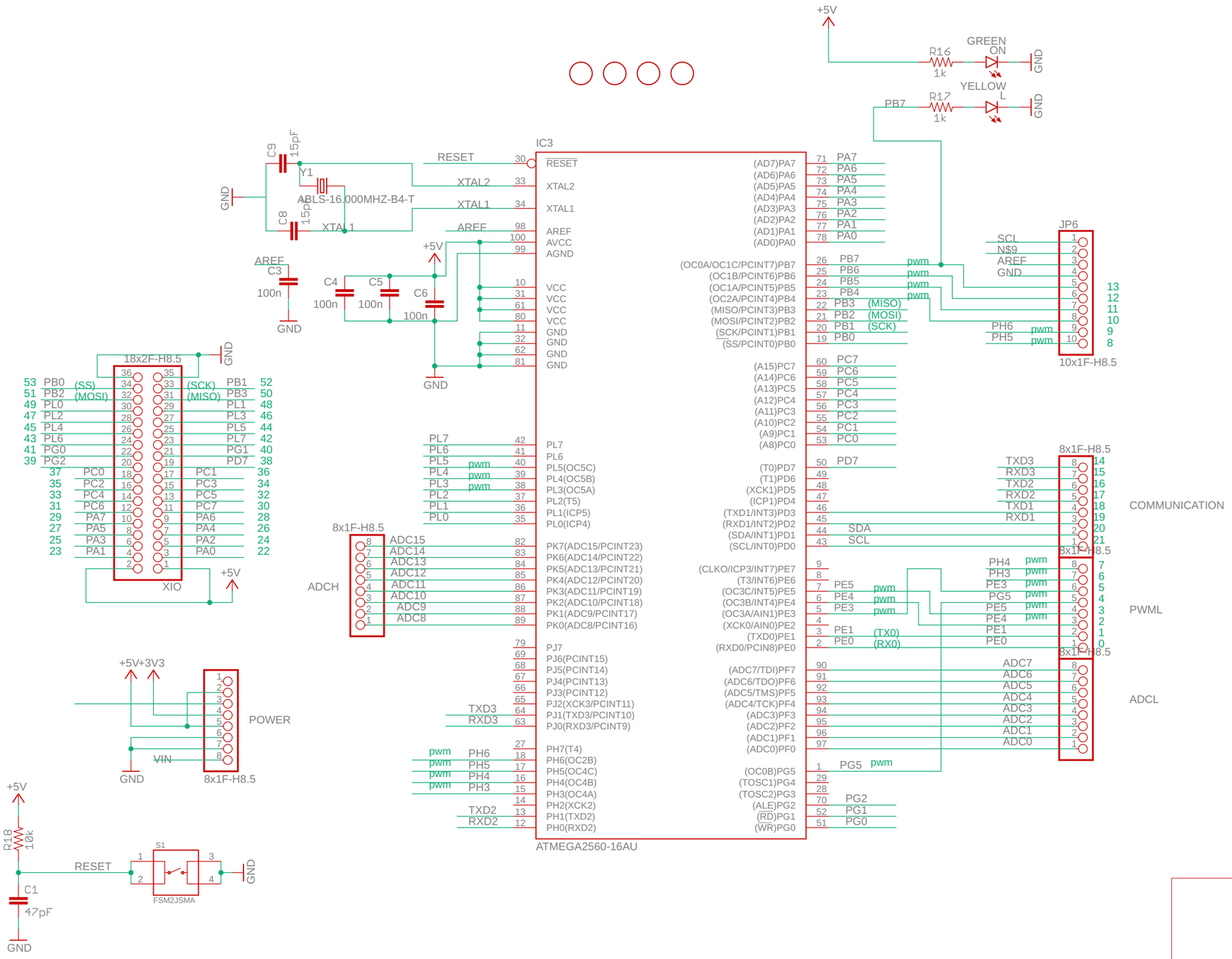

slave_board
2019-01-04 10:11 PM
Sheet: 1/6

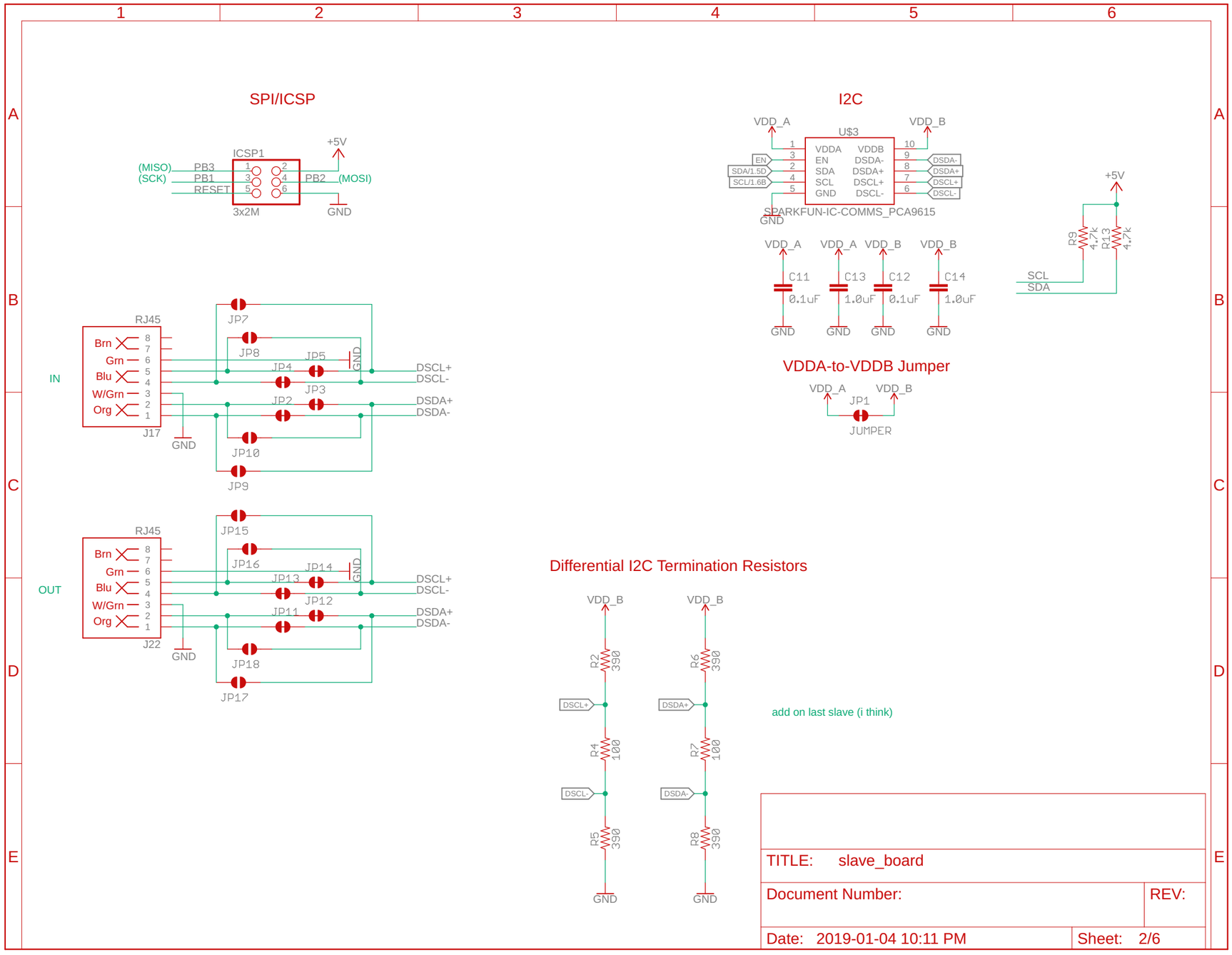
SPI/ICSP
ICSP1
+5V
(MISO)
(SCK)
PB3
PB1
RESET
PB2
(MOSI)
3x2M
GND
I2C
VDD_A
VDD_B
U$3
VDDA
EN
SDA
SCL
GND
VDDB
DSDA-
DSDA+
DSCL+
DSCL-
SDA/1.5D
SCL/1.6B
SPARKFUN-IC-COMMS_PCA9615
C11
C13
C12
C14
0.1uF
1.0uF
R9
R13
4.7k
SCL
SDA
VDDA-to-VDDB Jumper
JP1
JUMPER
RJ45
Brn
Grn
Blu
W/Grn
Org
IN
J17
JP7
JP8
JP5
JP4
JP3
JP2
JP10
JP9
DSCL+
DSCL-
DSDA+
DSDA-
OUT
J22
JP15
JP16
JP14
JP13
JP12
JP11
JP18
JP17
Differential I2C Termination Resistors
R2
R4
R5
R6
R7
R8
390
100
add on last slave (i think)
TITLE: slave_board
Document Number:
REV:
Date: 2019-01-04 10:11 PM
Sheet: 2/6

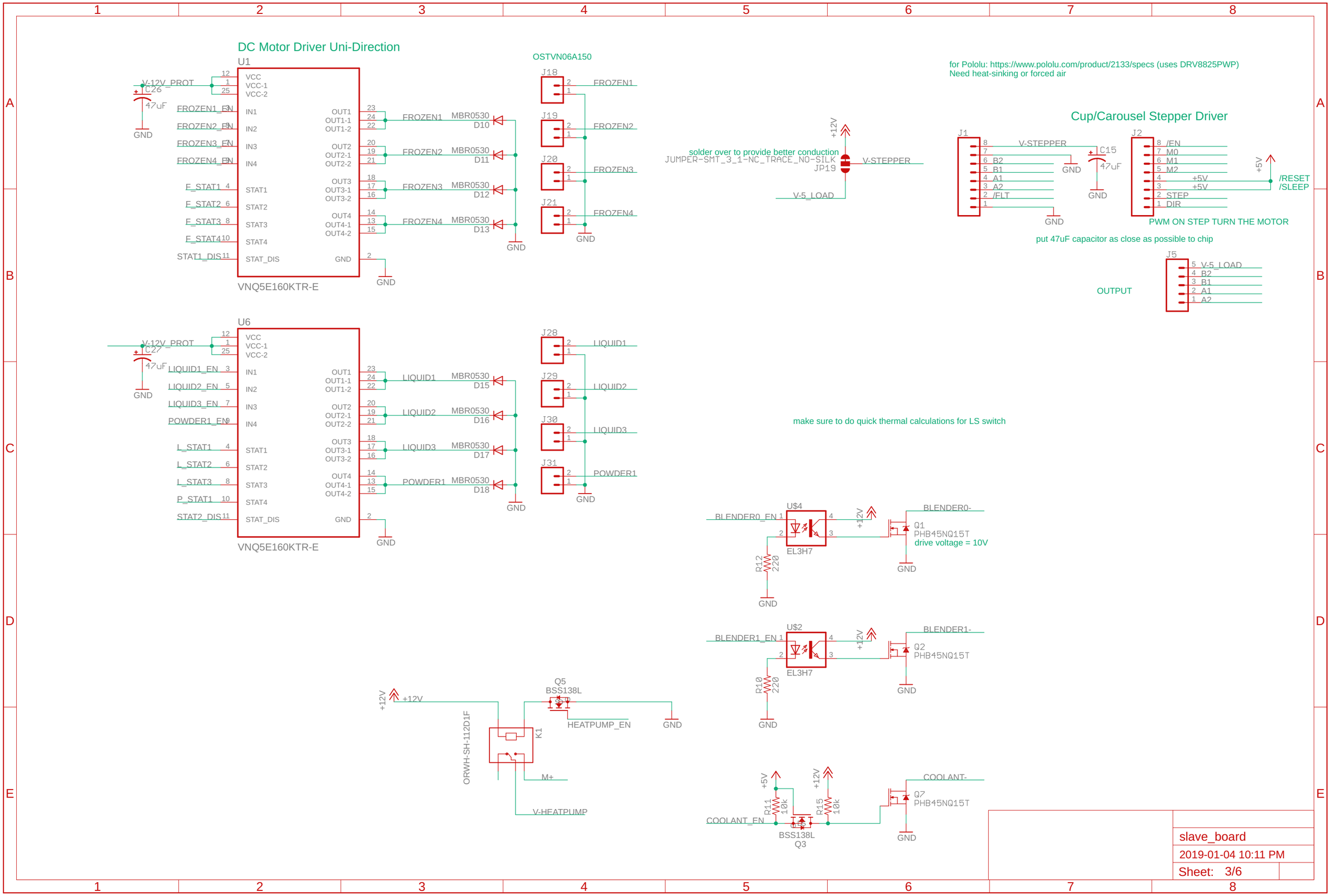
DC Motor Driver Uni-Direction
U1
VNQ5E160KTR-E
V-12V_PROT
C26
47uF
GND
FROZEN1_EN
FROZEN2_EN
FROZEN3_EN
FROZEN4_EN
F_STAT1
F_STAT2
F_STAT3
F_STAT4
STAT1_DIS
VCC
VCC-1
VCC-2
IN1
IN2
IN3
IN4
STAT1
STAT2
STAT3
STAT4
STAT_DIS
OUT1
OUT1-1
OUT1-2
OUT2
OUT2-1
OUT2-2
OUT3
OUT3-1
OUT3-2
OUT4
OUT4-1
OUT4-2
FROZEN1
FROZEN2
FROZEN3
FROZEN4
MBR0530
D10
D11
D12
D13
OSTVN06A150
J18
J19
J20
J21
U6
VNQ5E160KTR-E
V-12V_PROT
C27
47uF
LIQUID1_EN
LIQUID2_EN
LIQUID3_EN
POWDER1_EN
L_STAT1
L_STAT2
L_STAT3
P_STAT1
STAT2_DIS
LIQUID1
LIQUID2
LIQUID3
POWDER1
D15
D16
D17
D18
J28
J29
J30
J31
for Pololu: https://www.pololu.com/product/2133/specs (uses DRV8825PWP)
Need heat-sinking or forced air
solder over to provide better conduction
JUMPER-SMT_3_1-NC_TRACE_NO-SILK
JP19
+12V
V-STEPPER
V-5_LOAD
Cup/Carousel Stepper Driver
J1
J2
V-STEPPER
C15
47uF
B2
B1
A1
A2
/FLT
/EN
M0
M1
M2
+5V
/RESET
/SLEEP
STEP
DIR
PWM ON STEP TURN THE MOTOR
put 47uF capacitor as close as possible to chip
OUTPUT
J5
V-5_LOAD
B2
B1
A1
A2
make sure to do quick thermal calculations for LS switch
U$4
BLENDER0_EN
EL3H7
R12
220
BLENDER0-
Q1
PHB45NQ15T
drive voltage = 10V
U$2
BLENDER1_EN
R10
220
BLENDER1-
Q2
PHB45NQ15T
Q5
BSS138L
HEATPUMP_EN
ORWH-SH-112D1F
K1
M+
V-HEATPUMP
COOLANT_EN
R11
10k
R15
10k
BSS138L
Q3
COOLANT-
Q7
PHB45NQ15T
slave_board
2019-01-04 10:11 PM
Sheet: 3/6

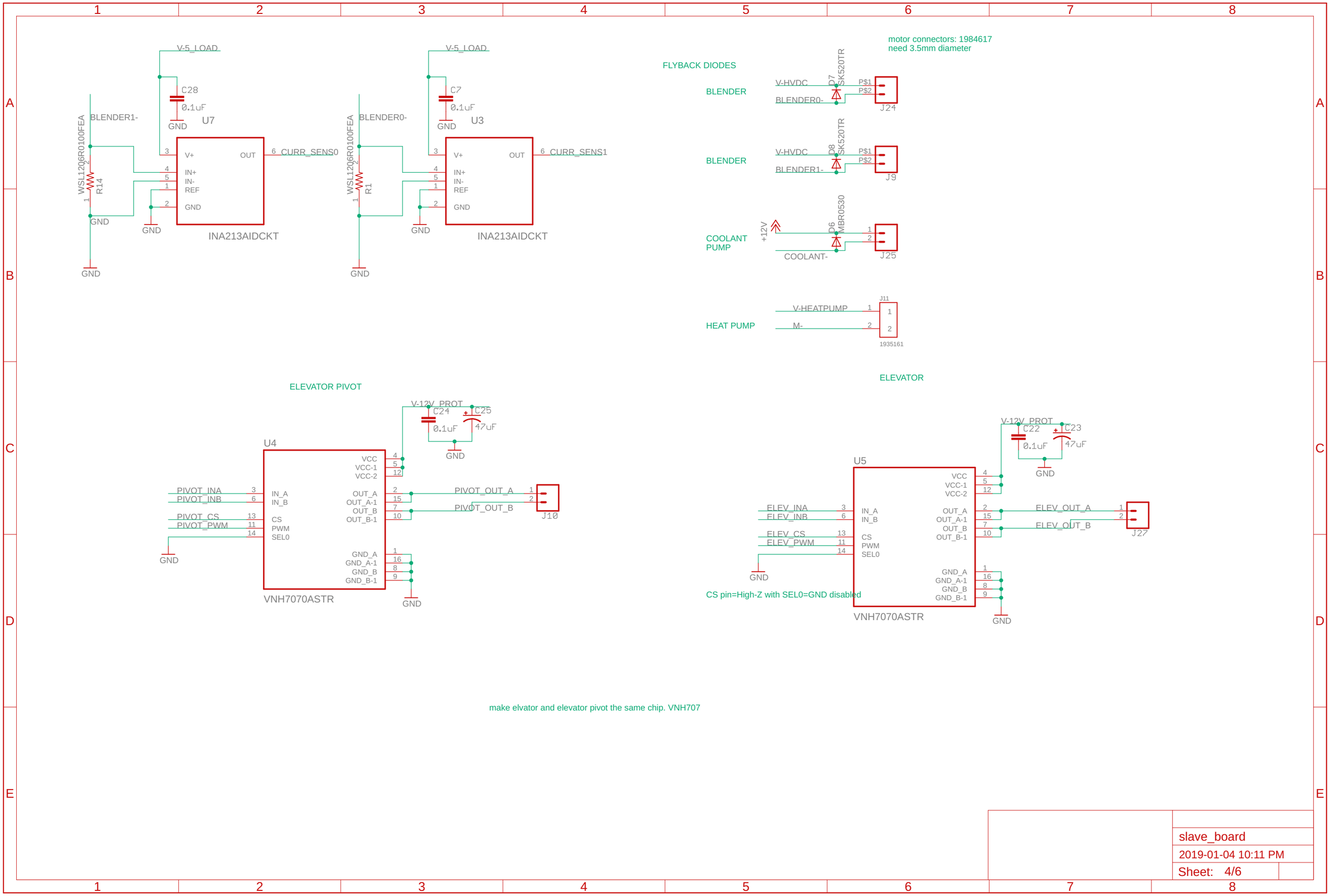

slave_board
2019-01-04 10:11 PM
Sheet: 4/6

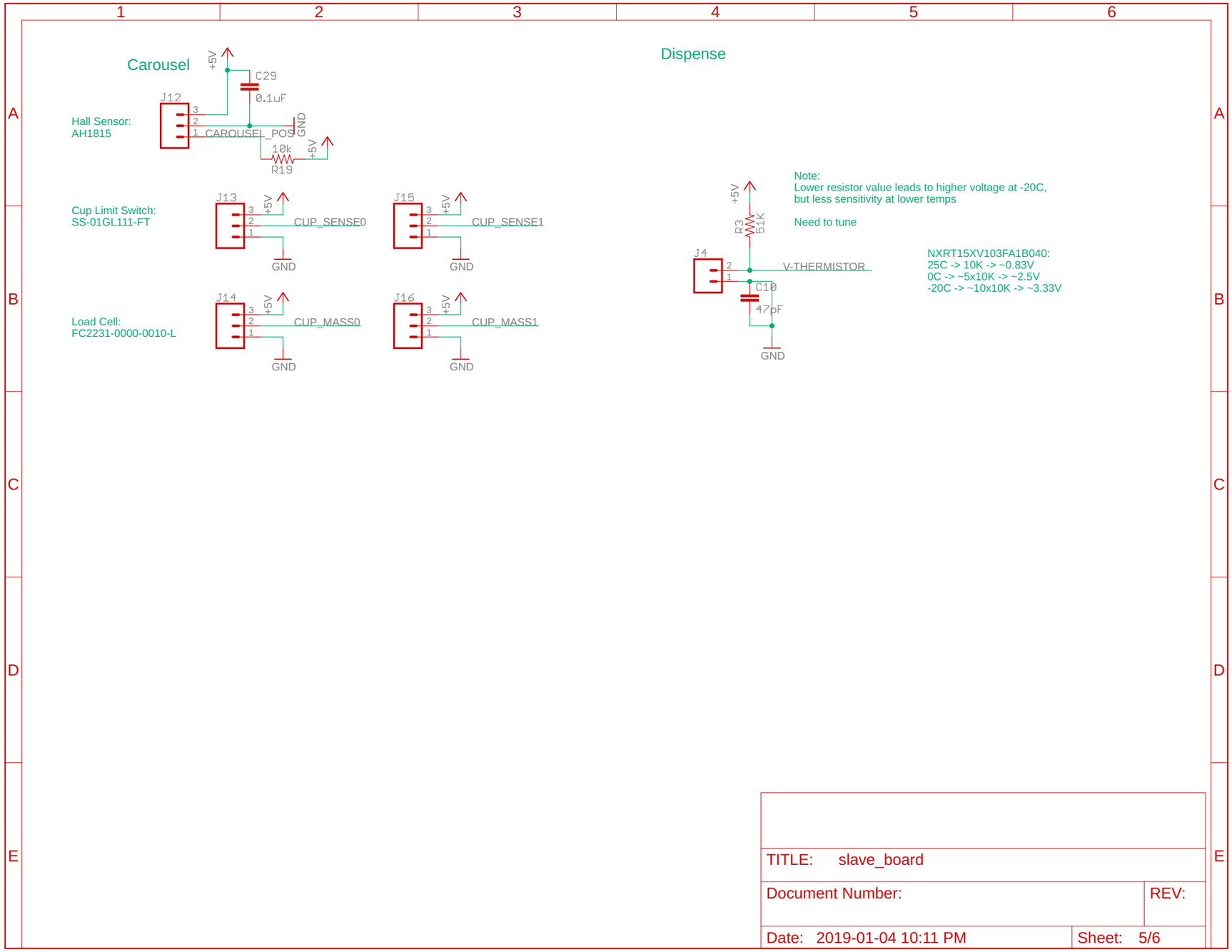
Carousel
Hall Sensor:
AH1815
J12
+5V
C29
0.1uF
CAROUSEL_POS
GND
10k
R19
Cup Limit Switch:
SS-01GL111-FT
J13
CUP_SENSE0
J15
CUP_SENSE1
Load Cell:
FC2231-0000-0010-L
J14
CUP_MASS0
J16
CUP_MASS1
Dispense
Note:
Lower resistor value leads to higher voltage at -20C,
but less sensitivity at lower temps
Need to tune
R3
51K
J4
V-THERMISTOR
C10
47pF
NXRT15XV103FA1B040:
25C -> 10K -> ~0.83V
0C -> ~5x10K -> ~2.5V
-20C -> ~10x10K -> ~3.33V
TITLE: slave_board
Document Number:
REV:
Date: 2019-01-04 10:11 PM
Sheet: 5/6

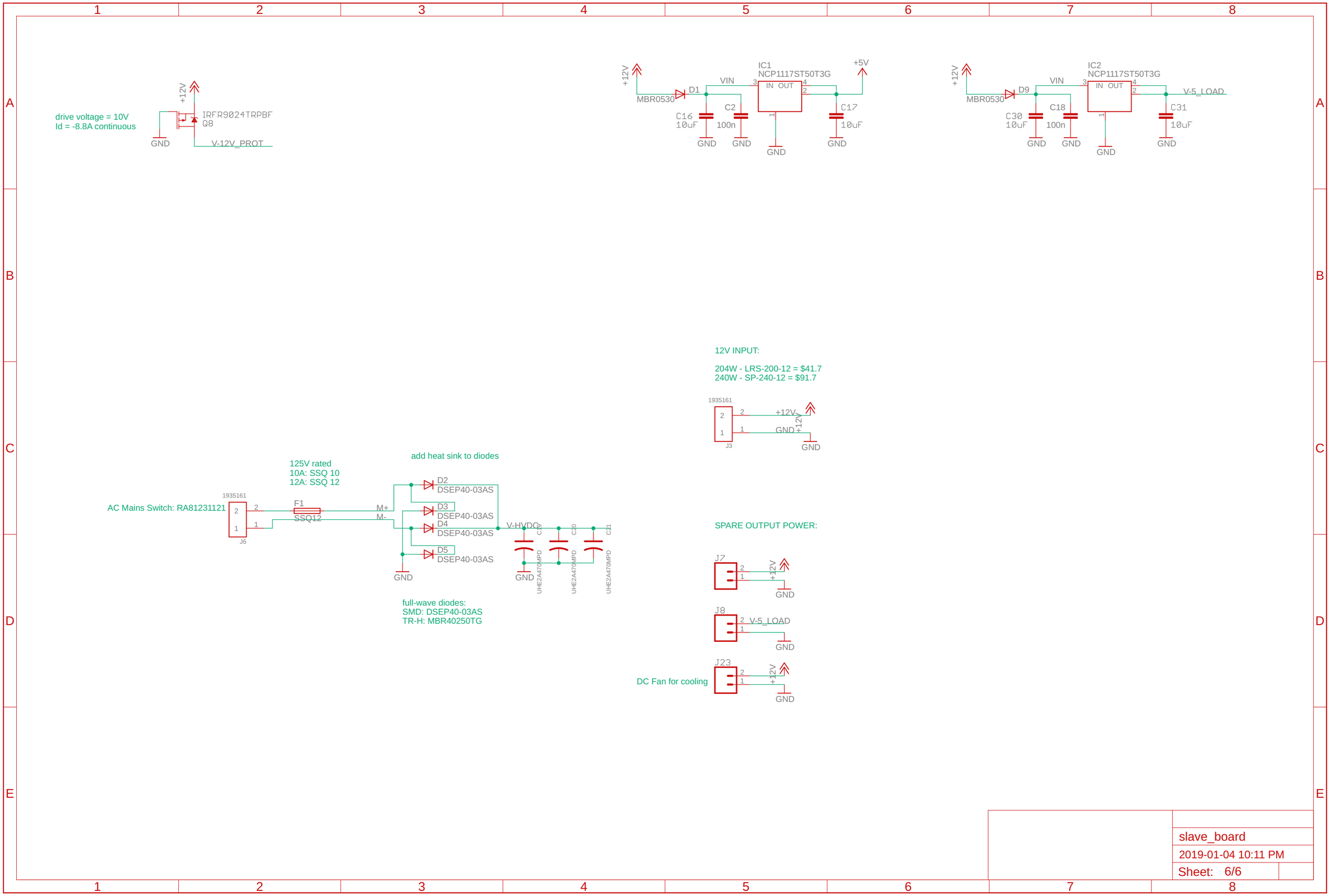
drive voltage = 10V
Id = -8.8A continuous
+12V
IRFR9024TRPBF
Q8
GND
V-12V_PROT
+12V
MBR0530
D1
VIN
IC1
NCP1117ST50T3G
IN OUT
+5V
C16
10uF
C2
100n
C17
10uF
GND
+12V
MBR0530
D9
VIN
IC2
NCP1117ST50T3G
IN OUT
V-5_LOAD
C30
10uF
C18
100n
C31
10uF
GND
12V INPUT:
204W - LRS-200-12 = $41.7
240W - SP-240-12 = $91.7
1935161
J3
+12V
GND
125V rated
10A: SSQ 10
12A: SSQ 12
add heat sink to diodes
AC Mains Switch: RA81231121
1935161
J6
F1
SSQ12
M+
M-
D2
DSEP40-03AS
D3
DSEP40-03AS
D4
DSEP40-03AS
D5
DSEP40-03AS
V-HVDC
C19
C20
C21
UHE2A470MPD
full-wave diodes:
SMD: DSEP40-03AS
TR-H: MBR40250TG
SPARE OUTPUT POWER:
J7
J8
V-5_LOAD
J23
DC Fan for cooling
slave_board
2019-01-04 10:11 PM
Sheet: 6/6