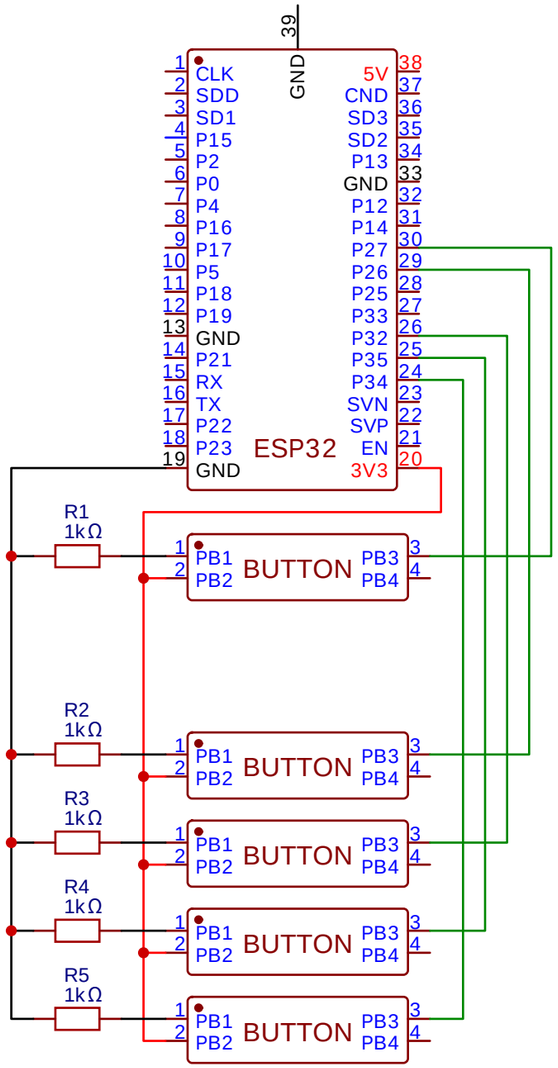

TITLE: Sheet_5		REV: 1.0
EasyEDA	Company: Your Company	Sheet: 1/1
	Date: 2022-02-01 Drawn By: Sep van der Biezen	