Power Regulation

7V

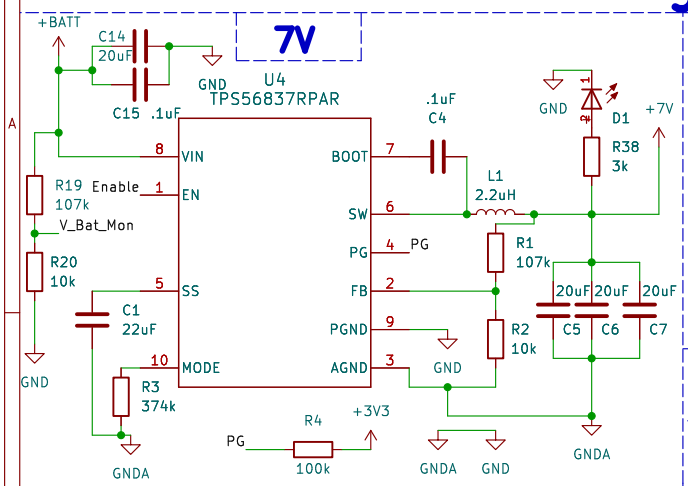

3.3V

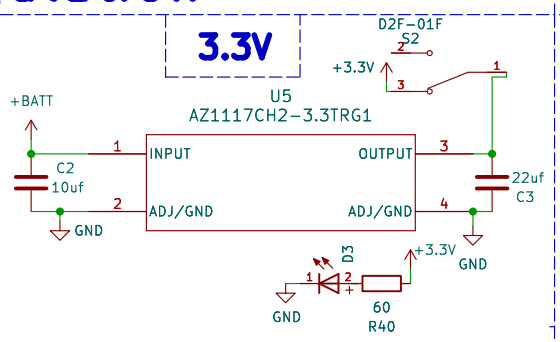

IO

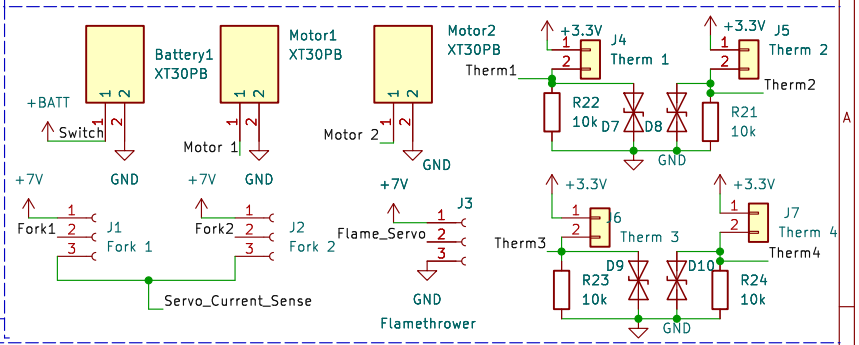

Motor Controller

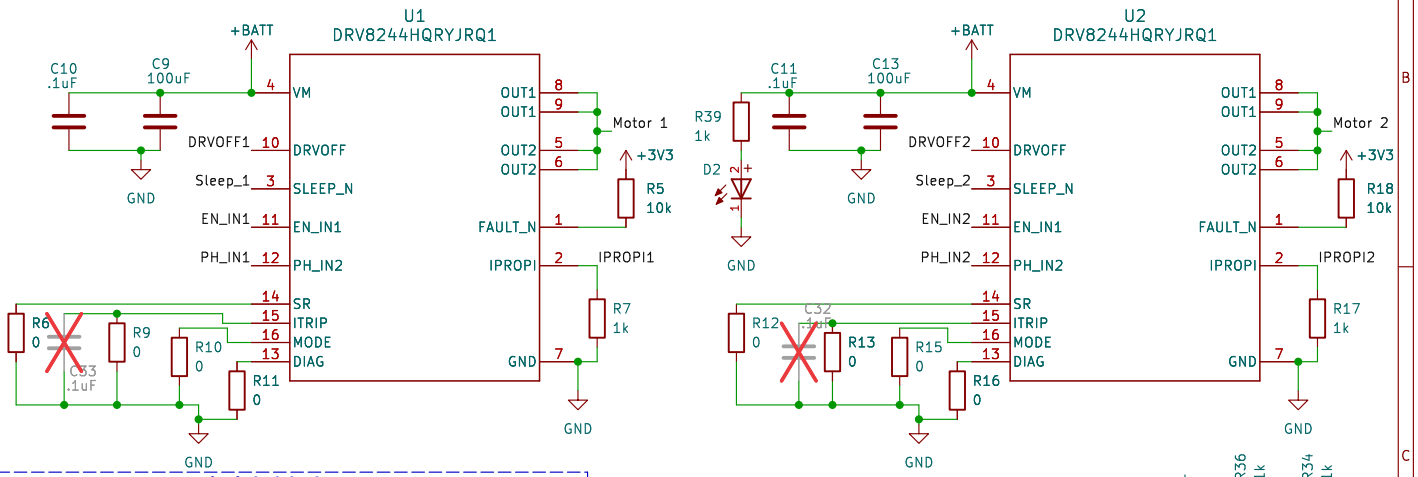

5V

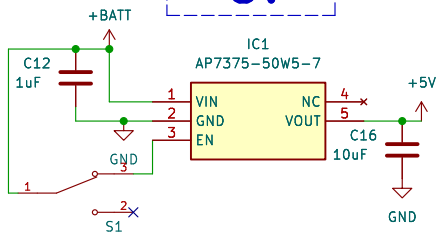

MCU

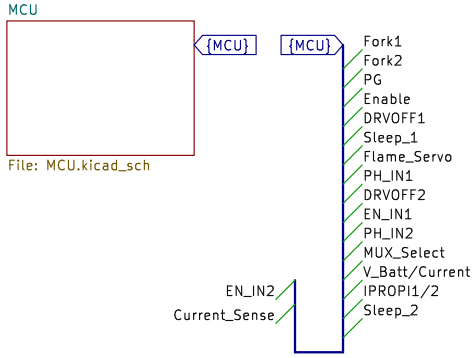

MUX

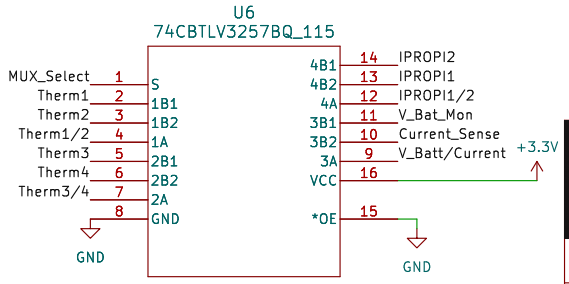

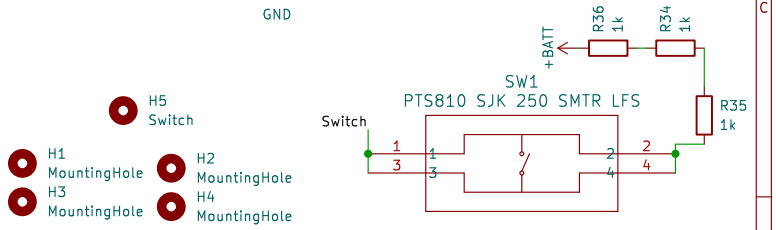

Olin College of Engineering

Sheet: /
File: Chimera.kicad_sch

Title: Chimera Main Board

Size: A4	Date:	Rev: 1
KiCad E.D.A. kicad 7.0.10-7.0.10~ubuntu22.04.1		Id: 1/2

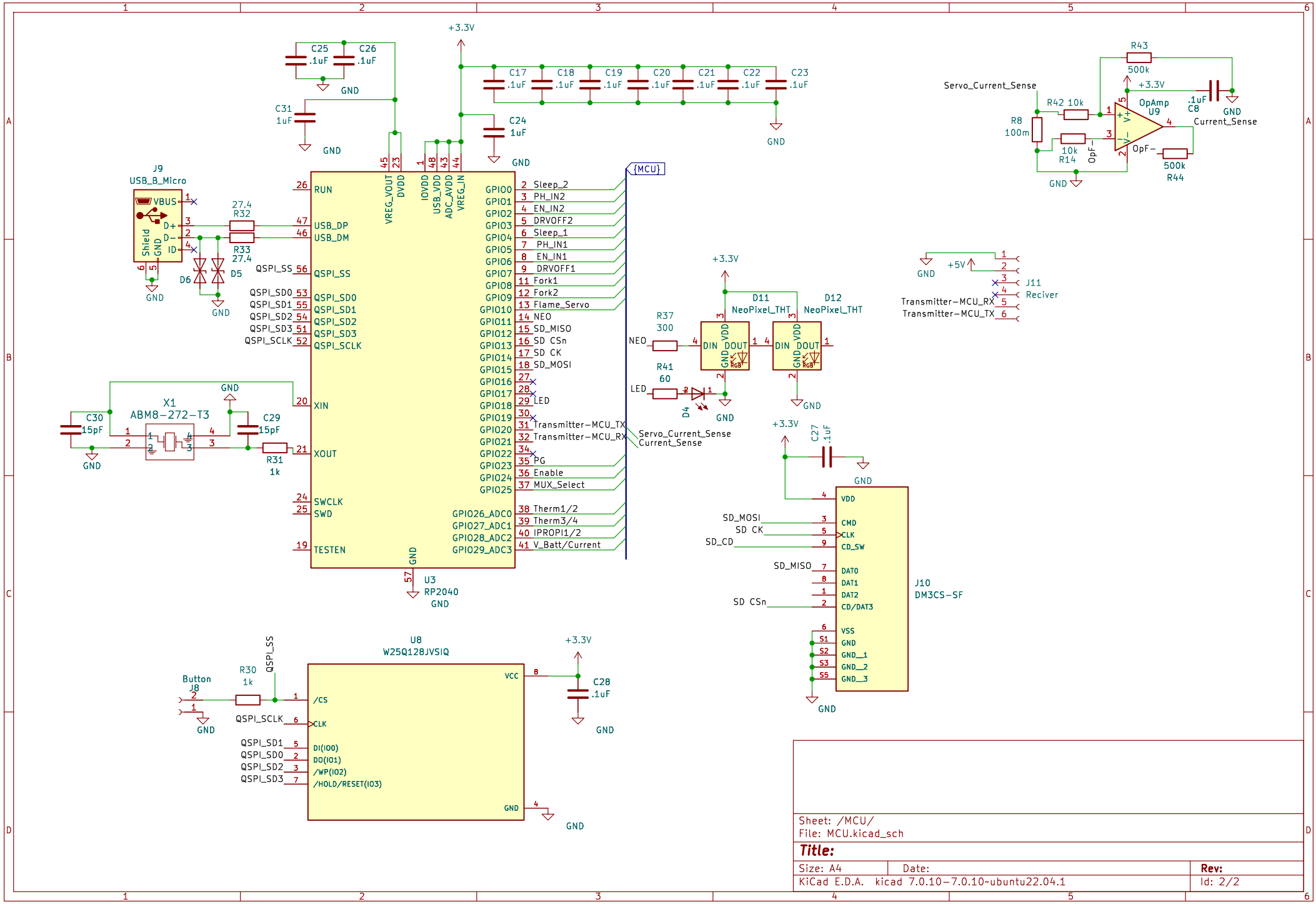

Sheet: /MCU/
File: MCU.kicad_sch

Title:

Size: A4	Date:	Rev:
KiCad E.D.A. kicad 7.0.10-7.0.10~ubuntu22.04.1		Id: 2/2