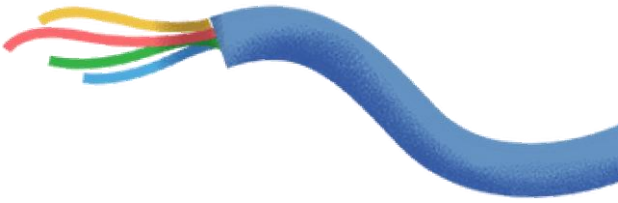

U A R T

UNIVERSAL ASYNCHRONOUS RECIEVER / TRANSMITTER

BRINDHAVAN B

BASICS OF DATA TRANSFER

BIT RATE

Bit rate measures how many bits are transmitted per second. It is expressed in Kbps, Mbps, Gbps. Bit rate represents the speed of data transfer in case of binary representation.

Bit Rate = bits per second x Baud rate

BAUD RATE

Number of signals transmitted per second. Signal represent one or more bits depending on the modulation. When baud rate is high that means data is transferred at high speed but it requires precise timing. Incase of lower baud rate communication is slower but it offers more tolerance in timing.

Baud rate = Bit rate / Bits per symbol

Eg ; Serial.begin(9600);

It represents 9600 bits are transmitted per second, for 1 signal 1 bit is transmitted.

INTRODUCTION TO UART

UART (Universal Asynchronous Receiver Transmitter) is a serial communication protocol used to exchange the data between the two devices without a shared clock, that is why it is Asynchronous (no common clock line). It is widely used in microcontrollers, GPS modules, Bluetooth modules. UART enables serial data exchange between devices by using only two wires, reduces buses. It is UNIVERSAL because it can work across many devices.

UART CONNECTION

In UART, only two wires are used that is Tx and Rx. The Tx pin of first device is connected to the Rx pin of the second device. The Rx pin of the second device is connected to the Tx pin of the first device. It reduces too many connections(buses), while in parallel communication for transferring 8 bit, 8 different pins are used if bits are 8-bit transfer. The speed of the data transfer in UART is slow compared to parallel communication.

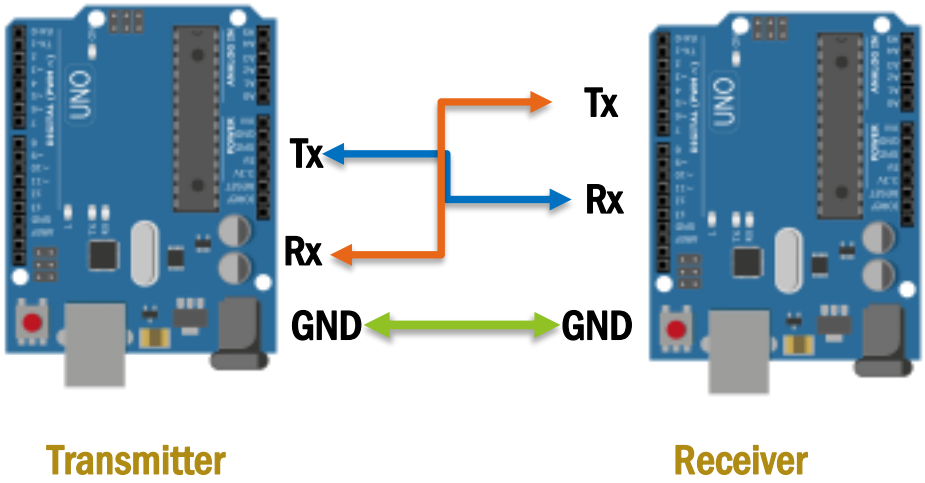

UART DATA FRAME FORMAT

UART sends the data bit by bit in a fixed frame. The frame usually starts with start bit (0) and followed by data bits (usually 8-bit), parity bit(optional) and finally end with stop bit (1). As the UART is asynchronous, it doesn't use common clock line instead the devices which operates on UART should agree on their baud rates, number of data bits, Parity bits, Start and stop bit to synchronize the timing of data transmission. Timing is agreed internally using there agreed parameters.

FRAME STRUCTURE

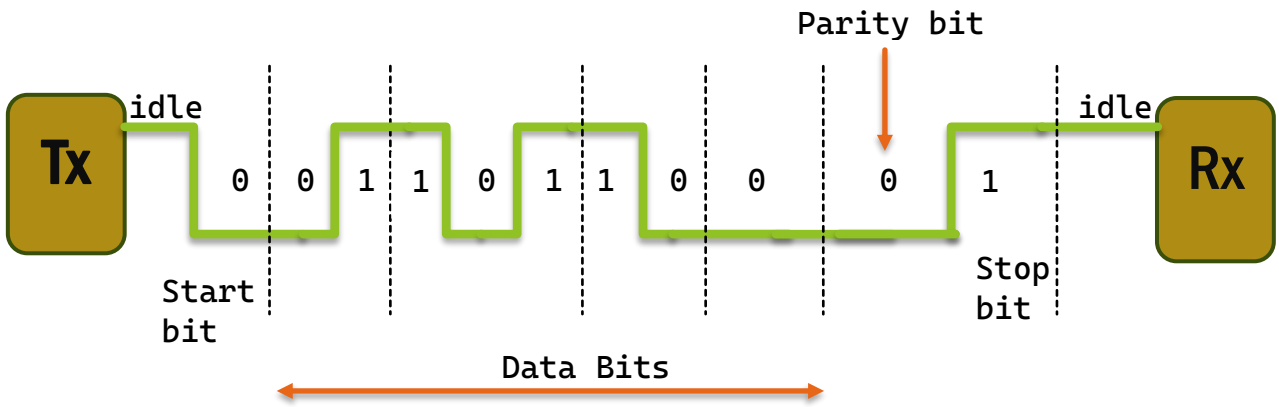

Start Bit

Each data frame in UART communication is leaded by a single bit that is Start Bit. Start bit is always 0 bit that is logic low. It signals the receiver that Data Transmission is initiated. It informs the receiver to prepare for receiving the incoming data bits. It will move the receiver from idle high state to receiving state.

Data Bit

Data bits will carry the information usually in 8-bit configuration, it may support 4-bit, 6-bit,7-bit configuration based on the device used. While transferring the data, always LSB (Least Significant Bit) is send first and followed by other bits and end with MSB (Most Significant Bit).

In UART communication, although the Least Significant Bit (LSB) is transmitted first, the data is not reversed at the receiver. This is because both the transmitter and receiver follow the predefined protocol in which the receiver expects the first bit after the start bit to be the LSB. As each bit is received, it is placed in its corresponding bit position(b0-b7) in a shift register inside the receiver. After all bits are received, the original byte is correctly ordered.

Eg;

```
Data: 0x53
Data Bits: 01010011
```

```
Bit Positions: b7 b6 b5 b4 b3 b2 b1 b0
               0  1  0  1  0  0  1  1
```

```
Transmission order :
Start bit → b0 → b1 → b2 → b3 → b4 → b5 → b6 → b7 → Stop bit
```

Parity Bit

In UART communication, parity bit is used as a simple error detection mechanism to ensure reliable data transmission. The parity bit is an additional bit appended to data bits before the stop bit during transmission. Its value is determined by the number of 1's present in the data bits. The purpose of the Parity bit is to detect the single-bit errors that may occur due to the noise or interference in the communication channel.

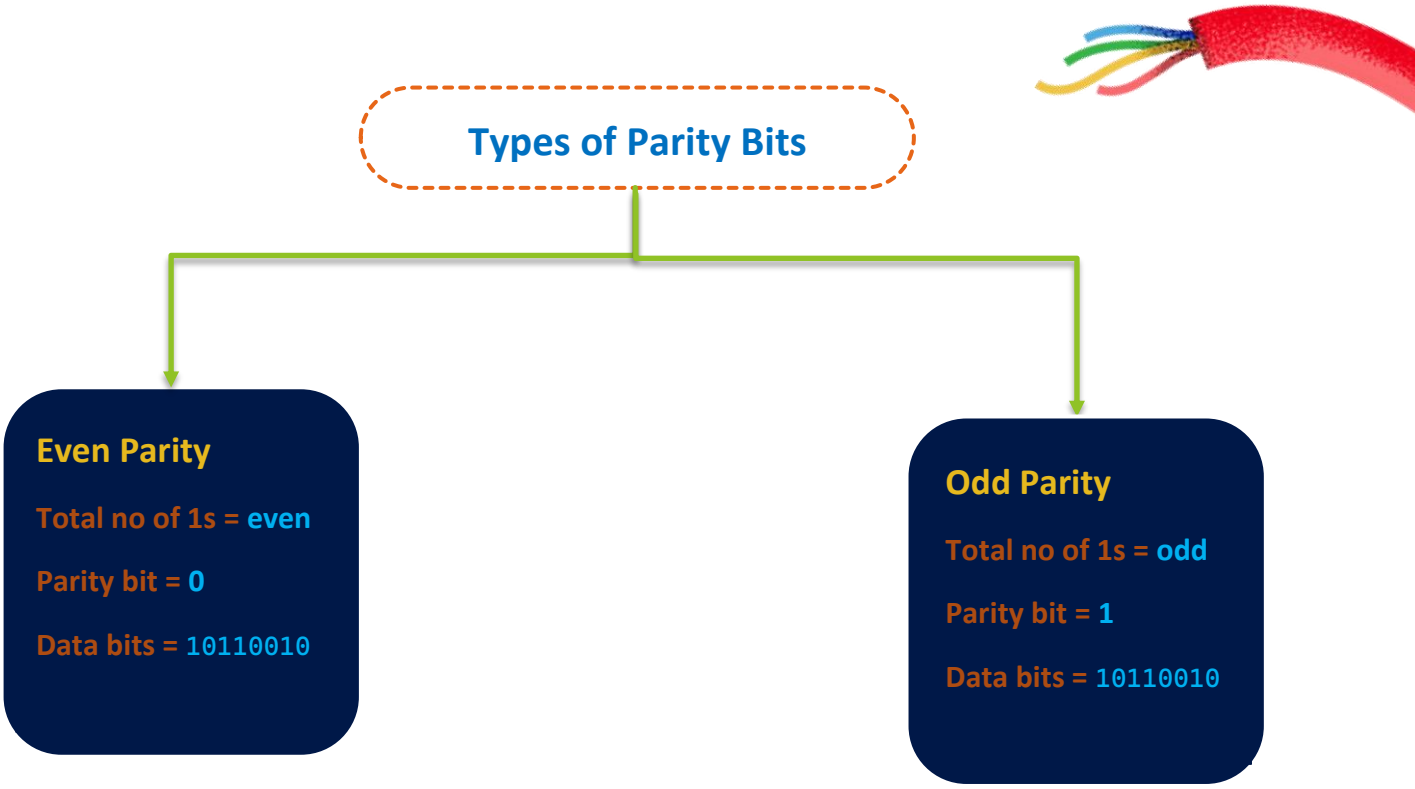

How error detection works?

When the receiver receives the data, it recalculates the parity based on the received data bits and compares it with the received parity bit. If the calculated parity does not match the received parity bit, error flag is risen indicating that the data may be corrupted.

Note: Parity bit can't detect the two-bit error and burst error.

Stop Bit

Stop bits are the last bit of data frame format and are send after the data bits to inform that the data frame is end. The Stop bit will make the receiver to come back to idle high state after the transmission. Stop bits are usually logic high (1). Stop bits marks the end of Data frame.

UART Communication Methods

UART (Universal Asynchronous Receiver / Transmitter) communication supports different communication methods based on the direction and flow of data transmission between devices. These methods define how the data is exchanged and are selected according to system requirements such as complexity, speed, and hardware constraints.

Simplex Communication

In Simplex communication, data is transmitted in only one direction. One device act as transmitter and other devices which are connected to the transmitter are act as receiver only. There is no provision for feedback or response from the receiving device. Simplex communication is used in data broadcasting and sensor output transmission to the MC's (Microcontrollers) applications.

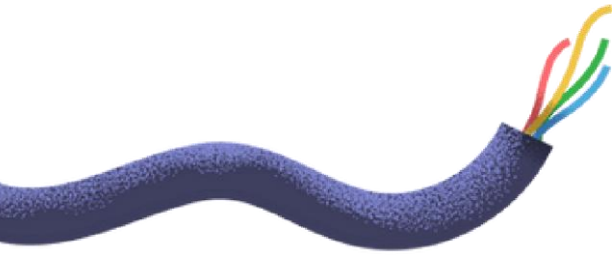

Half-duplex Communication

In Half-duplex communication, data can be transmitted in both the directions but not simultaneously. At an instant, any one device can transmit and other can receive. Half-duplex communication method requires coordination between the devices to avoid data collision. It is widely used for maintaining the hardware simplicity.

Full-Duplex Communication
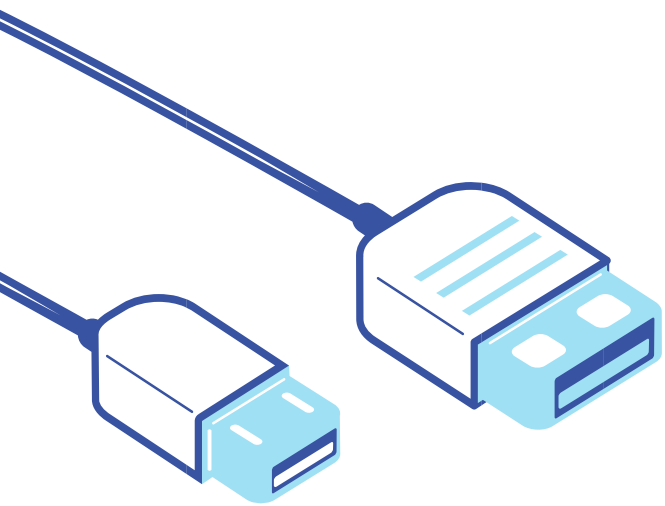
Full-duplex communication allows simultaneous data transmission and reception of Data between two devices. UART typically operates in full-duplex mode using separate transmit (Tx) and Receive (Rx) buses, which enables the efficient and continuous data exchange. This method is widely used due to its reliability and higher data output.