Field Performance Analysis and Curated Dataset Development for Duplex LoRa-CAN Telemetry in World Solar Challenge Convoy Environments

Ruben Croall[1], William Olsson[1], Daniel H. Pohren[2], Alexandre dos S. Roque[1,2], and Edison P. de Freitas[1,2]
[1]*School of Information Technology, Halmstad University, Halmstad, Sweden*
[2]*Federal University of Rio Grande do Sul, Porto Alegre, Brazil*
rubcro20@student.hh.se, wilols20@student.hh.se, daniel.pohren@ufrgs.br, ale.roque@hh.se, edison.pignaton@hh.se

***Abstract*—The World Solar Challenge (WSC) requires efficient telemetry between solar cars and their trailing support vehicles. Real-time CAN bus data is vital for strategy and fault detection. While LoRa radio shows promise for low-power wide-area links, a gap persists in public, comprehensive duplex LoRa-CAN datasets for solar racing convoys. This paper addresses this by presenting a curated duplex LoRa-CAN dataset for WSC scenarios. It is conducted a rigorous, repeatable measurement campaign, emulating real-time solar car CAN traffic over a point-to-point LoRa link using ESP32-S3 nodes. Adhering to ETSI standards, experiments systematically varied LoRa physical-layer parameters across 0-125m (6.25m resolution) with a 2-second transmission interval. The methodology aimed at assessing packet loss, energy consumption, and signal strength yielded detailed CAN payloads and LoRa metadata. This resource defines the WSC convoy telemetry scenario and provides a rich dataset with derived metrics. Invaluable for WSC strategy tools, it advances research in low-rate connected cars telemetry, link adaptation, and energy-aware communication. The results show... [insert a key numerical result here, e.g., a robust packet delivery rate of xx% for SF7 at distances up to 75 meters, with an average energy consumption of X J per packet, any numerical info.]**

***Index Terms*—LoRa, CAN, ESP32, energy efficiency, signal strength, RSSI, packet loss, spreading factor, signal bandwidth, World Solar Challenge.**

I. Introduction

The World Solar Challenge (WSC) is a 3,021 km race from Darwin to Adelaide, Australia, where solar-powered vehicles must balance energy, speed, and safety over several days under strict regulations on vehicle configuration, escort vehicles, and communication [1], [2]. The race rules require a trailing support car to follow the solar vehicle, where more power and computation are available for visualisation, logging, and strategy tools. In this setting, a reliable telemetry link from the solar car to the trailing vehicle is a basic requirement.

Modern electric and solar vehicles are increasingly treated as connected IoT nodes, where sensors, control units, and backend services form an Internet of Vehicles that supports eco-routing, fleet management with energy optimisation [3]–[5]. Inside the vehicle, the Controller Area Network (CAN) bus is the standard in-vehicle network for powertrain, battery, and body controllers, representing therefore the natural data source for telemetry [6]. CAN logs have already been used for driving behaviour analysis and eco-driving studies [7] and for machine-learning-based efficiency improvements in electric vehicles [8]. In solar racing, the same classes of signals are needed for strategy and fault detection, but under much tighter energy constraints.

Long Range (LoRa) radio is a common physical layer for low-power wide-area IoT networks. It uses chirp spread spectrum and configurable physical-layer parameters such as spreading factor, signal bandwidth, coding rate, and transmit power to trade data rate and airtime against receiver sensitivity and range [9]. Surveys of LoRa and LoRaWAN position it as a good match for small, delay-tolerant payloads where long range and low energy use are more important than throughput [10]. Measurements on ESP32-based and Heltec ESP32-based LoRa boards show that LoRa can achieve significantly lower energy per useful bit and better coverage than WiFi or Bluetooth on the same hardware in low-rate IoT scenarios [11], [12]. Diverse vehicular studies confirm that LoRa can sustain useful packet delivery ratios for moving vehicles over hundreds of metres [13]–[15]. In this work, LoRa is applied only at the physical layer in a point-to-point link (no LoRaWAN MAC), to keep the system simple and controllable during experiments.

In a previous study, LoRa was evaluated for CAN-over-LoRa telemetry in a solar racing car and a trailing vehicle, identifying workable operating points (e.g., SF7 at 0–50 m and SF8 at 50–125 m at 62.5/125 kHz) and measuring energy per packet under static outdoor conditions [**?**]. That study confirmed feasibility and provided an initial "envelope" of settings, but it did not release the underlying traces, and it only sampled a coarse distance grid and a limited set of physical-layer configurations.

At the same time, the broader LoRa literature has produced datasets and measurement campaigns that focus on physical-layer behaviour, device fingerprinting, and special-purpose applications such as avalanche search and rescue [16], [17]. These resources offer high-quality RF observations but are not linked to in-vehicle networks or convoy-style telemetry workloads, and to the best of our knowledge, there is still no public dataset that combines duplex LoRa traces with the originating CAN bus traffic in a solar racing context.

The authors thank the Future Industry Research Program and the ELLITT Strategic Research Network for the funding.

This paper addresses that gap by designing and collecting a curated duplex LoRa–CAN dataset tailored to the World Solar Challenge trailing-car scenario. We emulate the solar car CAN traffic, transmit it over a LoRa link between ESP32-S3-based nodes at distances from 0 m to 125 m in line-of-sight, and log both the CAN payloads and LoRa metadata over a systematic grid of spreading factors, signal bandwidths, coding rates, and transmit power levels. The resulting dataset is designed to support questions about packet loss versus distance and configuration, energy-per-packet and energy-per-bit on the ESP32 platform, in addition to the impact of motion and interference, while remaining practical to store and process.

Concretely, this work:

- defines a WSC-inspired convoy telemetry scenario and the associated regulatory and performance requirements for a LoRa-based CAN link between a solar car and a trailing vehicle;
- designs and documents a repeatable measurement campaign that probes distances from 0 to 125 m with 6.25 m resolution over an expanded LoRa physical-layer grid; and
- releases a curated duplex LoRa–CAN dataset with derived features such as packet delivery ratio, average RSSI and energy per packet, together with initial analyses that illustrate how the dataset can be used.

The dataset is intended both for direct use in the Halmstad University Solar Team's WSC strategy tools and as a public resource for further research on low-rate vehicular telemetry, link adaptation and energy-aware communication protocols.

The remainder of this paper first reviews background and related work in Section III, including IoT telemetry in electric and solar vehicles, LoRa and LPWAN for vehicular telemetry, the CAN bus as an in-vehicle data source, and energy and information-freshness aspects of LoRa parameter tuning. Section IV then describes the proposed communication approach, requirements, dataset design and measurement setup. Section **??** presents preliminary analyses of packet loss, RSSI and energy based on the collected data, and Section IX concludes with lessons learned and directions for future work.

II. Background

The background covers IoT telemetry in electric and solar vehicles, LoRa and LPWAN for vehicular telemetry, the CAN bus as the invehicle data source, and the energy and information freshness aspects of LoRa parameter tuning, before highlighting the lack of publicly available duplex LoRa CAN datasets.

A. IoT Telemetry in Electric and Solar Vehicles

Electric and solar vehicles are increasingly treated as connected IoT nodes. Sensors, control units and backend services are tied together in an Internet of Vehicles setting to improve efficiency, safety and sustainability [3]–[5]. The vehicle sends a stream of measurements such as speed, state of charge, temperatures, power flows and position, while roadside units and cloud platforms use the data for eco-routing, charging coordination and fleet management [3], [4]. In this view, a reliable telemetry link is a basic requirement.

Inside the vehicle, the Controller Area Network (CAN) bus is the standard network for powertrain, battery and body controllers and is the natural data source for telemetry [6]. CAN logs have been used for driving behaviour analysis and eco-driving studies, where signals from production cars are collected in normal traffic [7]. Real-time telemetry from electric vehicles has also been combined with machine learning to optimise energy usage and support driver assistance through predicted consumption and simple strategy recommendations [8].

Solar racing adds tighter energy and reliability constraints. In events such as the World Solar Challenge, teams must balance energy, speed and safety over several days while following regulations on vehicle configuration, escort vehicles and communication [1], [2]. Telemetry from the solar car CAN bus is typically forwarded to a trailing vehicle, where there is more power and computation available for visualisation, logging and strategy tools [1]. Earlier work focuses mainly on vehicle design, route choice and power management [1], while the communication path that carries this CAN data is often taken for granted. In this project we study that path explicitly through a low-rate, energy-efficient telemetry link from the solar car CAN bus to the trailing vehicle.

B. LoRa Communication for IoT Applications

Long Range (LoRa) radio is widely used as a physical layer for low power, wide area IoT networks. It uses chirp spread spectrum modulation and configurable parameters such as spreading factor, bandwidth and coding rate to trade data rate and airtime against receiver sensitivity and range [9]. Surveys of LoRa and LoRaWAN position it as a good match for small, delay tolerant payloads where devices send short status messages rather than continuous high rate streams, and where long range and low energy use are more important than throughput [10]. In this setting LoRa provides kilometre scale coverage at a few hundred bit per second up to several kilobit per second, depending on configuration [9].

These properties are attractive for telemetry between a solar car and a trailing vehicle. The application only needs to send a small subset of CAN signals every few hundred milliseconds or seconds, while the available communication power on the solar car is limited. Measurements on Heltec ESP32 LoRa boards show that LoRa can achieve significantly lower energy per useful bit and better coverage than WiFi or Bluetooth on the same hardware, especially when the link budget is tight [11]. At the same time, recent work on parameter selection and power control demonstrates that energy efficiency and reliability can be improved further by adapting spreading factor, bandwidth, coding rate and transmit power to the environment and traffic pattern [18], [19].

Several authors have proposed and evaluated LoRa based schemes for vehicular communication. A LoRa based V2X architecture has been introduced for exchanging low rate messages between vehicles and roadside units with a focus

on reliability and energy use [13]. Experimental studies with cars on the move confirm that LoRa can sustain useful packet delivery ratios for vehicle to vehicle links over hundreds of metres, while highlighting the impact of spreading factor, antenna placement and mobility on performance [14]. Together these works indicate that LoRa is a realistic candidate for low rate vehicular telemetry. Our work places this choice in the specific context of a solar racing car and a trailing support vehicle and focuses on how LoRa configuration and send interval influence packet loss and energy consumption on that short range link.

C. LoRa Physical Layer, Propagation, and Channel Challenges

The LoRa physical layer exposes several parameters that strongly affect performance, mainly spreading factor, signal bandwidth, coding rate and transmit power. Increasing the spreading factor extends receiver sensitivity and range but also increases airtime and reduces throughput, while narrower bandwidth and higher coding rate give similar robustness versus airtime trade offs, so rate, range, airtime, interference footprint and energy per useful bit are tightly coupled [9], [10]. Propagation and channel effects further complicate this picture. Analytical work on LoRa under multipath and co-channel interference shows how path loss, fading and overlapping transmissions degrade symbol error rate and coverage, and that the apparent orthogonality between spreading factors can break down in realistic conditions [20]. Receiver-side techniques and modified modulation schemes, such as block interleaved chirp spreading, improve robustness over multipath channels by spreading symbols across time and frequency [21], [22], and recent analyses of multi-RIS-aided LoRa show that deploying several RIS panels while accounting for outdated and imperfect channel state information can significantly improve coverage, delay outage and bit-error performance over fading channels [23]. Forward error correction and coding rate also shape performance: stronger coding improves reliability but increases Age of Information when packets become longer and more frequent [24].

Field measurements confirm that these effects matter in practice. Urban experiments report how spreading-factor selection shapes coverage and packet delivery in non-line-of-sight streets and around buildings, with higher spreading factors extending range but increasing airtime and collision probability when many nodes share the channel [10], [25]. Vehicular LoRa studies show strong sensitivity to antenna placement and mobility, with packet delivery ratios changing as vehicles move, turn or become partially shadowed, and propose mobility-aware adaptive data rate schemes and link adaptation algorithms such as LMLoRa to improve packet delivery and energy efficiency for moving end devices [14], [15], [26], [27]. In a convoy-style solar racing scenario the link between the solar car and the trailing vehicle is relatively short but still exposed to motion, occasional shadowing and external interference, which motivates an explicit study of how different spreading factors, bandwidths and transmit powers behave on that link and how these choices influence packet loss and airtime over distances up to 125 m.

D. CAN Bus in Automotive Data Collection

The Controller Area Network (CAN) bus is the dominant in vehicle network for exchanging data between electronic control units in both conventional and electric vehicles. It links powertrain controllers, battery management systems, body electronics and dashboard units over a shared differential bus with priority based arbitration, which makes it the natural place to access internal vehicle signals [4], [6]. Typical frames expose vehicle speed, accelerator position, torque, gear selection, temperatures and pressures, as well as battery state of charge, voltages and currents in electric vehicles [4], [8]. Additional messages capture driver inputs, stability and braking activity and comfort functions, and even a limited subset of these signals is sufficient to analyse driving behaviour and traffic patterns from CAN logs [7].

Recent work places CAN logging inside an Internet of Vehicles and industrial IoT stack, where CAN remains the in vehicle backbone and selected signals are forwarded via gateways to cloud platforms for fleet management, diagnostics and energy optimisation [3], [4], [28]. Rao et al. show how real time telemetry derived from CAN can feed machine learning models that improve electric vehicle efficiency [8]. In a solar racing setting the same types of signals are needed for strategy and fault detection, but under much tighter energy constraints, so in this work we follow the common pattern of treating the car's CAN bus as the primary data source and focus on how a small selected subset of those signals can be forwarded reliably and energy efficiently over a LoRa link to the trailing support vehicle.

E. Energy, Information Freshness, and Parameter Tuning in LoRa Networks

Energy use, reliability and throughput in LoRa networks are tightly linked to physical layer parameters. Higher spreading factors, narrower bandwidths and stronger coding rates increase reception probability but also airtime and capacity usage [9]. Rate, range, airtime and energy per useful bit are therefore coupled [9], [10], [29]. Age of Information (AoI) adds a freshness constraint: stronger forward error correction can lower packet loss but longer packets and airtime may worsen AoI under realistic traffic, and there exists a coding rate that minimises AoI for a given SNR [24].

These trade offs motivate adaptive parameter selection and power control. In LoRa-based wireless underground sensor networks, energy-efficiency frameworks such as EnergySaver choose spreading factor, bandwidth, coding rate and transmit power to maximise energy efficiency under reliability constraints, using interference and collision models as guidance [18]. MEC-aided LoRa analyses extend this with power-control policies that shape coverage probability, offloading success and energy efficiency [19]. For mobile nodes, mobility-aware adaptive data rate schemes based on channel estimation or Kalman filtering track the varying channel while

avoiding overly conservative high spreading factors [26], and recent work explores lightweight reinforcement-learning-based schemes where devices select channel and transmit power from ACK feedback in distributed LoRa networks [30], as well as matching-driven deep reinforcement learning for joint channel, spreading factor and power allocation in multi-gateway deployments to maximise system-wide energy efficiency [31].

These ideas have been examined on hardware similar to what we use. Measurements on Heltec ESP32 LoRa boards show that LoRa achieves lower energy per delivered report and better coverage than WiFi or Bluetooth on the same device class [11], and comparisons on ESP32/SX1278 devices report similar advantages in low-rate IoT scenarios [12]. ESP32-based monitoring and battery management systems further illustrate how low-power microcontrollers and LoRa radios are combined for long-lived sensing [32], [33]. Together, these results motivate treating the LoRa physical-layer parameters and the send interval as key variables when designing telemetry for a solar racing car and trailing vehicle. Rather than proposing yet another optimisation or adaptive data rate scheme, in this work we expose exactly these parameters in a controlled measurement campaign so that packet loss, RSSI, airtime and energy consumption can be analysed systematically on ESP32-based nodes in a WSC-inspired scenario.

F. LoRa Datasets and Remaining Research Gaps

Existing public LoRa datasets mainly target static or infrastructure oriented deployments. One dataset provides RF traces from multiple devices in indoor, outdoor, and cabled setups to study device fingerprinting and the robustness of deep learning classifiers to deployment changes [16], while another focuses on avalanche search and rescue with large scale RSSI and SNR measurements and detailed snow condition ground truth [17]. These resources offer high quality physical layer observations but are not linked to in-vehicle networks or telemetry workloads.

Vehicular LoRa studies typically report aggregate metrics rather than releasing raw traces. Field tests in V2V and V2I scenarios present packet delivery ratio, RSSI, and coverage for moving vehicles under different spreading factors and antenna placements, showing that LoRa can maintain useful links in motion [14], [15]. Reviews of IoT connectivity for automotive applications and smart green IoV emphasise protocol choices and V2X architectures [3], [4], and surveys on scalable LoRaWAN discuss data driven optimisation and congestion control based on operator traffic [9], [10]. To the best of our knowledge, there is still no public dataset that combines duplex LoRa traces with the originating CAN bus traffic in a convoy style setting such as a solar racing car and trailing support vehicle. This work addresses that gap by collecting paired CAN–LoRa data from controlled tests with varying distance, speed, interference, and configuration, together with energy measurements on ESP32-based telemetry nodes, resulting in a curated duplex LoRa–CAN dataset rather than a new optimisation or protocol design.

III. Related Work

Vehicular LoRa (field evidence): Real vehicle-to-vehicle and vehicle-to-infrastructure trials show how motion and LoRa PHY settings (especially SF) affect PDR and RSSI, establishing feasibility and baseline operating ranges for mobile telemetry. This motivates our PER-vs-distance runs and the subset of both-nodes-in-motion tests we add here.

Energy/latency tuning (SF, SBW, CR, power): Recent work quantifies the energy–airtime–latency trade-offs across SF/SBW/CR and transmit power, including explicit Age of Information (AoI) effects of forward error correction. These results justify our expanded parameter grid (adding 250/500 kHz) and our Joules-per-packet analysis.

Interference and multipath robustness: Analytical and experimental studies explain co-/inter-SF interference, capture effects, and multipath ISI in LoRa; others propose PHY-level mitigations. We use these to interpret loss spikes, discuss antenna placement, and frame limitations in non-LOS/urban settings.

Adaptive Data rate (ADR): Optimisation approaches indicate that adapting SF, SBW, and TX power improves reliability and energy efficiency under changing link conditions. This supports our receiver-guided policy that maps RSSI to SF, SBW and TX power with hysteresis (and optional AoI tracking). However, this optimisation is only performed under static conditions while this research explores a more dynamic approach [34].

Coverage extension (future-looking): Relay/mesh designs along linear routes offer range/coverage options beyond a single trailing car; we reference these when outlining future pilots for race-route scale-up.

EF-LoRa: Energy Fairness (EF) research in LoRa explores allocating resources in multi-gateway networks by investigating SF properties [35].

Our prior baseline: We build directly on the previous CAN-over-LoRa study for solar car racing, which identified workable operating points (e.g., SF7 at 0–50 m; SF8 at 50–125 m at 62.5/125 kHz) and measured energy per packet [36]. The present work adds 6.25 m distance resolution, higher bandwidths (250/500 kHz), rigorous PER with confidence intervals, mobility and endurance trials, resulting in a released non-simulated dataset.

IV. Proposed IoT Communication Approach

Efficient CAN bus communication in solar cars faces several challenges. High-energy communication models are impractical for energy-constrained solar-powered vehicles [3].

LoRa offers a promising low-power solution, even though its effectiveness in real-time CAN data collection remains untested, and it comes with several challenges, as motivated in Section I. Assessing LoRa's ability to transmit CAN-based data over 6.25–125 m with minimal packet loss, energy consumption, and reliable signal strength is essential for improving solar vehicle telemetry.

A. Application Scenario

The WSC regulations require a car to trail the solar-powered racing car at all times [2] by a recommended distance of $v \times 3\ (s)$, where v is the solar car's velocity. The velocity of the race car can theoretically reach speeds of up to $150\ km/h$, but will be limited by the speed limits of $80 - 110\ km/h$ on the highways in Australia during the WSC. This means the data transmitted from the vehicle must be picked up at distances of up to $\sim 100\ m$, given the 3-second rule.

A sufficient scenario is to transmit and receive data about the solar car at *least* every 2 seconds, allowing for near real-time analysis, driver communication, and post-race optimisation. This interval was chosen to safely stay within the duty cycle margin, as faster transmission could disrupt the wireless medium in that area, and slower rates risk delaying important data changes.

B. Regulations

Since this experiment operates in the sub-GHz spectrum, there are specific rules and regional parameters that must be followed. LoRa is regulated under the ETSI ECO/REC 70-03 documentation regarding SRDs [37], which, for the 863-868 MHz range (the allowed frequencies to operate LoRa in Sweden , [38]) this falls under the ETSI EN 300 220-2 standard for wideband data transmission systems [39]. The transmission that configures SF, SBW, TX power, and duty cycle to experiment and collect data for LoRa CAN transmission must follow these standards. However, staying within the most common allowed duty cycle of 1% can be difficult as it would greatly increase the testing time, since it's known that higher SF and lower SBW will increase airtime. The ETSI standard has defined different sub-bands and their respective maximum duty cycles, so for this work, the sub-band that allowed the highest duty cycle was chosen. Therefore, this work was limited to the following ranges according to ETSI 300 220-2 standard sub-band P:

- Operational Freq. Band: 869.400-869.650 MHz
- Max. effective radiated power: 500 mW ($\approx$ 27 dBm)
- Duty Cycle: $\leq$ 10%
- Max. occupied BW: The whole band

These parameter ranges were extracted from table *B.1* in the *ETSI EN 300 220-2 - V3.2.1* document [39].

The experiments will adhere to these standards and regulations. It could, however, be argued that, because these ETSI standards are for continuous operation, a temporary experiment like this one can operate above the recommended limits.

C. Requirements

As stated before, in the WSC, a trailing car follows the solar vehicle at up to about 100 m, requiring reliable telemetry. A stable LoRa connection is maintained when the RSSI is between -65 dBm and -75 dBm [11]. Lower RSSI values compromise reliability, but may still allow for data transfer up to -148 dBm [40, p. 10].

Each message varies in length because it includes a timer in milliseconds, so each packet is between 36-38 characters (36-38 bytes) when transmitted, well below LoRa's 27 kbps data rate [41], allowing transmissions without bandwidth constraints. An SF of 7–9 at a 2-second interval balances energy efficiency and reliability [42]. Power consumption per transmission should be around 0.127J, significantly lower than WiFi telemetry (0.243J) [11]. Increasing SF to 10-12 extends range but raises energy consumption while reducing throughput [29]. Spreading factor represents the number of bits per chirp. A large spread factor results in low data rate and long communication range, e.g., for SBW of 125kHz, by setting the SF to 7 or 12, the data rate is 5.47 kbps or 0.25 kbps, respectively [35].

LoRa optimises power efficiency with deep sleep mode, lowering idle consumption to 2µA [33]. SBW selection impacts data rate and sensitivity: lower bandwidth (62.5 kHz) improves sensitivity, while higher bandwidth (125 kHz) increases data rate but reduces weak signal detection [42]. These trade-offs, shown in Tab. I, are key to maximising WSC telemetry efficiency.

Considering the maximum duty cycle of 10%, as discussed in the previous subsection IV-B, it is required to adjust the time interval between transmissions so as not to exceed that limit.

V. Design of the Dataset

Building on the gap identified in Section II-F, the dataset is designed to extend the previous validation experiments by systematically exploring how a LoRa link behaves when it carries real CAN traffic over different distances and physical-layer configurations. The focus is on a trailing car scenario where a support vehicle must reliably receive telemetry from a solar car while keeping the ESP32 LoRa nodes energy efficient. Existing public LoRa datasets either target static infrastructure or do not include in-vehicle network traffic; in contrast, this dataset centres on LoRa-based telemetry for a solar car convoy and on associated energy measurements. As in recent CAN datasets such as CAN-Modes and can-train-and-test, we aim for a clearly documented acquisition setup, scenario labels, and both raw logs and processed tables for reuse [43], [44]. The overall workflow of the dataset design is summarised in Fig. 1.

To ensure quality, we follow the same principles as these curated CAN datasets and clearly design for relevance, reproducibility, verifiability and the usability of the actual data [43], [44]. The dataset size is also chosen to be large enough for statistical analysis and machine-learning-based studies while remaining practical to store and process.

We plan to probe distances from 0 m up to 100 m, with distance points spaced by 6.25 m. At each distance point, the transmitter and receiver are placed in line-of-sight on a straight road, and a fixed set of LoRa parameter combinations is exercised. The design uses spreading factors 7–12 together with four signal bandwidths (62.5, 125, 250, and 500 kHz), and three transmit powers (TP): 2, 12, and 22. Some configurations were skipped as they would prove unnecessary and

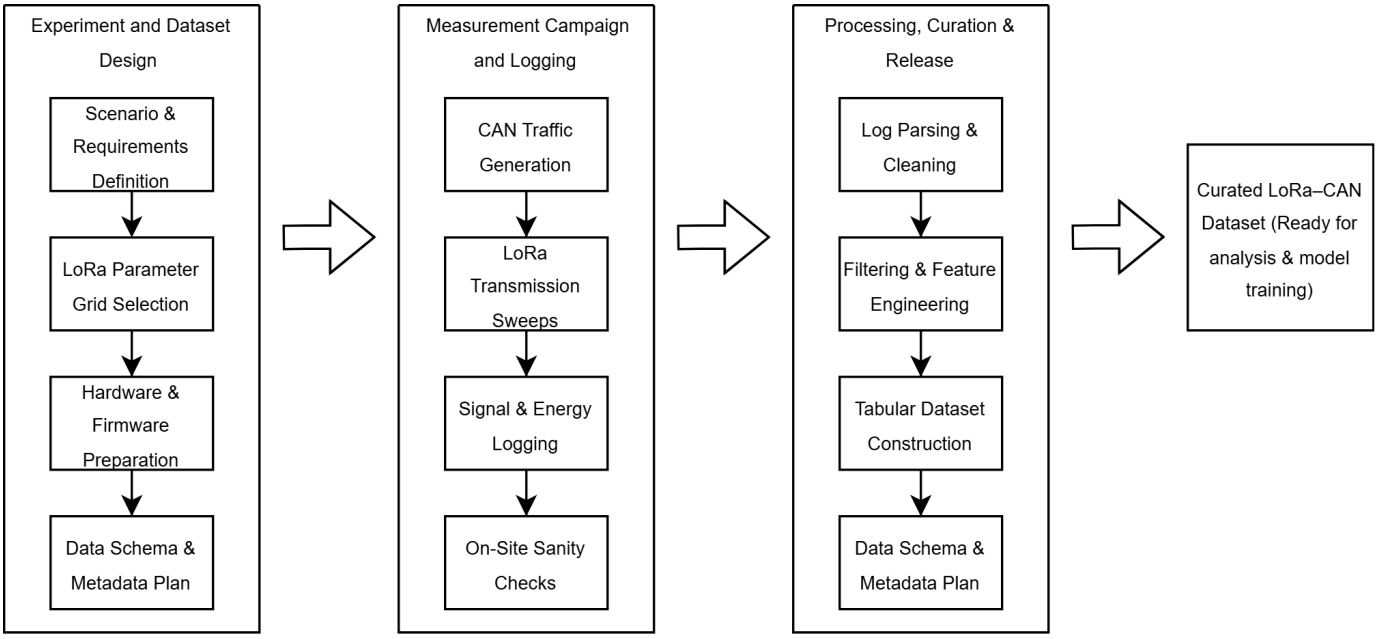

Fig. 1: Workflow of the LoRa–CAN dataset design, from experiment planning (Stage I) through measurement (Stage II) to processing and release (Stage III).

time-consuming (see V-B), resulting in 63 configurations per distance. For each configuration, we target at least 100 CAN messages (to obtain a stable estimate of packet delivery ratio and average RSSI per setting), so the final dataset contains on the order of tens of thousands of packets across all distances and settings.

A. Features and engineered attributes

For each transmission attempt, we log a timestamp, an experiment identifier, distance, and CAN data; the configured LoRa parameters (spreading factor, bandwidth, transmit power); and the received signal strength indicator (RSSI). RSSI is post-processed using the same Kalman filter used in our earlier experiments, along with a Simple Moving Average (SMA). From these raw signals, we derive a small set of engineered attributes that are most important for our analysis: a success-or-loss flag based on sequence numbers, a compact configuration identifier, distance labels, and per-run aggregates such as packet delivery ratio, average RSSI, and energy per packet. These features are chosen to directly support questions about packet loss versus distance and LoRa settings, as well as energy–reliability trade-offs on the ESP32–LoRa platform.

B. Curated dataset structure

The raw logs from the ESP32 receiver are converted into a tabular dataset, where each row represents one packet with all associated features and engineered attributes. Before conversion, we perform basic sanity checks on the logs so that the tables form a curated dataset rather than a raw serial dump, following the curation strategies used in CAN-Modes and can-train-and-test [43], [44]. The processed data are organised into subsets by distance and by LoRa configuration, making it straightforward to run both simple statistical analysis and future machine-learning-based studies. The full design space

TABLE I: Minimum and Maximum Requirements for LoRa-Based CAN Transmission

Parameter	Min / Max req.	Notes
Range	6.25 m / 100 m	Typical trailiing distance in WSC [2]
RSSI	- dBm / -40 dBm	Stable for ESP32 LoRa [11]
Duty Cycle	0.1% / $\leq 10\%$	Following ETSI standards [39]
Tx Interval	0.1 / 2 (s)	Balances real-time data & energy use [42]
Payload Size	0.252 kB / $\leq$ 27 kB	Accomodates LoRa's low data rate ($\leq 27kbs$) [41]
Spreading Factor (SF)	SF7 / SF12	SF7–SF9 for best signal strength at these distances [42]
Signal Bandwidth (SBW)	62.5 kHz / 500 kHz	Higher BW improves data rate but lowers sensitivity [42]
Tx Power (TP)	2 / 22	Directly influences RSSI (see eq. **??**), but uses more energy.
Energy per Transmission	Minimally / ≤ 0.8 J	WiFi is 2x more power-intensive [11]

may not be covered in the first iteration; if only a subset of distances or configurations is collected, the logging format and feature set remain unchanged so that additional experiments can be added later without breaking the dataset structure.

VI. Validation Experiments

This section describes the system setup, technical implementation, and communication methodology used in this study.

A. Experimental Setup

The experimental setup, presented in Figure **??**, consists of an Arduino R4 Nano, which creates and sends *CAN 2.0B* data through an SN65HVD232 transceiver to an ESP32S3 mounted on a custom-made PCB to simulate real CAN from a solar-powered vehicle. The CAN messages are then translated to Unicode and transmitted by an SX1276 LoRa module through an isotropic antenna. At the receiving end, another ESP32S3 mounted on an identical custom PCB receives the transmitted data on an identical setup. The receiver then stores the data and sends it via the serial output for an external device to read. The sender and receiver use an antenna tuned for 860-890 MHz, with the radio frequency (RF) set to 869.4 MHz, which falls within the allowed range in Sweden [38]. However, in Australia, antennas that operate at 915-928 MHz are required [41]. Tx power was configured to 2, 12, and 22 dBm using the `LoRa.h` library. Note that the LoRa module (Sx1276) has a maximum TX power of +20 dBm, which is internally clipped if a higher value is provided. All configurations use the high-power PA output (PA_BOOST) across the entire band to ensure consistent hardware configurations. It should be noted that the Sx1276 also provides a low-power RFO output with support for up to +14 dBm [40, p 88].

1) Custom Printed Circuit Board: The custom PCB includes holes for the ESP32S3 pins, with traces to the LoRa module and an RF connector.

2) Sender and Receiver: Both units use the same setup: a custom PCB with an ESP32S3 and LoRa module mounted on it. They also use an isotropic antenna, tuned for 860-890 MHz, connected to a soldered male RF connector on the PCB. The units are connected to a computer that enables monitoring and communication with the microcontroller using a serial relay.

3) CAN generator: The CAN data is generated on an Arduino Nano R4 and copied from the actual values that would be generated in the solar car. This is necessary because the packets from this test and the actual data will then be of equal size. The constructed CAN data is then transmitted through an SN65HVD232 transceiver, and then two cables representing CAN high and low, followed by another transceiver connected to the ESP32S3 on the senders PCB.

Fig. 2: Add picture of our hardware setup

B. Data Creation and Collection

Firstly, CAN 2.0B messages (29-bit identifier, 8-byte payload) [6] were read by the transceiver and processed on the ESP32. Identifiers determine whether data is read bitwise or via *little-endian* (4-byte segments) with lower binary value holding priority [6]. The CAN data transferred in this project contained artificial data about current velocity, total distance travelled, battery voltage and current, battery cells' high, low, and average voltages, the battery cells' high, low, and average temperatures, ID of battery cells with the highest and lowest temperatures, temperature of the BMS, MC current and temperature, motor temperature, and wattage from three MPPT's followed by the total sum of watt's generated form the MPPT's. The values and their respective CAN identifiers are described in Table II.

TABLE II: CAN signals created and decoded in the system, grouped by identifier.

Signal	CAN ID	Bytes	Notes
Motor Current	0x402	4–7	float (little-endian)
Velocity	0x403	4–7	float (little-endian)
MC Temperature	0x40B	4–7	float (little-endian)
Motor Temperature	0x40B	0–3	float (little-endian)
Distance Travelled	0x40E	0–3	float (little-endian)
BMS Temperature	0x601	1	uint8
High Cell Temperature	0x601	2	uint8
Low Cell Temperature	0x601	3	uint8
Avg Cell Temperature	0x601	4	uint8
High Temp Cell ID	0x601	5	uint8
Low Temp Cell ID	0x601	6	uint8
Battery Current	0x602	0–1	signed 16-bit / 10
Battery Voltage	0x602	2–3	uint16 / 10
Low Cell Voltage	0x602	4–5	(byte4 * byte5)/10000
High Cell Voltage	0x602	6–7	(byte6 * byte7)/10000
Avg Cell Voltage	0x603	0–1	uint16 / 10000
MPPT1 Wattage	0x200	4–7	voltOut*currentOut
MPPT2 Wattage	0x210	4–7	voltOut*currentOut
MPPT3 Wattage	0x220	4–7	voltOut*currentOut

Assigned variables are compiled into a `String` and transmitted via LoRa with selected SBW, SF, TX power, and sync word (0-0xFF) to avoid interference. The receiving ESP32, using the same configuration, parses packets and sends data, including RSSI values, through the serial port for storage and analysis.

Some configurations would prove very time-consuming if adhering to the duty cycle limits set in this paper, so the decision was made to skip testing for SF 11-12 at BW 62.5kHz and SF 12 at 125kHz. The packets at these configurations would have a Tx interval ≥ 10, and would be of no interest to use in the WSC scenario.

RSSI data was collected by configuring SF and Tx intervals across distances up to 125m (Tab. I) to determine optimal settings. SF and SBW were varied because they directly affect LoRa's performance: a higher SF increases range and receiver sensitivity but also increases transmission time, while a lower SBW improves signal detection by increasing receiver sensitivity, though at the cost of reduced data rate. Increasing the Tx power will directly affect the RSSI, but at the cost of energy consumption. A Kalman filter was applied to stabilise RSSI fluctuations, calculated as:

Fig. 3: Add picture of our test distances setup

$$\overline{x}_n = \overline{x}_{n-1} + K_n(z_n - \overline{x}_{n-1}), \tag{1}$$

where $\overline{x}_{n-1}$ is the prediction of the current RSSI, z_n is the current measured value, and K_n is the Kalman gain, computed as:

$$K_n = \frac{p_{n-1}}{p_{n-1} + r_n}, \tag{2}$$

where p_{n-1} is the estimated uncertainty from the previous prediction, and r_n is the measurement uncertainty.
The updated uncertainty p_n is then determined as:

$$p_n = (1 - K_n)p_{n-1}. \tag{3}$$

Initially, $\overline{x}_0$ and p_0 are derived from previous packets, ensuring outlier rejection and accurate data collection [26]. A SMA was also added and combined with the Kalman Filter, which has been tested and proven effective for smooth RSSI measurement (find the source for this from old paper). The SMa for sample index n is calculated as:

$$\hat{x}_n = \frac{1}{W} \sum_{i=0}^{W-1} x_{n-i}, \tag{4}$$

where $\hat{x}_n$ is the filtered RSSI value at time n, x_{n-i} denotes the i-th most recent measurement, and W the window size of the SMA filter.
To implement the SMA, a circular buffer is used to overwrite the oldest measurement when it becomes full. The sum is updated by subtracting the removed value and adding the new one:

$$S_n = S_{n-1} - x_n^{\text{old}} + x_n^{\text{new}}, \tag{5}$$

where S_n is the updated cumulative sum at step n, x_n^{old} is the replaced value, and x_n^{new} the latest RSSI measurement. The output can then be described as:

$$\hat{x}_n = \begin{cases} \dfrac{S_n}{n}, & n < W, \\ \\ \dfrac{S_n}{W}, & n \geq W, \end{cases} \tag{6}$$

The data collection process evaluated SF, BW, and TP under different conditions. Experimental runs were conducted at 6.25m intervals, starting at 6.25m, then 12.5m, continuing up to 100m, as shown in Fig. 3.
At each distance, performance was recorded for five SBWs (62.5, 125, 250, and 500 kHz), SF values 7 to 12 were tested, skipping higher SFs if the Tx interval exceeded 10 s, and TP values of 2, 12, and 22 (20).
The ESP32's serial interface enabled updates to SBW and SF during runtime, allowing for adaptive tuning without reboots and significantly reducing test duration. LoRa messages were received via the serial interface, with the ESP32 extracting metadata such as message ID, elapsed time, TX interval, CAN data, RSSI, Kalman-, and SMA-filtered RSSI.
The code for reading, transmitting, and receiving CAN-data through LoRa is available on the source-sharing platform GitHub [1].

C. Energy Consumption Measurement

With LoRa, energy consumption mainly depends on the SF, BW, payload, duty cycle, and the power consumed by the transmitter and between transmissions [45]. In the scenario described in this paper (WSC), the main concern is the energy consumed at the sender.
Energy consumption could be approximated with equation 12 with the voltage V_c from the ESP32 (3.3V), the airtime of the current configuration T_{air}, and the total estimated current drawn from the ESP32S3 and the LoRa module set at one of the TPs used, $I_{total} = I_{ESP32} + I_{SX1276}$.
1) Time on Air: The airtime depends on many parameters, and can be calculated using the following steps: First, the symbol rate T_s is calculated using the SF and BW (eq. 7). Then, the preamble length $T_{preamble}$ can be derived from eq. 8, where $n_{preamble}$ is the programmed preamble length [40, p. 19]. To calculate the payload duration (eq. 10) the number of payload symbols n_p is needed (eq. 9), where PL is the payload bytes (1-255), SF the spreading factor (6-12), CRC whether Cyclic Redundancy Check is active (1, else 0), IH whether implicit header mode is active (1, else, 0; explicit), DE whether low data rate optimisation is on (1, else 0), and CR, the code rates index, derived from using the denominator of the code rate fraction: $CR{+}4 = CR_{den}$. Lastly, the sum of the payload duration $T_{payload}$ and preamble length $T_{preamble}$ is equal to the airtime/packet duration, T_{air} (eq. 11) [40, p. 31].

$$T_s = \frac{2^{SF}}{BW}, s \tag{7}$$

$$T_{preamble} = T_s\,(n_{preamble} + 4.25), \tag{8}$$

$$\begin{aligned} &n_{preamble} = 8,\ PL = \{34, 35, ..., 39\},\ SF = \{7, 8, ..., 12\}, \\ &CRC = 0,\ IH = 0,\ CR = 6 - 4 = 2,\ \text{(Code rate = 4/6)}, \\ &DE = \begin{cases} 0, & \text{if} \quad T_s > 16\,ms \\ 1, & \text{if} \quad T_s \leq 16\,ms \end{cases}, \\ &n_p = 8 + \max\left(\left\lceil \frac{8PL - 4SF + 28 + 16CRC - 20IH}{SF - 2DE)} \right\rceil \right. \\ &\left. (CR + 4), 0 \right), \end{aligned} \tag{9}$$

$$T_{payload} = n_p \cdot T_s, \tag{10}$$

$$T_{air} = T_{preamble} + T_{payload}, \tag{11}$$

[1] https://github.com/Lobbeb/LoRa-CAN-Solar-Vehicle-Research.git

2) Current Estimation: The TP current settings were not manually measured; they were estimated from the datasheets for the Sx1276 and ESP32S3. At the TP level of +20 dBm, the current is trimmed to a maximum of 140 mA and typically measured at 120 mA, but the currents for TPs at 2 and 12 dBm are not mentioned. However, with PA output and current trimmed to $\leq 100\,mA$, they could be estimated with the help of typical currents for 17 and 20 dBm and with the assumption of reduced current at lower transmission powers to around 25 and 50 mA for 2 and 12 TP, respectively [40, tab. 51, 86]. With the ESP32-S3 RF disabled/idle (WiFi/BLE) and only the CPU active, with SPI and USB peripherals on, the I_{ESP32} current is estimated at about 40–60 mA [46, tab. 6.6].

TABLE III: Estimated and Typical Current Consumption During Transmission

Tx power (dBm)	I_{SX1276} (mA)	I_{ESP32} (mA)	I_{total} (mA)
2	20–30 (est.)	40–60	60–90
12	40–60 (est.)	40–60	80–120
22 (20)	∼120 (typ.)	40–60	160–180

Minimum/maximum energy per packet for each configuration of SF, BW, and TP could then be calculated using the following equation (eq. 12):

$$E_{pkt,min/max} \approx V_c \cdot I_{t,min/max} \cdot T_{air}, \tag{12}$$

where V_c represents the ESP32 supply voltage (12V, converted to 3.3V) and the current $I_{total,min/max}$ is the minimum/maximum total current (see tab. III). Changing SF or BW changes the high-voltage duration (i.e., airtime, T_{air}). This directly correlates with the duty cycle, i.e., the fraction of one period during which the system is active, affecting total energy consumption. Higher BW increases power use (as mentioned in Section II-E). In this setup, however, Tx intervals are set not to exceed the duty cycle limit (see tab. I), so the system will sometimes halt transmission, which can reduce BW and slightly lower power consumption. Higher SF increases the symbol rate and decreases the number of payload symbols (see eq. 7,9), thereby increasing the energy per packet.

D. Signal Strength Measurement

RSSI, which indicates the received signal strength, can be defined in a simple manner (13) [11], but in LoRa it is derived from the equation 15 if reading the last received packets RSSI (can also be read continiously), where RF is the radio frequency and $Rssi$ the modem-internal, its calculation are not documented in the datasheet [40, p. 87, 112].

$$RSSI\,[dBm] = TP + Antenna\ Gain\ - Path\ Loss, \tag{13}$$

$$RSSI_{pkt}[dBm] = \begin{cases} Rssi - 157 & \text{if} \quad RF \geq 862\,\text{MHz} \\ Rssi - 164 & \text{if} \quad RF \leq 525\,\text{MHz} \end{cases}, \tag{14}$$

The setup in this paper has RF set to 869.4 MHz, so the RFI_HF pin will be active, enabling transmissions to operate in band 1 [40, p. 11, 18]. Note also that with *LnaBoost* active

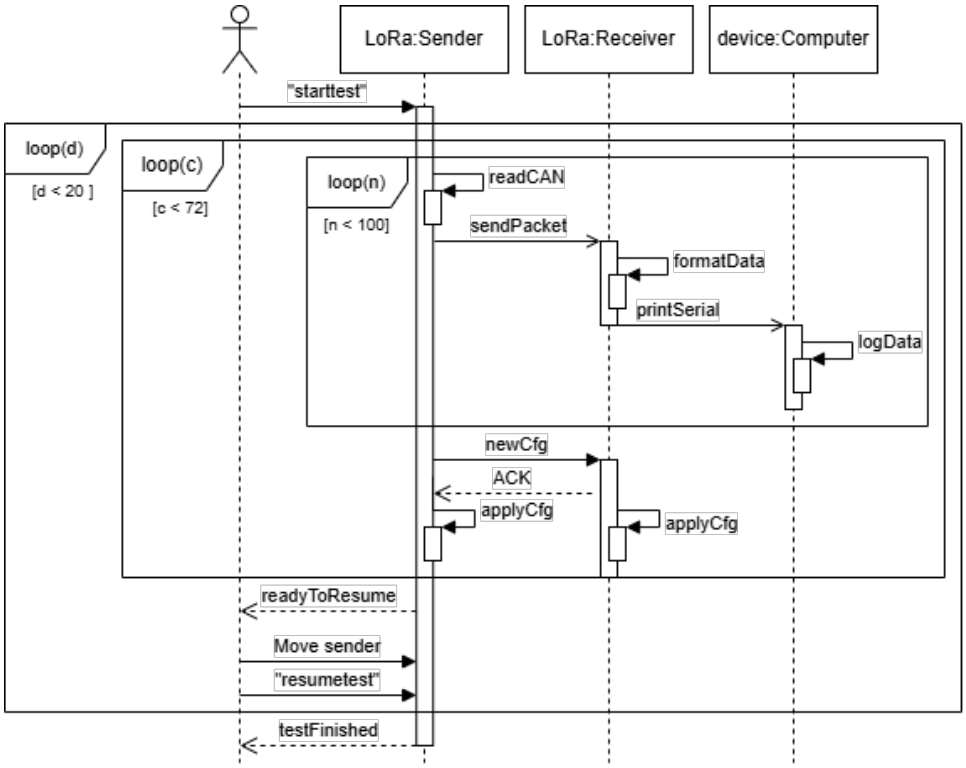

Fig. 4: Sequence UML diagram of the test for collecting the data.

at the receiver, the constants -157 and -164 could vary. When a packet is received, the receiver reads $RSSI_{pkt}$, composed from the average $Rssi$, which is continuously read. Note that at $RSSI_{pkt} > -100\,dBm$ results may diverge, and for better linearity it is recommended to use equation **??**, given that the Signal-to-Noise Ratio (SNR) ≥ 0 [40, p. 87]:

$$RSSI_{corr} = \begin{cases} 16/15 \cdot Rssi - 157 & \text{if} \quad RF \geq 862\,\text{MHz} \\ 16/15 \cdot Rssi - 164 & \text{if} \quad RF \leq 525\,\text{MHz} \end{cases}, \tag{15}$$

This RSSI is measured at different distances from the sender to the receiver. With race speeds up to 120 km/h and the receiver car trailing by 3 seconds, measurement distances were set on those values. This resulted in recorded measurement points at $d_i = 6.25\,i$ meters where $i = 1, 2, 3, ..., 16$.

E. Empirical Data Analysis

The performance metrics RSSI, Tx interval, PER, and energy consumption per packet were analysed by examining their averages and standard deviations for each combination of SF, BW, and TP at each distance point measured, except for energy consumption, which is not affected by distance.

To identify SF, BW and TP combinations that meet the research objectives (**??**), three factors were considered:
1) Staying within, or close to, the required RSSI margin,
2) Maintaining a duty cycle of less than 10%,
3) Minimising energy consumption (Tab. I).
4) Maximising PDR.

VII. Results

This section will contain the results of the experiments.

A. Curating the Dataset

Tracking time since transmission started by fetching the first value of the payload, which corresponds to the time since boot of the sender, setting it to 0 in the first packet received, and adding the Tx interval between packets.

B. PER analysis

VIII. Discussion

This section will discuss what the results may imply and possible future works.

IX. Conclusion

This section will contain a general paragraph, summarising the main results of our work and cite the experminets related to the WSC.

Acknowledgment

The authors thank The Future Industry Research Program and the ELLITT Strategic Research Network for the funding.

References

[1] M. Elshafei, A. Al-Qutub, and A.-W. A. Saif, "Solar car optimization for the world solar challenge," in *2016 13th International Multi-Conference on Systems, Signals Devices (SSD)*, 2016, pp. 751–756.

[2] World Solar Challenge, "Event regulations," 2025. [Online]. Available: https://worldsolarchallenge.org/event-information/regulations

[3] T. Aldhanhani, A. Abraham, W. Hamidouche, and M. Shaaban, "Future trends in smart green iov: Vehicle-to-everything in the era of electric vehicles," *IEEE Open Journal of Vehicular Technology*, vol. 5, pp. 278–297, 2024.

[4] M. A. Rahim, M. A. Rahman, M. M. Rahman, T. Asyhari *et al.*, "Evolution of IoT-enabled connectivity and applications in automotive industry: A review," *Vehicular Communications*, vol. 25, p. 100285, 2020.

[5] A. Al-Fuqaha, M. Guizani, M. Mohammadi, M. Aledhari, and M. Ayyash, "Internet of things: A survey on enabling technologies, protocols, and applications," *IEEE Communications Surveys Tutorials*, vol. 17, no. 4, pp. 2347–2376, 2015.

[6] S. Corrigan, "Introduction to the controller area network (can)," Texas Instruments, Application Report SLOA101, 2002. [Online]. Available: https://masters.donntu.ru/2005/fvti/trofunenko/library/sloa101.pdf

[7] U. Fugiglando, E. Massaro, P. Santi, S. Milardo, K. Abida, R. Stahlmann, F. Netter, and C. Ratti, "Driving behavior analysis through can bus data in an uncontrolled environment," *IEEE Transactions on Intelligent Transportation Systems*, vol. 20, no. 2, pp. 737–748, 2019.

[8] A. Rao, H. Gupta, P. Singh, S. Mittal, U. Singh, and D. K. Vishwakarma, "Optimizing electric vehicle efficiency with real-time telemetry using machine learning," in *2024 10th International Conference on Mechatronics and Robotics Engineering (ICMRE)*, 2024, pp. 213–219.

[9] M. O. Farooq and D. Pesch, "Analyzing lora: A use case perspective," in *2018 IEEE 4th World Forum on Internet of Things (WF-IoT)*, 2018, pp. 355–360.

[10] M. Jouhari, N. Saeed, M.-S. Alouini, and E. M. Amhoud, "A survey on scalable lorawan for massive iot: Recent advances, potentials, and challenges," *IEEE Communications Surveys and Tutorials*, vol. 25, no. 3, pp. 1841–1876, 2023.

[11] P. Rojnarong and W. Pora, "Signal strength and energy consumption on various internet of things communication protocol using heltec esp32 lora," in *2024 21st International Joint Conference on Computer Science and Software Engineering (JCSSE)*, 2024, pp. 626–630.

[12] L. García, J. M. Jimenez, J. Lloret, and P. Lorenz, "Wifi and lora energy consumption comparison in iot esp 32/ sx1278 devices," in *International Conference on Smart Cities (SMART)*. IARIA, 2019, pp. 26–31. [Online]. Available: http://hdl.handle.net/10251/180545

[13] K. F. Haque, A. Abdelgawad, V. P. Yanambaka, and K. Yelamarthi, "A lora based reliable and low power vehicle to everything (v2x) communication architecture," in *2020 IEEE International Symposium on Smart Electronic Systems (iSES) (Formerly iNiS)*, 2020, pp. 177–182.

[14] A. P. A. Torres, C. B. da Silva, and H. T. S. Filho, "An experimental study on the use of LoRa technology in vehicle communication," *IEEE Access*, vol. 9, pp. 26 633–26 640, 2021.

[15] S. A. Nivetha, S. Anandhan, P. Selvamurugan, and T. Kumaresan, "An experimental study on the use of lora technology in vehicle communication," *International Journal on Recent and Innovation Trends in Engineering and Technology*, vol. 24, no. 2, 2024.

[16] A. Elmaghbub and B. Hamdaoui, "LoRa device fingerprinting in the wild: Disclosing rf data-driven fingerprint sensitivity to deployment variability," *IEEE Access*, vol. 9, pp. 142 893–142 909, 2021.

[17] M. Girolami, F. Mavilia, A. Berton, G. Marrocco, and G. M. Bianco, "An experimental dataset for search and rescue operations in avalanche scenarios based on LoRa technology," *IEEE Access*, vol. 12, pp. 171 015–171 035, 2024.

[18] H. Zhang, G. Liu, and T. Jiang, "Parameter configuration scheme for optimal energy efficiency in LoRa-based wireless underground sensor networks," *IEEE Transactions on Vehicular Technology*, vol. 74, no. 6, pp. 9961–9966, 2025.

[19] Q. Cheng, G. Cai, J. He, and G. Kaddoum, "Design and performance analysis of MEC-aided LoRa networks with power control," *IEEE Transactions on Vehicular Technology*, vol. 74, no. 1, pp. 1597–1609, 2025.

[20] C. Demeslay, P. Rostaing, and R. Gautier, "Theoretical performance of lora system in multi-path and interference channels," *IEEE Internet*

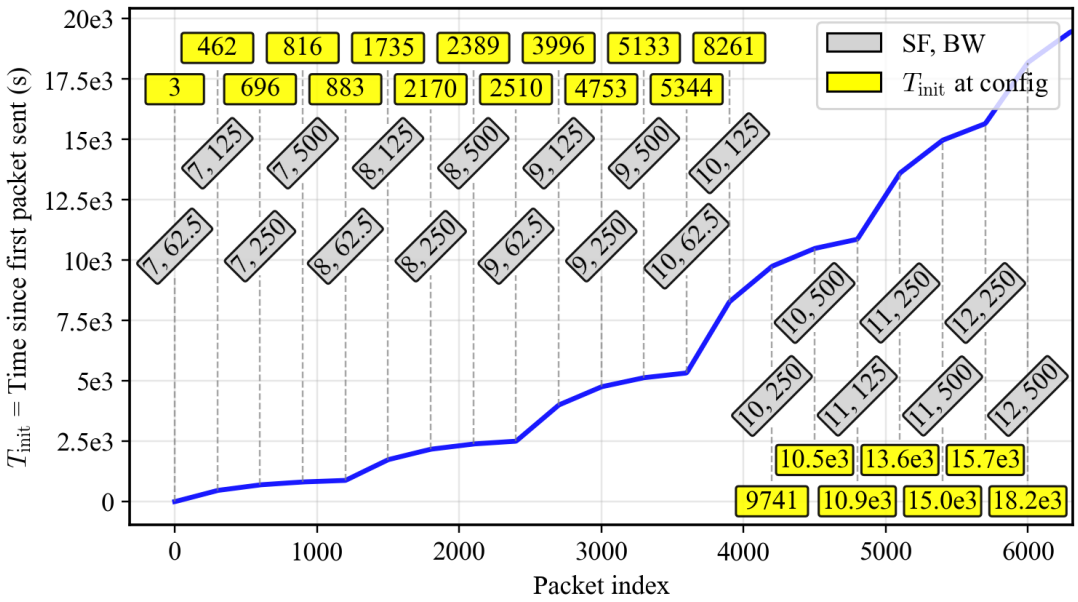

Fig. 5: Caption

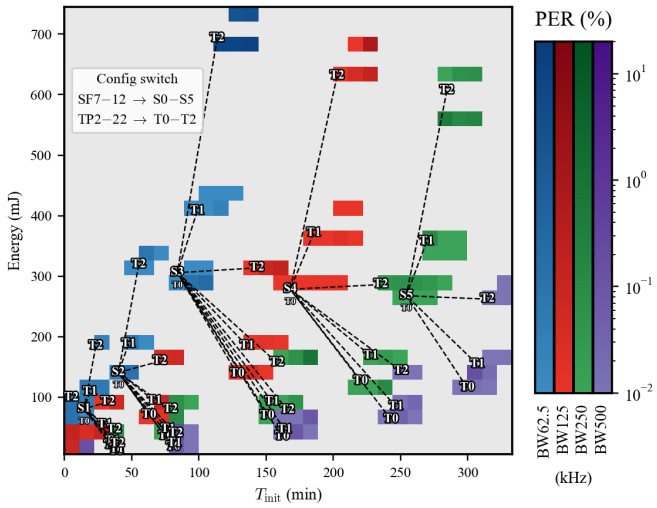

Fig. 6: Caption

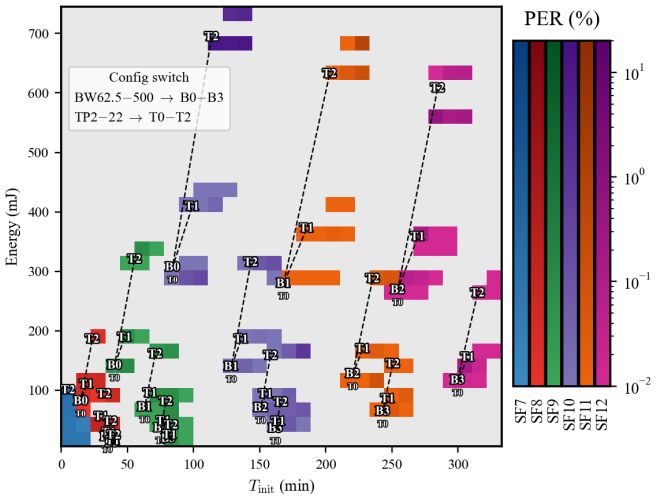

Fig. 7: Caption

of Things Journal, vol. 9, no. 9, pp. 6830–6843, 2022. [Online]. Available: https://doi.org/10.1109/JIOT.2021.3114439

[21] J. Liu, Y. Yan, P. Huang, B. Ma, and H. Yu, "Block interleaved chirp spreading lora modulation over multipath channels," *IEEE Transactions on Vehicular Technology*, vol. 73, no. 7, pp. 10 840–10 844, 2024. [Online]. Available: https://doi.org/10.1109/TVT.2024.3374411

[22] ——, "Block interleaved chirp spreading LoRa modulation over multipath channels," *IEEE Transactions on Vehicular Technology*, vol. 73, no. 7, pp. 10 840–10 844, 2024.

[23] Z. Liang, G. Cai, J. He, G. Kaddoum, and C. Huang, "Performance analysis of multi-RIS-aided LoRa systems with outdated and imperfect CSI," *IEEE Transactions on Communications*, vol. 73, no. 7, pp. 4647–4661, 2025.

[24] F. M. Chache, S. Maxon, R. M. Narayanan, and R. Bharadwaj, "Effects on age of information from forward error correction in lora transmissions," *IEEE Sensors Journal*, vol. 24, no. 19, pp. 30 853–30 862, 2024. [Online]. Available: https://doi.org/10.1109/JSEN.2024.3442917

[25] S. Sağır, İ. Kaya, C. Şişman, Y. Baltacı, and S. Ünal, "Evaluation of low-power long distance radio communication in urban areas: Lora and impact of spreading factor," in *2019 Seventh International Conference on Digital Information Processing and Communications (ICDIPC)*, 2019, pp. 68–71. [Online]. Available: https://doi.org/10.1109/ICDIPC.2019.8723666

[26] A. Farhad, G.-R. Kwon, and J.-Y. Pyun, "Mobility adaptive data rate based on kalman filter for lora-empowered iot applications," in *2023 IEEE 20th Consumer Communications Networking Conference (CCNC)*, 2023, pp. 321–324.

[27] R. Shen, D. Wang, W. Luo, and J. Jia, "Enhancing link performance for mobile LoRa networks," *IEEE Transactions on Mobile Computing*, pp. 1–18, 2025, early Access.

[28] O. AlHousrya, A. Bennagi, P. A. Cotfas, and D. T. Cotfas, "The role of the industrial iot in advancing electric vehicle technology: A review," *Applied Sciences*, vol. 15, no. 17, p. 9290, 2025. [Online]. Available: https://doi.org/10.3390/app15179290

[29] R. M. Ghodhbane, "Maximization of wireless sensing network's

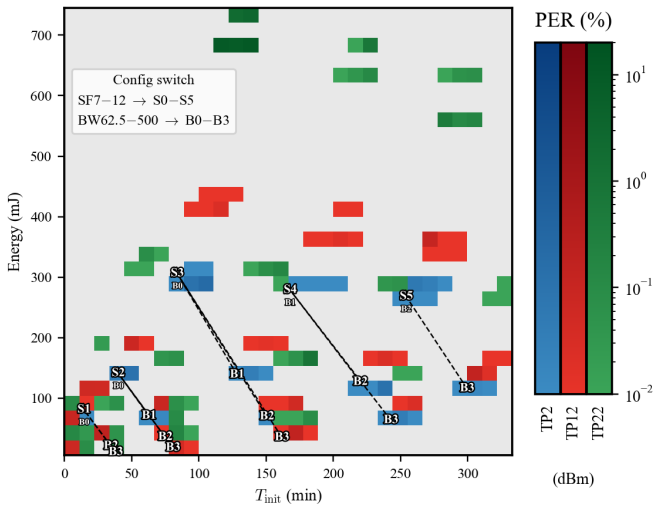

Fig. 8: Caption

throughput communicating with long range (lora) modulation," in *2024 IEEE 7th International Conference on Advanced Technologies, Signal and Image Processing (ATSIP)*, vol. 1, 2024, pp. 594–599.

[30] R. Ariyoshi, M. Hasegawa, T. Ohtsuki, and A. Li, "Energy efficient transmission parameters selection method using reinforcement learning in distributed LoRa networks," in *Proceedings of the IEEE Wireless Communications and Networking Conference (WCNC)*, Milan, Italy, 2025, extended version available as arXiv:2410.11270.

[31] Z. Lin, X. Zhang, S. Gong, L. Li, Z. Su, and B. Gu, "Matching-driven deep reinforcement learning for energy-efficient transmission parameter allocation in multi-gateway LoRa networks," *IEEE Transactions on Vehicular Technology*, vol. 74, no. 2, pp. 3283–3295, 2025.

[32] C. Srun, S. Siren, V. Ny, S. Ive, S. Mao, and S. Phal, "Efficient energy usage monitoring system with esp32 technology," in *2024 7th International Conference on Green Technology and Sustainable Development (GTSD)*, 2024, pp. 56–61.

[33] A. A. H. Isa, M. T. Iqbal, M. N. Dani, T. Jiann, D. S. Laila, and S. Mohammed Sulthan, "Battery monitoring system and control using lora technology for battery behavior and analysis," in *4th International Conference on Innovative Research in Applied Science, Engineering and Technology, IRASET 2024*, 05 2024, pp. 1–11.

[34] "Adaptive data rate — the things network." [Online]. Available: https://www.thethingsnetwork.org/docs/lorawan/adaptive-data-rate/

[35] W. Gao, W. Du, Z. Zhao, G. Min, and M. Singhal, "Towards energy-fairness in lora networks," *Proceedings - International Conference on Distributed Computing Systems*, vol. 2019-July, pp. 788–798, 7 2019. [Online]. Available: https://ieeexplore.ieee.org/document/8885170#citations

[36] R. Croall, W. Olsson, D. H. Pohren, A. D. S. Roque, and E. P. D. Freitas, "Enhancing communication and energy efficiency in an iot-enabled solar-powered vehicle," *IEEE International Symposium on Industrial Electronics*, 2025. [Online]. Available: https://ieeexplore.ieee.org/document/11124761

[37] "Eco documentation." [Online]. Available: https://docdb.cept.org/document/845

[38] L. Alliance, "Lorawan® regional parameters rp002-1.0.4," https://www.thethingsnetwork.org/docs/lorawan/frequencies-by-country/, 2022.

[39] Erm, "En 300 220-2 - v3.2.1 - short range devices (srd) operating in the frequency range 25 mhz to 1 000 mhz; part 2: Harmonised standard for access to radio spectrum for non specific radio equipment," 2018. [Online]. Available: https://portal.etsi.org/TB/ETSIDeliverableStatus.aspx

[40] "Wireless & sensing preliminary datasheet sx1276/77/78-137 mhz to 1020 mhz low power long range transceiver." [Online]. Available: www.semtech.com

[41] M. Anjum, M. A. Khan, S. Ali Hassan, A. Mahmood, and M. Gidlund, "Analysis of rssi fingerprinting in lora networks," in *2019 15th International Wireless Communications Mobile Computing Conference (IWCMC)*, 2019, pp. 1178–1183.

[42] A. Pokharel, P. Sapkota, D. Sapkota, S. Dahal, S. Karki, and R. K. Budhathoki, "Performance evaluation of lora technology for rural connectivity: An experimental analysis in nepal," pp. 1–12, 2024. [Online]. Available: https://arxiv.org/abs/2412.04563

[43] A. dos Santos Roque, L. M. da Silva Alves, and E. P. de Freitas, "CAN-Modes: In-vehicle datasets generation and analysis in different driving situations," in *9th Workshop on Communication Networks and Power Systems (WCNPS)*. IEEE, 2024.

[44] B. Lampe and W. Meng, "can-train-and-test: A curated CAN dataset for automotive intrusion detection," *Computers & Security*, vol. 140, p. 103777, 2024.

[45] S. Montagny, "Lora-lorawan and internet of things for beginners a low power, long range, wireless technology." [Online]. Available: www.univ-smb.fr/lorawan

[46] "Esp32-s3-wroom-1 & esp32-s3-wroom-1u datasheet." [Online]. Available: https://documentation.espressif.com/esp32-s3-wroom-1_wroom-1u_datasheet_en.pdf