POLITECNICO
MILANO 1863

SCUOLA DI INGEGNERIA INDUSTRIALE
E DELL'INFORMAZIONE

Corso di Laurea in Ingegneria Aerospaziale
062136 - Analisi e Simulazione di Sistemi Aerospaziali
2024/2025

# Lab 02

## INVERTED PENDULUM


Lucrezia Roncelli, 213267, lucrezia.roncelli@mail.polimi.it *(student 1)*

Marta Rubini, 213259, marta.rubini@mail.polimi.it *(student 2)*

Edoardo Andrej Francesco Semeria, 209967, edoardoandrej.semeria@mail.polimi.it *(student 3)*

Harpreet Singh, 213310, harpreet1.singh@mail.polimi.it *(student 4)*


WE HEREBY DECLARE THAT THIS ASSIGNMENT IS OUR OWN ORIGINAL WORK, BASED ON OUR PERSONAL STUDY AND CODES. WE HAVE NOT USED WORK PREVIOUSLY PRODUCED BY OTHER STUDENTS OR ANY OTHER PERSON TO HAND IN AS OUR OWN. WE HAVE NOT ALLOWED, AND WILL NOT ALLOW, ANYONE TO COPY OUR WORK WITH THE INTENTION OF PASSING IT OFF AS HIS OR HER OWN WORK.

## Contents


**0 Introduction** **3**

0.1 Summary of the contents of the report . . . 3

0.2 Definition and implications of inverted pendulum . . . 3

**Part 1 Introduction** **4**

**1 Task 1.1: Mathematical model** **4**

1.1 Calculation of the equation of motion through Lagrange's approach . . . 4

1.2 Representation of the system in state-space . . . 6

**2 Task 1.2: Nonlinear open-loop response to a force applied on the cart (MATLAB®)** **7**

2.1 Justification of Integration Method with Performance Evaluation . . . 7

2.2 Analysis and comparison of the outputs responses $x(t)$ and $\theta(t)$ . . . 7

2.2.1 1 N pulse force . . . 8

2.2.2 5 N pulse force . . . 9

2.2.3 25 N pulse force . . . 9

2.2.4 Conclusion . . . 9

**3 Task 1.3: Nonlinear open-loop response to a force applied on the cart (Simulink®) 10**
3.1 Model based on integral block approach . . . 10
3.2 Model based on M-function . . . 11
3.3 Comparison between models . . . 11

**4 Task 1.4: analysis of the linearized system 12**
4.1 State-space of linearized model . . . 12
4.2 Transfer functions $G_{xu}(s)$ and $G_{\theta u}(s)$ . . . 14
4.3 Pole-zero map for both transfer functions . . . 15
4.4 Asymptotic and real Bode diagram for both transfer functions . . . 16

**5 Task 1.5: Comparison of the nonlinear and linear response (MATLAB®) code 17**
5.1 Conclusion . . . 19

**6 Task 1.6: Comparison of the nonlinear and linear open-loop responses (Simulink®) 19**

**Part 2 Introduction 20**

**1 Task 2.1: Mathematical model 20**
1.1 Calculation of the equation of motion through Lagrange's equation . . . 20
1.2 Representation of the nonlinear system in state-space . . . 21
1.3 Linearized EOM of the system . . . 21
1.4 Representation of the linear system in state-space . . . 22

**2 Task 2.2: open-loop transfer function 22**
2.1 Expression of the open-loop transfer function $G(s)$ . . . 22
2.2 Pole-zero map . . . 23
2.3 Conclusion . . . 23

**3 Task 2.3: Proportional control for stabilization 23**
3.1 Expression of the closed-loop transfer function $G_c^P(s) = \Theta(s)/D(s)$ . . . 24
3.2 Inability of the proportional controller to stabilize the system . . . 24
3.2.1 Controller-Induced Marginal Stability . . . 25
3.3 Root Locus of $G_c^P(s)$ . . . 25

**4 Task 2.4: Proportional-Derivative (PD) control for stabilization 26**
4.1 Expression of the closed-loop transfer functions . . . 26
4.2 Selection of PD Gains Based on Time-Domain Specifications . . . 27
4.2.1 Calculation of the desired $\xi$ and $\omega_n$ . . . 27
4.2.2 Determination of $k_P$ and $k_D$ . . . 28
4.3 Nonlinear Closed-Loop Response of the PD-Controlled System to a Disturbance (Matlab®) . . . 28
4.3.1 Step Disturbance Response . . . 28
4.3.2 Pulse Disturbance Response . . . 29
4.4 Nonlinear Closed-Loop Response of the PD-Controlled System to a Pulse Disturbance (Simulink®) . . . 30

**5 Task 2.5: partial and full state feedback control 31**
5.0.1 Limitations of the Partial State Feedback Controller . . . 31
5.1 Equations of the full state feedback controller . . . 31
5.2 Implementation of the Full State PD Controller in Matlab® . . . 32
5.2.1 Pole selection . . . 32
5.2.2 Pulse Disturbance Response and comparison with partial state feedback controller . . . 32

# 0. Introduction

## 0.1. Summary of the contents of the report

This document presents both linear and non-linear mathematical models of the inverted pendulum mounted on a cart. The aim is to describe a simple yet inherently unstable mechanical system, through the derivation of the system's equations of motion and their state-space formulation, followed by open-loop response analyses performed using different numerical integration schemes. The study is implemented in MATLAB® and simulated in Simulink®. At last, the focus is shifted on the design of controllers, considering proportional (P) and proportional-derivative (PD) control strategies for system stabilization, and evaluating their performance in achieving system stability.

## 0.2. Definition and implications of inverted pendulum

The system is made of a rigid cart of mass $M$ constrained to linear motion along a horizontal guide, subject to viscous friction characterized by a coefficient $c$. On top of the cart, a rigid massless rod of length $\ell$, having a tip point mass $m$, is fixed. The rod can freely rotate about the pivot point $P$, upon which a viscous force acts, with friction coefficient $b$.
By studying such a physical model, it is possible to analyse instability phenomena that arise in the context of vehicle control design, particularly in the aerospace field. A relevant example is the vertical landing of a rocket, where the system is subject to various perturbations, such as wind gusts, engine thrust variations, and sensor noise. The study of such a physical model is pivotal, since these disturbances can significantly affect the stability of the vehicle, making robust control strategies essential to ensure a safe and precise landing. [1]

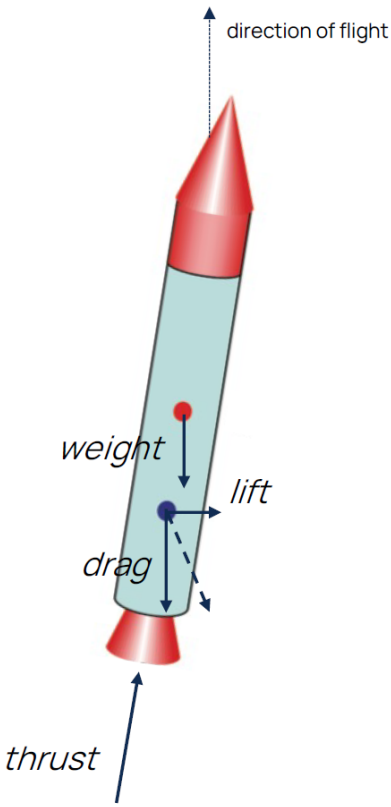


Figure 1: Rocket model

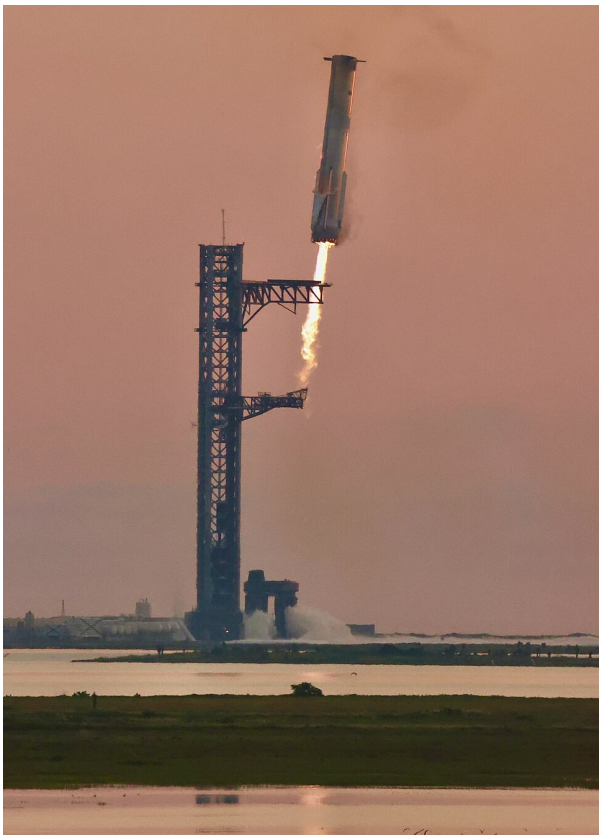

Figure 2: Starship booster return [2]

# Part 1 Introduction

The first part of the project focuses on the analysis of the dynamic model of an inverted pendulum on a cart, considered in an open-loop setting with no control input. The study begins with a mathematical analysis of a nonlinear physical model, which is then linearised about a given equilibrium point. The resulting linear and nonlinear models are then compared by observing their responses to impulse inputs of different magnitudes. Both MATLAB® and Simulink® were employed to perform the simulations. The objective is to get a better grasp on the unstable nature that lies within the given system through the numerical consistency between analytical and graphical approaches.

In particular, the following data have been used throughout this first part of the study:

| **Parameters** | | **Value** | **Units** |
|---|---|---|---|
| Cart mass | $M$ | 3.0 | $kg$ |
| Tip point mass | $m$ | 0.1 | $kg$ |
| Rod length | $\ell$ | 0.75 | $m$ |
| Gravity acceleration | $g$ | 9.81 | $m/s^2$ |
| Viscous friction coefficient of the guide | $c$ | 0.1 | $N/m/s$ |
| Viscous friction coefficient of the rod | $b$ | 0.001 | $Nm/rad/s$ |

Table 1: Initial parameters for Task 1

# 1. Task 1.1: Mathematical model

This section is devoted to the study of the physical model of the inverted pendulum on a cart through a mathematical approach aimed at deriving the equations of motion and the corresponding state-space representation, while preserving the system's nonlinearity. At first glance, it is evident that the model exhibits two degrees of freedom: the cart translates along a horizontal track following the axis $x$, while the rod can freely move about a pivot point by an angle $\theta$.

The steps to derive the mathematical expressions are as follows:

1. By applying Lagrange's equations and relying on both kinematic and dynamic analyses, the equations of motion are derived.
2. Finding the non-linear state-space equations using the state vector

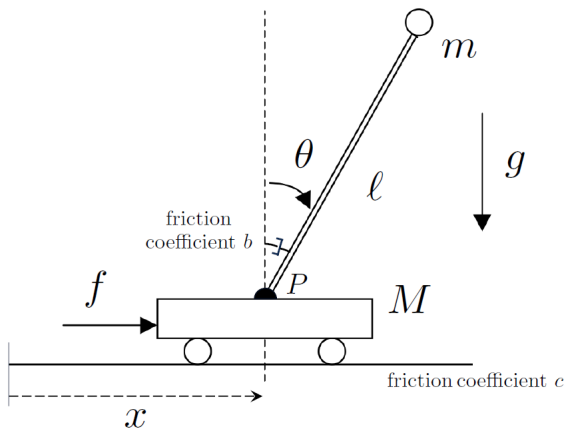


Figure 3: Inverted pendulum model

$$\mathbf{x} = \begin{bmatrix} x \\ \dot{x} \\ \theta \\ \dot{\theta} \end{bmatrix} = \begin{bmatrix} x_1 \\ x_2 \\ x_3 \\ x_4 \end{bmatrix}$$

## 1.1. Calculation of the equation of motion through Lagrange's approach

Given that the hypotheses describing the model are defined, it is possible to derive the set of second-order nonlinear equations of motion of the system, hence the mathematical relations that outline how the system moves over time.

As a first step, the system's motion is analysed without considering the causes of the movement; therefore, its kinematics.

Knowing that the system has two degrees of freedom, the position $x = x(t)$ and the angle $\theta = \theta(t)$ are selected as generalised coordinates.

In the forthcoming analysis, the center of mass of the cart lies at point A, while the tip point mass $m$ coincides with point B. Given the system's reference frame, the positions of A and B are defined as follows:

$$P_A : \begin{cases} x_A = x \\ y_A = 0 \end{cases} \qquad P_B : \begin{cases} x_B = x + \ell \sin\theta \\ y_B = \ell \cos\theta \end{cases} \tag{1}$$

The velocity is obtained by taking the derivative with respect to time:

$$v_A : \begin{cases} \dot{x}_A = \dot{x} \\ \dot{y}_A = 0 \end{cases} \qquad v_B : \begin{cases} \dot{x}_B = \dot{x} + \ell \cos\theta\dot{\theta} \\ \dot{y}_B = -\ell \sin\theta\dot{\theta} \end{cases} \tag{2}$$

Taking the derivative with respect to time once more, the acceleration is obtained:

$$a_A : \begin{cases} \ddot{x}_A = \ddot{x} \\ \ddot{y}_A = 0 \end{cases} \qquad a_B : \begin{cases} \ddot{x}_B = \ddot{x} + \ell \cos\theta\ddot{\theta} - \ell \sin\theta\dot{\theta}^2 \\ \ddot{y}_B = -\ell \sin\theta\ddot{\theta} - \ell \cos\theta\dot{\theta}^2 \end{cases} \tag{3}$$

Now, the equations of motion of the system are determined through the application of Lagrange's equation (4): a differential equation that describes the temporal evolution of a physical system in terms of its generalized coordinates, generalized velocities, the system's energies, and the imposed constraints.
The system's degrees of freedom, which in this case are two, are equivalent to the number of EOM. Its mathematical formulation, in its generalised form with dissipative terms (function of Rayleigh), is as follows [3]:

$$\begin{cases} \dfrac{d}{dt}\left(\dfrac{\partial E_c}{\partial \dot{x}}\right) - \left(\dfrac{\partial E_c}{\partial x}\right) + \dfrac{\partial D}{\partial \dot{x}} + \dfrac{\partial V}{\partial x} = Q_x \\ \dfrac{d}{dt}\left(\dfrac{\partial E_c}{\partial \dot{\theta}}\right) - \left(\dfrac{\partial E_c}{\partial \theta}\right) + \dfrac{\partial D}{\partial \dot{\theta}} + \dfrac{\partial V}{\partial \theta} = Q_\theta \end{cases} \tag{4}$$

The individual terms of the equation are to be considered and calculated with respect to the system.
The focus is initially placed on the first term of Lagrange's equation (4), with the aim to calculate the kinetic energy:

$$E_c = \frac{1}{2}M\dot{x}^2 + \frac{1}{2}m\left(\dot{x}^2 + 2\dot{x}\dot{\theta}\ell\cos\theta + \dot{\theta}^2\ell^2\right) \tag{5}$$

The total derivative with respect to time of the kinetic energy (5) first partial derivative with respect to $\dot{x}$, and its partial derivative with respect to $x$ are as follows:

$$\frac{d}{dt}\left(\frac{\partial E_c}{\partial \dot{x}}\right) = (M+m)\ddot{x} + m\ell\cos\theta\,\ddot{\theta} - m\ell\sin\theta\,\dot{\theta}^2, \qquad \frac{\partial E_c}{\partial x} = 0. \tag{6}$$

The total derivative with respect to time of the kinetic energy (5) first partial derivative with respect to $\dot{\theta}$, and its partial derivative with respect to $\theta$:

$$\frac{d}{dt}\left(\frac{\partial E_c}{\partial \dot{\theta}}\right) = m\ell\cos\theta\,\ddot{x} - m\ell\sin\theta\,\dot{x}\,\dot{\theta} + m\ell^2\ddot{\theta}, \qquad \frac{\partial E_c}{\partial \theta} = -ml\sin\theta\,\dot{x}\,\dot{\theta}. \tag{7}$$

Attention now shifts to the viscous component of the equation:

$$D = \frac{1}{2}b\dot{\theta}^2 + \frac{1}{2}c\dot{x}^2 \tag{8}$$

Its partial derivatives with respect to $\dot{x}$ and to $\dot{\theta}$ respectively are:

$$\frac{\partial D}{\partial \dot{x}} = c\dot{x}, \qquad \frac{\partial D}{\partial \dot{\theta}} = b\dot{\theta} \tag{9}$$

Similarly, the potential component $V$ is studied:

$$V = mg\ell\cos\theta \tag{10}$$

Its partial derivatives with respect to $x$ and to $\theta$ respectively are:

$$\frac{\partial V}{\partial x} = 0, \qquad \frac{\partial V}{\partial \theta} = -mg\ell\sin\theta \tag{11}$$

Virtual work is the final term taken into consideration in the analysis:

$$\delta L = f\delta x \tag{12}$$

It follows that the generalized forces $Q_i$, defined via the principle of virtual work as $\delta L = \sum_i Q_i\,\delta q_i$ take the following expressions for $\theta$ and $x$:

$$Q_x = f, \qquad Q_\theta = 0 \tag{13}$$

Thus, the resulting equations of motion will be the following, which correspond respectively to the generalised coordinates $x$ and $\theta$:

$$\begin{cases} (M+m)\ddot{x} + m\ell\cos\theta\,\ddot{\theta} - m\ell\sin\theta\,\dot{\theta}^2 + c\dot{x} = f \\ m\ell^2\ddot{\theta} + m\ell\cos\theta\,\ddot{x} + b\dot{\theta} - mg\ell\sin\theta = 0 \end{cases} \tag{14}$$

In the following analysis, it is convenient to reformulate the equation of motion (14) to make explicit its dependencies on the state variables and to obtain a mathematical model more suitable for studying the system's dynamic behaviour:

$$\begin{cases} \ddot{x} = \dfrac{1}{M+m}\left(-m\ell\cos\theta\,\ddot{\theta} + m\ell\sin\theta\,\dot{\theta}^2 - c\dot{x} + f\right) \\ \ddot{\theta} = -\dfrac{1}{\ell}\cos\theta\,\ddot{x} - \dfrac{b}{m\ell^2}\dot{\theta} + \dfrac{g}{\ell}\sin\theta \end{cases} \tag{15}$$

## 1.2. Representation of the system in state-space

The objective at this stage is to derive the non-linear state-space formulation of the system, namely as a set of differential equations that describe the relationship between: the states of the system, the inputs, and the outputs. As shown in figure 3, the force $f$ that acts on the cart is taken as input, while the cart position $x$ and pendulum angle $\theta$ as outputs. A nonlinear dynamical system in continuous-time state-space form is generally expressed as follows:

$$\begin{cases} \dot{\mathbf{x}} = f(\mathbf{x}(t), \mathbf{u}(t), \mathbf{p}) \\ \mathbf{y} = g(\mathbf{x}(t), \mathbf{u}(t), \mathbf{p}) \end{cases} \tag{16}$$

Here, $x$ denotes the state vector, $u$ the input vector, and $y$ the output vector. The function $f$ characterizes the nonlinear dynamics of the system, whereas $g$ defines the output mapping.

In this case, the system under consideration is of order four, as it is characterized by four state variables, $x_1 = x$ that represent the position of the center of mass of the cart, $x_2 = \dot{x}$ for the velocity of the position, $x_3 = \theta$ for the rotation angle of the pendulum and $x_4 = \dot{\theta}$ for the angular velocity. The chosen input is a force $f$ on the cart which is supplied by an ideal actuator or disturbance source. While the output of interest are the cart position $x$ and pendulum angle $\theta$.

The state-space vector is defined as such: $\mathbf{x} = \mathbf{x}(\mathrm{t})$.

$$\mathbf{x} = \begin{bmatrix} x \\ \dot{x} \\ \theta \\ \dot{\theta} \end{bmatrix} = \begin{bmatrix} x_1 \\ x_2 \\ x_3 \\ x_4 \end{bmatrix} \tag{17}$$

The state derivative vector is defined by deriving the state space vector with respect to time:

$$\dot{\mathbf{x}} = \begin{bmatrix} \dot{x} \\ \ddot{x} \\ \dot{\theta} \\ \ddot{\theta} \end{bmatrix} = \begin{bmatrix} \dot{x}_1 \\ \dot{x}_2 \\ \dot{x}_3 \\ \dot{x}_4 \end{bmatrix} \tag{18}$$

Now, by substituting with the equation (15), the following system is obtained:

$$\begin{cases} \dot{\mathbf{x}} = \begin{bmatrix} \dot{x} \\ \ddot{x} \\ \dot{\theta} \\ \ddot{\theta} \end{bmatrix} = \begin{bmatrix} x_2 \\ \frac{m\ell\sin x_3}{M+m\sin^2 x_3}x_4^2 + \frac{\cos x_3\, b}{(M+m\sin^2 x_3)\,\ell}x_4 - \frac{c}{M+m\sin^2 x_3}x_2 - \frac{m\cos x_3\sin x_3\, g}{M+m\sin^2 x_3} + \frac{f}{M+m\sin^2 x_3} \\ x_4 \\ -\frac{m\sin x_3\cos x_3}{M+m\sin^2 x_3}x_4^2 - \frac{(M+m)\,b}{m\ell^2(M+m\sin^2 x_3)}x_4 + \frac{c\cos x_3}{\ell(M+m\sin^2 x_3)}x_2 + \frac{(M+m)\,g\sin x_3}{\ell(M+m\sin^2 x_3)} - \frac{f\cos x_3}{\ell(M+m\sin^2 x_3)} \end{bmatrix} \\ \mathbf{y} = \begin{bmatrix} x \\ \theta \end{bmatrix} = \begin{bmatrix} x_1 \\ x_3 \end{bmatrix} \end{cases} \tag{19}$$

The representation of a nonlinear dynamical system in continuous-time state-space form has thus been obtained.

# 2. Task 1.2: Nonlinear open-loop response to a force applied on the cart (MATLAB®)

Having obtained the state-space formulation of the model, it is now possible to simulate the nonlinear open-loop response in terms of the cart position $x$ and the pendulum angle $\theta$.

The simulation spans the time interval [0-20]s, and three different cases are studied, each corresponding to a different magnitude of the input force $f$. The force is applied as a 1-second pulse, acting from 1 to 2 seconds, with intensities of 1N, 5N, and 25N, respectively. The initial position of the system corresponds to its stable equilibrium position, which is given as:

$$\mathbf{x}_0 = \begin{bmatrix} 0 \\ 0 \\ \pi \\ 0 \end{bmatrix} \tag{20}$$

## 2.1. Justification of Integration Method with Performance Evaluation

MATLAB® provides several numerical integration methods for the numerical solution of ordinary differential equations, with the most commonly used being: ode23, ode45, ode78, ode89, and ode113. These five algorithms are based on the Runge-Kutta method, which uses implicit and explicit iterative schemes to approximate the solution without any prior linearisation. They are used to solve non-stiff problems, namely a differential equation problem in which all components of the solution evolve on comparable time scales. Their distinguishing features are the order, accuracy, and stability, as it can be seen in table 2.

| Solver | Methodological approach | Order of accuracy | Computational cost |
|---|---|---|---|
| **ode23** | Explicit Runge-Kutta (2nd3rd order) | Low (2nd order with 3rd order error estimate) | Low (2 function evaluations per step) |
| **ode45** | Explicit Runge-Kutta (4th5th order) | Medium (4th order with 5th order error estimate) | Medium (6 function evaluations per step) |
| **ode78** | Explicit Runge-Kutta (7th8th order) | High (7th order with 8th order error control) | High (13 function evaluations per step) |
| **ode89** | Explicit Runge-Kutta (8th9th order) | Very high (8th order with 9th order error control) | Very high (>13 function evaluations per step) |
| **ode113** | Adams-Bashforth-Moulton (Multi-step, variable order) | Variable (1st to 13th order, adaptive) | Variable (efficient for smooth problems) |

Table 2: Comparison between ODE solvers

Ode23 is based on Runge-Kutta methods between order 2 and 3. Even though it provides acceptable accuracy, it is best suited for relatively simple problems or those involving moderate stiffness. On the other hand, ode45 is an explicit method of order 4 - 5 that offers a good balance between accuracy and computational cost, making it a preferred choice for general-purpose applications. Lastly, ode89 is a high-order (89) solver that provides excellent accuracy but with significant computational demands, making it suitable for problems requiring high precision or long-duration simulations. Using ode45 is the most reasonable choice, as it provides adequate precision, maintains a moderate computational cost, and is capable of directly integrating the nonlinear model obtained earlier (14).

## 2.2. Analysis and comparison of the outputs responses $x(t)$ and $\theta(t)$

The next objective is to carry out a graphical analysis of the non-linear response for the three selected input cases. Each scenario corresponds to a different magnitude of the applied force, allowing the assessment of how the system behaves under varying levels of excitation. The resulting trajectories provide insight into the system's dynamic behaviour, and by plotting the output responses of the cart position $x(t)$ and the pendulum angle $\theta(t)$, the figure 4 is obtained.

The top panel of figure 4 shows the time evolution of the cart position $x(t)$. The profile $x(t)$ exhibits a monotonically increasing trend, as in the absence of feedback control, the impulsive force accelerates the cart, causing it to diverge from its initial position.

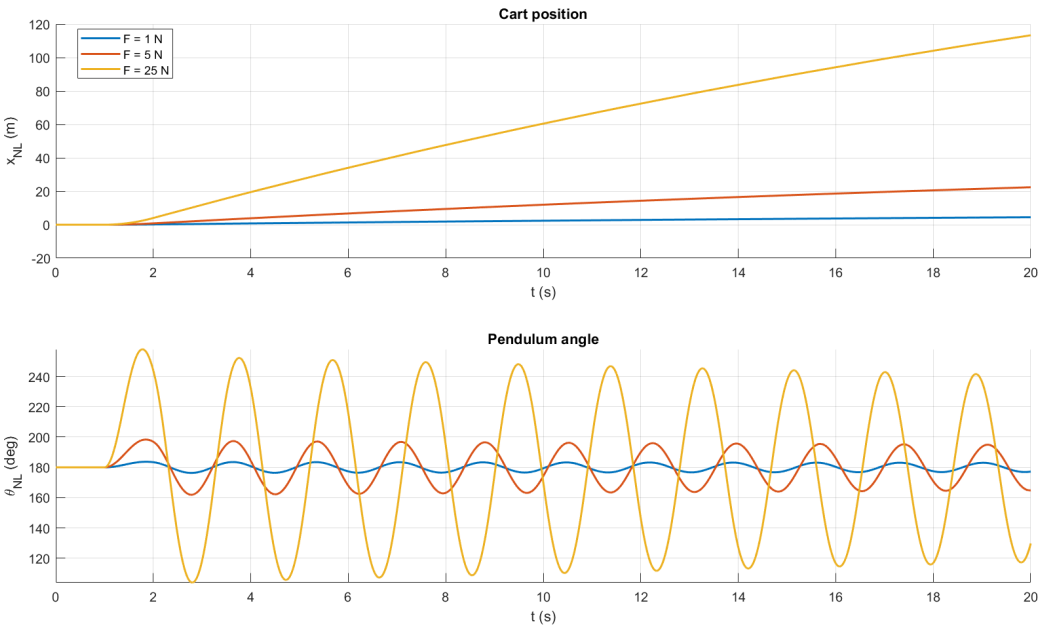


Figure 4: Output responses $x(t)$ and $\theta(t)$

The bottom panel displays the time evolution of the pendulum angle $\theta(t)$. Since the initial position of the pendulum corresponds to the stable equilibrium at $\theta = \pi$, it exhibits oscillatory behaviour under the action of the applied force. The presence of dissipative terms, related to the viscous friction coefficients $b$ for the rod, and $c$ for the horizontal guide, contributes to the gradual attenuation of both the pendulum's oscillations and the cart's displacement over time.

### 2.2.1. 1 N pulse force

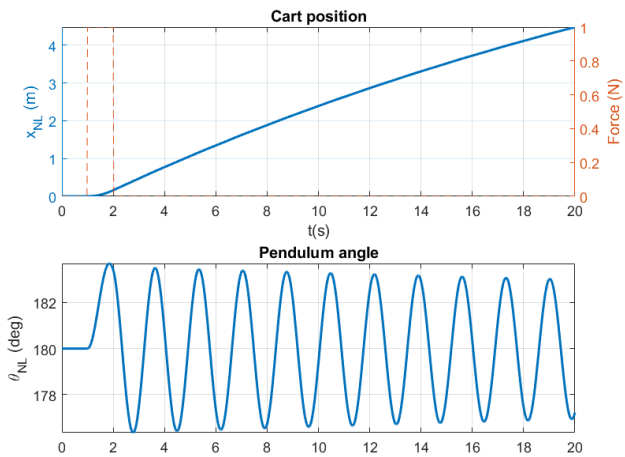


Figure 5: Output responses $x(t)$ and $\theta(t)$ with a 1 N pulse

The cart position $x(t)$ shows a gradual, nearly quadratic trend over time, reaching a maximum of approximately 4 metres at the end of the observation interval [0-20] seconds.
The pendulum angle $\theta(t)$ performs small oscillations around the initial position, which corresponds to an unstable equilibrium, with a limited amplitude of approximately $\pm$ 3° and an almost constant frequency.

### 2.2.2. 5 N pulse force

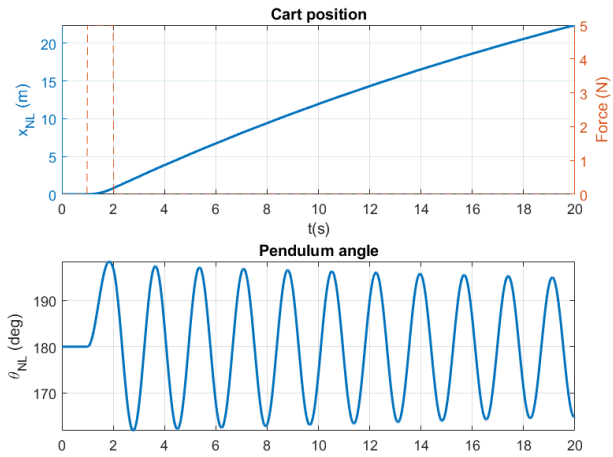


Figure 6: Output responses $x(t)$ and $\theta(t)$ with a 5 N impulse

In this case, the cart position changes more rapidly, reaching approximately 22 metres within 20 seconds.
The angular oscillations increase, reaching an amplitude of approximately $\pm$ 15° around the 180° position.
This suggests that the amplitude of the force will have a greater influence on the system, but without leading to a determining instability.

### 2.2.3. 25 N pulse force

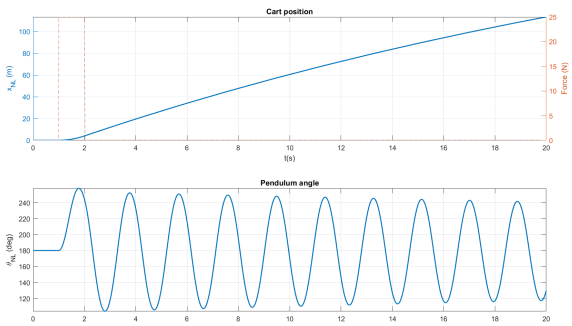


Figure 7: Output responses $x(t)$ and $\theta(t)$ with a 25 N impulse

When the applied impulse is 25 N, the system exhibits a more pronounced change in behavior compared to the previous two cases. In particular, the cart moves more rapidly, covering 100 meters in 20 seconds. The pendulum, on the other hand, reaches a total amplitude of $\pm$ 60°, and its oscillations become highly asymmetric, with time-varying frequencies. The graph significantly deviates from the profile of a pure sinusoid, indicating that a non-linear model is required to accurately describe the systems dynamics, as a linear model would fail to capture the observed complexities.

### 2.2.4. Conclusion

As the amplitude of the applied force increases, the system's behavior becomes increasingly complex. In these cases, the full nonlinear model is employed to capture certain phenomena such as motion asymmetry and dynamic frequency variations, which manifest as instabilities, frequency modulation, and large-amplitude oscillations.

# 3. Task 1.3: Nonlinear open-loop response to a force applied on the cart (Simulink®)

In this section, the analysis conducted previously is repeated by implementing a model in Simulink®). Specifically, the nonlinear response for each of the three input cases is computed using two different approaches. The initial conditions and the input forces remain unchanged, as do the output variables: $x(t)$ representing the cart's position and $\theta(t)$ representing the pendulum angle. The simulation time is also set to 20 seconds, consistent with the MATLAB®-based procedure.

Two models have been developed on Simulink®: one is based on standard integration blocks, and the other has been implemented through a MATLAB® Function block.

## 3.1. Model based on integral block approach

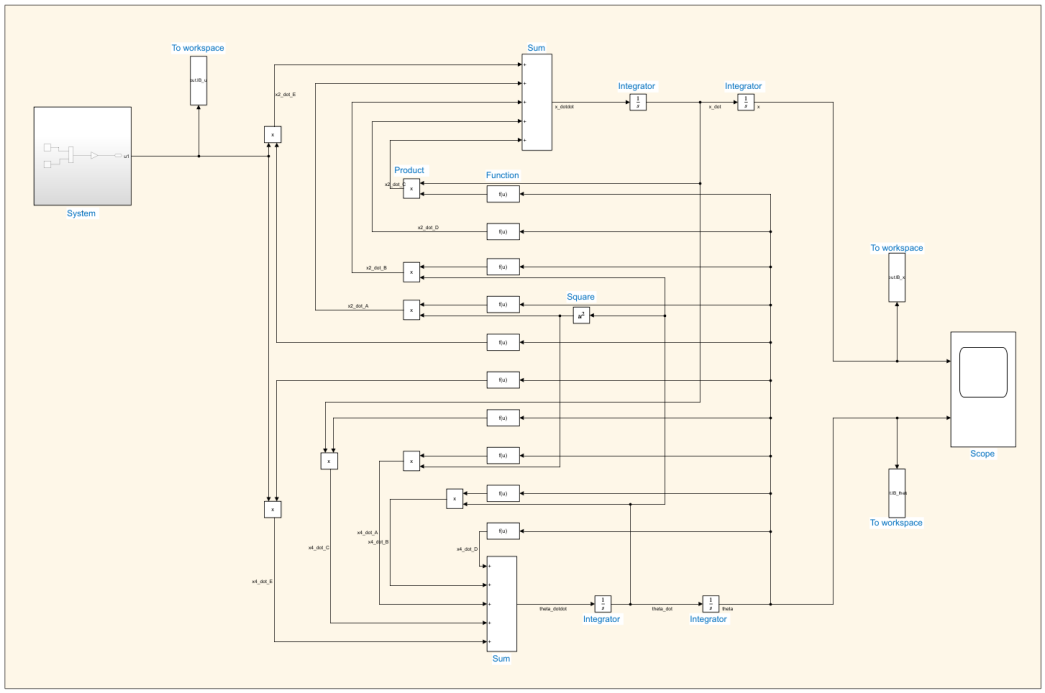


Figure 8: Block Diagram of the Simulink® Model with Integrator Blocks

In this first model, the nonlinear system was implemented using integrator blocks in Simulink® to better capture its dynamic evolution.

The input $u(t)$, which represents a pulse force, is implemented by summing two *Step* blocks with appropriately chosen parameters to define the onset and end of the pulse. A *Gain* block is then used to scale the amplitude of the pulse, allowing different input magnitudes to be tested within the same model structure.

The equations of motion were realised through chains of elementary mathematical blocks.

With reference to (19), it can be seen that the equation associated with $\ddot{x}$ consists of five main terms, the first of these being the one multiplied by $\dot{\theta}^2$.

In order to represent this term in the Simulink® model, a branch originates from the signal representing $\dot{\theta}$, which is then squared. Another branch, originating from the signal $\theta$, is processed through a *Function* block, which contains the related term. The resulting signals are both multiplied via a *Product* block, and the result of this operation is fed back into a *Summation* block, where it contributes to the overall dynamics of the system. This structure allows for the representation of nonlinear or state-dependent terms in the differential equation. The other terms are treated similarly. Input forces of different magnitudes were introduced in parallel within the Simulink® scheme, replicating the structure for each case.

## 3.2. Model based on M-function

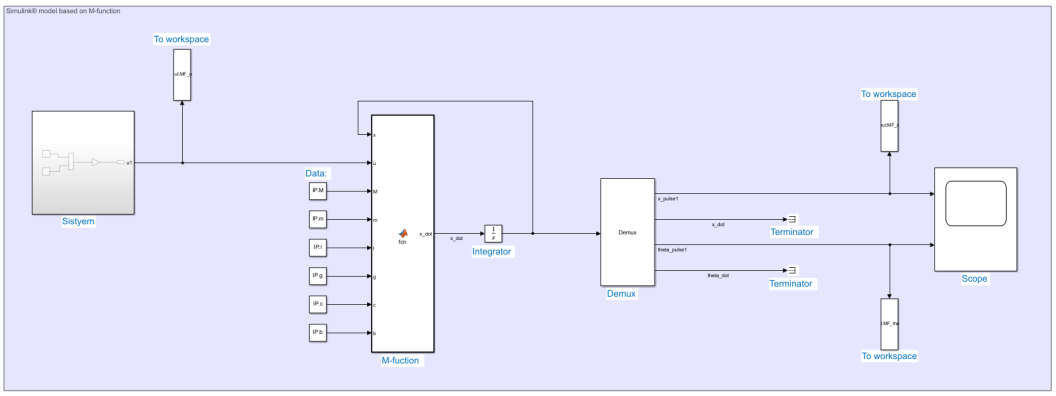


Figure 9: Block Diagram of the Simulink® Model with M-Function

In the second model, a MATLAB® function (*M-function*) block is used within Simulink®. This approach implements an explicit resolution scheme by reformulating the system in terms of the state vector (17), returning its time derivative.
Specifically, the *M-function* encodes the equations of motion derived from the Lagrangian formulation previously introduced in (19). The model receives the physical parameters and the input force $u(t)$ as inputs, applies integration to each state derivative, and extracts the relevant output signals $x(t)$ and $\theta(t)$, which are visualized using a *Scope* block.
Finally, a *for* loop was implemented in MATLAB® to iterate over the different input force values (1 N, 5 N, 25 N). This strategy automates the Simulink® model execution, reducing model complexity and improving compactness.

## 3.3. Comparison between models

Both models produced results that are consistent with each other as well as with the implementation developed in MATLAB®. The outputs corresponding to the different input impulses are exported to MATLAB® and plotted on a single graph for comparison.

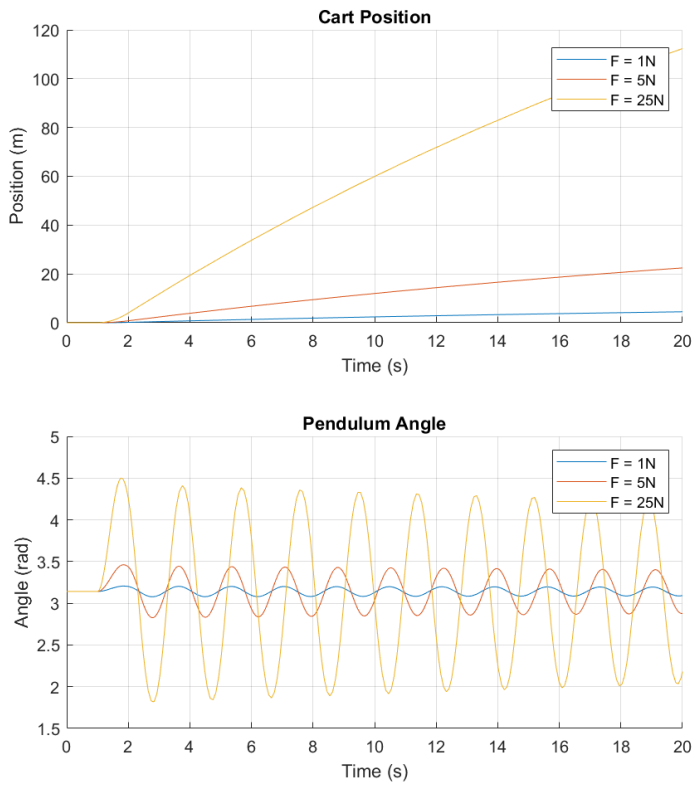


Figure 10: Output responses $x(t)$ and $\theta(t)$

Figure 10 depicts the output plots generated by both the integration block-based model and the M-function-based model. As expected, the responses are identical, confirming the correctness and consistency of the two implementations.
However, despite the numerical agreement, there are structural and constructional differences between them.
The first model, based on integration blocks, provides a clearer visualization of the system dynamics. Nonetheless, as the system becomes more complex - with additional variables and equations - the block-based graphical approach becomes increasingly cumbersome and less practical.
In contrast, the second model, which uses an M-function, proves to be more compact and scalable, as it encapsulates the system's nonlinear dynamics within a single Simulink® block. This structure facilitates clarity and manageability, even for more advanced systems.
Therefore, this second approach is generally more suitable, particularly when the model needs to be extended.

# 4. Task 1.4: analysis of the linearized system

This section presents the derivation of the equations of motion and the procedures used to obtain the state-space model. In practice, the procedures to obtain the mathematical expressions are as follows:

1. Linearization of the nonlinear dynamic system around the equilibrium point, in order to find the state matrices [4]
2. Derivation of the mathematical and numerical expression of the transfer functions $G_{xu}$ and $G_{\theta u}$
3. Plot of the pole-zero map of both TFs
4. Plot of the asymptotic and real Bode diagram (magnitude and phase) for both TFs.

## 4.1. State-space of linearized model

The first purpose set is to linearize the non-linear dynamic system (19) around the equilibrium configuration:

$$\dot{\mathbf{x}}_{eq} = \begin{bmatrix} 0 \\ 0 \\ \pi \\ 0 \end{bmatrix} \tag{21}$$

Since nonlinear systems are difficult to analyze or control directly, it is useful to linearize the system around an equilibrium point, thereby facilitating its inspection and simulation. This implies that the dynamic system can be approximated in the neighborhood of a prescribed motion (such as an equilibrium point) by means of linearized models.

The intention at this stage of the discussion is to construct a linear model that accurately approximates the behavior of the nonlinear dynamic system in the vicinity of a prescribed nominal trajectory.
To derive the expression of the linearized system [4], a nominal trajectory $\tilde{\mathbf{x}}(t)$ is considered, resulting from the application of a nominal input $\tilde{\mathbf{u}}(t)$ to the system initialized at $\tilde{\mathbf{x}}_{\mathbf{0}}$, yielding a nominal output $\tilde{\mathbf{y}}(t)$. A perturbed trajectory $\mathbf{x}(t)$ , corresponding to a perturbed input $\mathbf{u}(t)$ and an initial state $\mathbf{x}_0$, produces the actual output $\mathbf{y}(t)$. The differences between the two time evolutions represent the perturbations of the system.

$$\delta\mathbf{x}(t) = \mathbf{x}(t) - \tilde{\mathbf{x}}(t) \quad \in R^n \tag{22}$$

$$\delta\mathbf{u}(t) = \mathbf{u}(t) - \tilde{\mathbf{u}}(t) \quad \in R^p \tag{23}$$

$$\delta\mathbf{y}(t) = \mathbf{y}(t) - \tilde{\mathbf{y}}(t) \quad \in R^q \tag{24}$$

The time evolution of the perturbation on the state $\delta\mathbf{x}(t)$ is governed by the equation:

$$\delta\dot{\mathbf{x}}(t) = \frac{d(\delta\mathbf{x})}{dt} = \frac{d(\mathbf{x}(t) - \tilde{\mathbf{x}}(t))}{dt} = \dot{\mathbf{x}}(t) - \dot{\tilde{\mathbf{x}}}(t) = \mathbf{f}(\mathbf{x}(t), \mathbf{u}(t)) - \mathbf{f}(\tilde{\mathbf{x}}(t), \tilde{\mathbf{u}}(t)) \tag{25}$$

The function $\mathbf{f}(\mathbf{x}(t), \mathbf{u}(t))$ can be expanded in a Taylor series around $\tilde{\mathbf{x}}(t)$ and $\tilde{\mathbf{u}}(t)$.

$$
\begin{aligned}
\mathbf{f}(\mathbf{x}(t),\mathbf{u}(t)) &= \mathbf{f}(\tilde{\mathbf{x}}(t)+\delta\mathbf{x}(t),\tilde{\mathbf{u}}(t)+\delta\mathbf{u}(t)) \\
&= \mathbf{f}(\tilde{\mathbf{x}}(t),\tilde{\mathbf{u}}(t)) + \left.\frac{\partial\mathbf{f}(\mathbf{x}(t),\mathbf{u}(t))}{\partial\mathbf{x}}\right|_{\tilde{\mathbf{x}},\tilde{\mathbf{u}}}\delta\mathbf{x}(t) \\
&\quad + \left.\frac{\partial\mathbf{f}(\mathbf{x}(t),\mathbf{u}(t))}{\partial\mathbf{u}}\right|_{\tilde{\mathbf{x}},\tilde{\mathbf{u}}}\delta\mathbf{u}(t) + o(\|\delta\mathbf{x}\|+\|\delta\mathbf{u}\|)
\end{aligned} \tag{26}
$$

Hence, $\delta\mathbf{x}(t)$ satisfies the following differential equation:

$$
\delta\dot{\mathbf{x}} = \mathbf{f}(\mathbf{x}(t),\mathbf{u}(t)) - \mathbf{f}(\tilde{\mathbf{x}}(t),\tilde{\mathbf{u}}(t)) \approx \left.\frac{\partial\mathbf{f}(\mathbf{x}(t),\mathbf{u}(t))}{\partial\mathbf{x}}\right|_{\tilde{\mathbf{x}},\tilde{\mathbf{u}}}\delta\mathbf{x}(t) + \left.\frac{\partial\mathbf{f}(\mathbf{x}(t),\mathbf{u}(t))}{\partial\mathbf{u}}\right|_{\tilde{\mathbf{x}},\tilde{\mathbf{u}}}\delta\mathbf{u}(t) = \mathbf{A}(t)\delta\mathbf{x}(t) + \mathbf{B}(t)\delta\mathbf{u}(t) \tag{27}
$$

Where $\mathbf{A}(t)$ represents the Jacobian matrix of $\mathbf{f}$ with respect to the state vector $\mathbf{x}$:

$$
\mathbf{A}(t) = \left.\frac{\partial\mathbf{f}(\mathbf{x}(t),\mathbf{u}(t))}{\partial\mathbf{x}}\right|_{\tilde{\mathbf{x}},\tilde{\mathbf{u}}} = \left.\begin{bmatrix} \frac{\partial f_1}{\partial x_1} & \cdots & \frac{\partial f_1}{\partial x_n} \\ \frac{\partial f_n}{\partial x_1} & \cdots & \frac{\partial f_n}{\partial x_n} \end{bmatrix}\right|_{\tilde{\mathbf{x}},\tilde{\mathbf{u}}} \in R^{n\times n} \tag{28}
$$

whereas $\mathbf{B}(t)$ represents the Jacobian matrix of $f$ with respect to the input vector $\mathbf{u}$:

$$
\mathbf{B}(t) = \left.\frac{\partial\mathbf{f}(\mathbf{x}(t),\mathbf{u}(t))}{\partial\mathbf{u}}\right|_{\tilde{\mathbf{x}},\tilde{\mathbf{u}}} = \left.\begin{bmatrix} \frac{\partial f_1}{\partial u_1} & \cdots & \frac{\partial f_1}{\partial u_p} \\ \frac{\partial f_n}{\partial u_1} & \cdots & \frac{\partial f_n}{\partial u_p} \end{bmatrix}\right|_{\tilde{\mathbf{x}},\tilde{\mathbf{u}}} \in R^{n\times p} \tag{29}
$$

An analogous procedure applied to $\delta\mathbf{y}(t)$ yields:

$$
\begin{aligned}
\delta\mathbf{y}(t) &= \mathbf{y}(t) - \tilde{\mathbf{y}}(t) \\
&= \mathbf{g}(\mathbf{x}(t),\mathbf{u}(t)) - \mathbf{g}(\tilde{\mathbf{x}}(t),\tilde{\mathbf{u}}(t)) \\
&\approx \left.\frac{\partial\mathbf{g}(\mathbf{x}(t),\mathbf{u}(t))}{\partial\mathbf{x}}\right|_{\tilde{\mathbf{x}},\tilde{\mathbf{u}}}\delta\mathbf{x}(t) + \left.\frac{\partial\mathbf{g}(\mathbf{x}(t),\mathbf{u}(t))}{\partial\mathbf{u}}\right|_{\tilde{\mathbf{x}},\tilde{\mathbf{u}}}\delta\mathbf{u}(t) \\
&= \mathbf{C}(t)\delta\mathbf{x}(t) + \mathbf{D}(t)\delta\mathbf{u}(t)
\end{aligned} \tag{30}
$$

Where $\mathbf{C}(t)$ represents the Jacobian matrix of $\mathbf{g}$ with respect to the state vector $\mathbf{x}$:

$$
\mathbf{C}(t) = \left.\frac{\partial\mathbf{g}(\mathbf{x}(t),\mathbf{u}(t))}{\partial\mathbf{x}}\right|_{\tilde{\mathbf{x}},\tilde{\mathbf{u}}} = \left.\begin{bmatrix} \frac{\partial g_1}{\partial x_1} & \cdots & \frac{\partial g_1}{\partial x_n} \\ \frac{\partial g_q}{\partial x_1} & \cdots & \frac{\partial g_q}{\partial x_n} \end{bmatrix}\right|_{\tilde{\mathbf{x}},\tilde{\mathbf{u}}} \in R^{q\times n} \tag{31}
$$

whereas $\mathbf{D}(t)$ represents the Jacobian matrix of $\mathbf{g}$ with respect to the input vector $\mathbf{u}$:

$$
\mathbf{D}(t) = \left.\frac{\partial\mathbf{g}(\mathbf{x}(t),\mathbf{u}(t))}{\partial\mathbf{u}}\right|_{\tilde{\mathbf{x}},\tilde{\mathbf{u}}} = \left.\begin{bmatrix} \frac{\partial g_1}{\partial u_1} & \cdots & \frac{\partial g_1}{\partial u_p} \\ \frac{\partial g_q}{\partial u_1} & \cdots & \frac{\partial g_q}{\partial u_p} \end{bmatrix}\right|_{\tilde{\mathbf{x}},\tilde{\mathbf{u}}} \in R^{q\times p} \tag{32}
$$

The linearized system around the equilibrium solution can therefore be written as follows:

$$
\begin{cases}
\delta\dot{\mathbf{x}}(t) = \mathbf{A}(t)\delta\mathbf{x}(t) + \mathbf{B}(t)\delta\mathbf{u}(t) \\[2ex]
\delta\mathbf{y}(t) = \mathbf{C}(t)\delta\mathbf{x}(t) + \mathbf{D}(t)\delta\mathbf{u}(t)
\end{cases} \tag{33}
$$

By reconsidering the state-space representation (19) and applying a Taylor series expansion about the specified equilibrium point, the resulting expressions are given by:

$$
\sin\theta = \theta - \frac{\theta^3}{3!} + \frac{\theta^5}{5!} - \ldots = \sum_{n=0}^{\infty}(-1)^n\frac{\theta^{2n+1}}{(2n+1)!} \qquad \cos\theta = 1 - \frac{\theta^2}{2!} + \frac{\theta^4}{4!} + \ldots = \sum_{n=0}^{\infty}(-1)^n\frac{\theta^{2n}}{(2n)!}
$$

In the case of small-angle approximations, the Taylor series of the sine and cosine functions reduce considerably, since higher-order terms are negligible relative to the leading terms. Indeed:

$$
\sin\theta \approx \sin\pi + \cos\pi(\theta-\pi) \approx \pi - \theta \quad \textit{and} \quad \cos\theta \approx \cos\pi - \sin\pi(\theta-\pi) \approx -1 \quad \textit{in proximity of} \quad \theta = \pi
$$

Substituting this into the state-space representation (19) yields:

$$\begin{cases} \dot{\mathbf{x}} = \begin{bmatrix} \dot{x}_1 \\ \dot{x}_2 \\ \dot{x}_3 \\ \dot{x}_4 \end{bmatrix} = \begin{bmatrix} \dot{x} \\ \ddot{x} \\ \dot{\theta} \\ \ddot{\theta} \end{bmatrix} = \begin{bmatrix} x_2 \\ \frac{m}{M} g\left(\pi - x_3\right) - \frac{1}{M\ell} b x_4 + \frac{1}{M}\left(u - c x_2\right) \\ x_4 \\ \frac{M+m}{M\ell} g\left(\pi - x_3\right) - \frac{M+m}{Mm\ell^2} b x_4 + \frac{1}{M\ell}\left(u - c x_2\right) \end{bmatrix} = \begin{bmatrix} f_1 \\ f_2 \\ f_3 \\ f_4 \end{bmatrix} \\ \mathbf{y} = \begin{bmatrix} x \\ \theta \end{bmatrix} = \begin{bmatrix} x_1 \\ x_3 \end{bmatrix} = \begin{bmatrix} g_1 \\ g_2 \end{bmatrix} \end{cases} \tag{34}$$

The components of the matrices $\mathbf{A}(t), \mathbf{B}(t), \mathbf{C}(t)$ and $\mathbf{D}(t)$ can now be determined:

$$\mathbf{A} = \begin{bmatrix} \frac{\partial f_1}{\partial x_1} & \frac{\partial f_1}{\partial x_2} & \frac{\partial f_1}{\partial x_3} & \frac{\partial f_1}{\partial x_4} \\ \frac{\partial f_2}{\partial x_1} & \frac{\partial f_2}{\partial x_2} & \frac{\partial f_2}{\partial x_3} & \frac{\partial f_2}{\partial x_4} \\ \frac{\partial f_3}{\partial x_1} & \frac{\partial f_3}{\partial x_2} & \frac{\partial f_3}{\partial x_3} & \frac{\partial f_3}{\partial x_4} \\ \frac{\partial f_4}{\partial x_1} & \frac{\partial f_4}{\partial x_2} & \frac{\partial f_4}{\partial x_3} & \frac{\partial f_4}{\partial x_4} \end{bmatrix}\Bigg|_{\tilde{\mathbf{x}},\tilde{\mathbf{u}}} = \begin{bmatrix} 0 & 1 & 0 & 0 \\ 0 & -\frac{c}{M} & -\frac{m}{M} g & -\frac{b}{M\ell} \\ 0 & 0 & 0 & 1 \\ 0 & -\frac{c}{M\ell} & -\frac{M+m}{M\ell} g & -\frac{M+m}{Mm\ell^2} b \end{bmatrix}, \quad \mathbf{B} = \begin{bmatrix} \frac{\partial f_1}{\partial u} \\ \frac{\partial f_2}{\partial u} \\ \frac{\partial f_3}{\partial u} \\ \frac{\partial f_4}{\partial u} \end{bmatrix}\Bigg|_{\tilde{\mathbf{x}},\tilde{\mathbf{u}}} = \begin{bmatrix} 0 \\ \frac{1}{M} \\ 0 \\ \frac{1}{M\ell} \end{bmatrix},$$

$$\mathbf{C} = \begin{bmatrix} \frac{\partial g_1}{\partial x_1} & \frac{\partial g_1}{\partial x_2} & \frac{\partial g_1}{\partial x_3} & \frac{\partial g_1}{\partial x_4} \\ \frac{\partial g_2}{\partial x_1} & \frac{\partial g_2}{\partial x_2} & \frac{\partial g_2}{\partial x_3} & \frac{\partial g_2}{\partial x_4} \end{bmatrix}\Bigg|_{\tilde{\mathbf{x}},\tilde{\mathbf{u}}} = \begin{bmatrix} 1 & 0 & 0 & 0 \\ 0 & 0 & 1 & 0 \end{bmatrix}, \quad \mathbf{D} = \begin{bmatrix} \frac{\partial g_1}{\partial u} & \frac{\partial g_2}{\partial u} \end{bmatrix}\Bigg|_{\tilde{\mathbf{x}},\tilde{\mathbf{u}}} = \begin{bmatrix} 0 \\ 0 \end{bmatrix}$$

Thus, one arrives at the final expression of the linearized state-space model:

$$\begin{cases} \begin{bmatrix} \dot{x}_1 \\ \dot{x}_2 \\ \dot{x}_3 \\ \dot{x}_4 \end{bmatrix} = \begin{bmatrix} 0 & 1 & 0 & 0 \\ 0 & -\frac{c}{M} & -\frac{m}{M} g & -\frac{b}{M\ell} \\ 0 & 0 & 0 & 1 \\ 0 & -\frac{c}{M\ell} & -\frac{M+m}{M\ell} g & -\frac{M+m}{Mm\ell^2} b \end{bmatrix} \begin{bmatrix} x_1 \\ x_2 \\ x_3 \\ x_4 \end{bmatrix} + \begin{bmatrix} 0 \\ \frac{1}{M} \\ 0 \\ \frac{1}{M\ell} \end{bmatrix} u \\ y = \begin{bmatrix} 1 & 0 & 0 & 0 \\ 0 & 0 & 1 & 0 \end{bmatrix} \begin{bmatrix} x_1 \\ x_2 \end{bmatrix} + \begin{bmatrix} 0 \\ 0 \end{bmatrix} u \end{cases} \tag{35}$$

## 4.2. Transfer functions $G_{xu}(s)$ and $G_{\theta u}(s)$

The focus can now be shifted to the determination of the transfer function $\mathbf{G}(s)$ [5]. In mathematical models of dynamical systems, the transfer function represents the behaviour of a time-invariant system in the frequency domain by relating its input to its output. To establish this relationship, a generic linear time-invariant dynamical system is considered:

$$\begin{cases} \dot{\mathbf{x}} = \mathbf{A}\mathbf{x}(t) + \mathbf{B}\mathbf{u}(t) \\ \mathbf{y} = \mathbf{C}\mathbf{x}(t) + \mathbf{D}\mathbf{u}(t) \end{cases} \tag{36}$$

The system can now be transformed into the Laplace domain under zero initial conditions:

$$s\mathbf{X}(s) = \mathbf{A}\mathbf{X}(s) + \mathbf{B}\mathbf{U}(s) \quad -> \quad (s\mathbf{I} - \mathbf{A})\mathbf{X}(s) = \mathbf{B}\mathbf{U}(s) \quad -> \quad \mathbf{X}(s) = (s\mathbf{I} - \mathbf{A})^{-1}\mathbf{B}\mathbf{U}(s) \tag{37}$$

$$\mathbf{Y}(s) = \mathbf{C}\mathbf{X}(s) + \mathbf{D}\mathbf{U}(s) = \mathbf{C}(\mathbf{s}\mathbf{I} - \mathbf{A})^{-1}\mathbf{B}\mathbf{U}(s) + \mathbf{D}\mathbf{U}(s) \quad -> \quad \mathbf{Y}(s) = [\mathbf{C}(\mathbf{s}\mathbf{I} - \mathbf{A})^{-1}\mathbf{B} + \mathbf{D}]\mathbf{U}(s) \tag{38}$$

Therefore:

$$\mathbf{Y}(s) = \mathbf{G}(s)\mathbf{U}(s) \quad \textit{where} \quad \mathbf{G}(s) = \mathbf{C}(\mathbf{s}\mathbf{I} - \mathbf{A})^{-1}\mathbf{B} + \mathbf{D} \tag{39}$$

Equation (39) precisely describes how each input $\mathbf{u}(t)$ is transformed to produce the output $\mathbf{y}(t)$, taking into account the internal dynamics of the system ($\mathbf{A}$) as well as the ways in which the input affects the state ($\mathbf{B}$) and contributes to the output ($\mathbf{C}$ and $\mathbf{D}$). Having previously determined the matrices of the dynamical system under consideration, the corresponding transfer function $\mathbf{G}(s)$ can now be computed through the following steps:

$$\mathbf{G}(s) = \begin{bmatrix} G_{xu} \\ G_{\theta u} \end{bmatrix} = \begin{bmatrix} 1 & 0 & 0 & 0 \\ 0 & 0 & 1 & 0 \end{bmatrix} \begin{bmatrix} s & -1 & 0 & 0 \\ 0 & s+\frac{c}{M} & g\frac{m}{M} & \frac{b}{M\ell} \\ 0 & 0 & s & -1 \\ 0 & \frac{c}{M\ell} & g\frac{m+M}{M\ell} & s+b\frac{m+M}{Mm\ell^2} \end{bmatrix}^{-1} \begin{bmatrix} 0 \\ \frac{1}{M} \\ 0 \\ \frac{1}{M\ell} \end{bmatrix} \tag{40}$$

$$= \frac{1}{s^4 + \left(\frac{C}{M} + \frac{(m+M)b}{mM\ell^2}\right)s^3 + \left(\frac{(m+M)g}{M\ell} + \frac{bc}{mM\ell^2}\right)s^2 + \left(\frac{cg}{M\ell}\right)s} \begin{bmatrix} \frac{1}{M}s^2 + \frac{b}{mM\ell^2}s + \frac{g}{M\ell} \\ \frac{1}{M\ell}s^2 \end{bmatrix} \tag{41}$$

## 4.3. Pole-zero map for both transfer functions

Once the expression of the transfer function of the dynamic system has been determined in the paragraph 4.2, its poles and zeros can be graphically represented on the Laplace plane, defined by the real and imaginary axes [6]. Poles and zeros correspond, respectively, to the values that nullify the denominator and the numerator of the transfer function, and are typically indicated by an 'o' and an 'x'. The analysis of this diagram is essential for several reasons, including the assessment of system stability. In fact, for continuous-time systems such as the one under consideration, stability requires that all poles lie in the left half of the Laplace plane As shown in Figure 20, all poles satisfy this condition, confirming (48) is indeed stable.

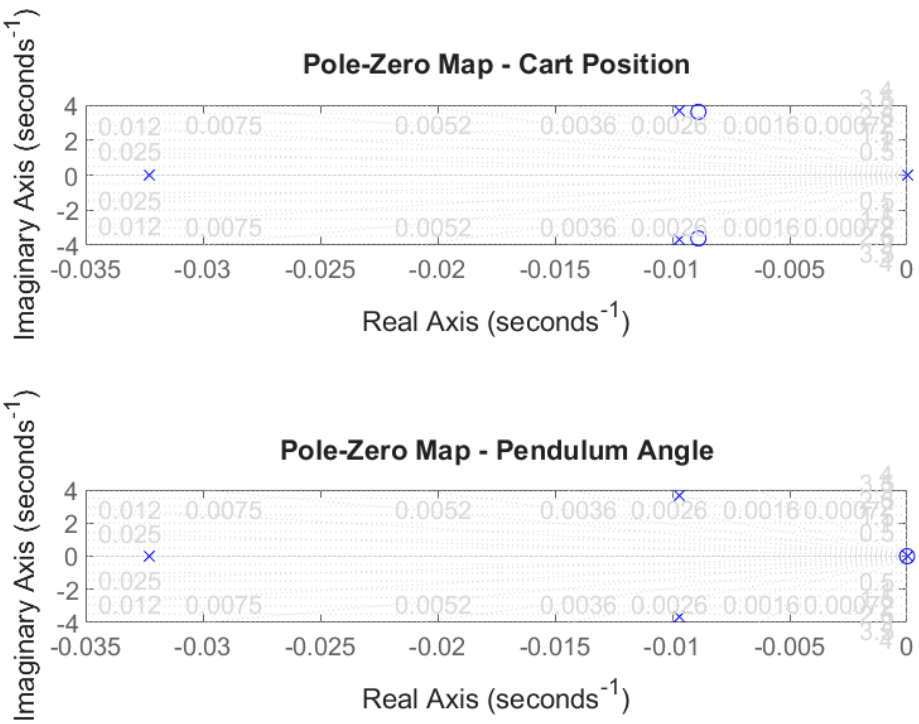


Figure 11: Pole-zero map for both transfer functions

## 4.4. Asymptotic and real Bode diagram for both transfer functions

To analyze the behaviour of the transfer function, it is useful to represent its amplitude diagram, which displays the magnitude (in dB) of the transfer function, $|G(j\omega)|$, as a function of frequency $\omega$ on a logarithmic scale, and the phase diagram, which shows the argument of the transfer function, $\angle G(j\omega)$, also as a function of frequency [7]. These diagrams are widely used due to their utility, as they allow for:

- Analyzing the frequency response of the system, i.e., how it reacts to sinusoidal inputs at different frequencies;
- Assessing the stability and performance of a feedback system (e.g., using the Bode or Nyquist criterion);
- Designing controllers (e.g., through compensation techniques such as lead, lag, etc.);
- Easily visualizing the effect of poles and zeros, thanks to the logarithmic scale and the linear approximation.

Two different types of Bode plots can be represented:

- The real Bode plots, as shown in Figure 12, are obtained by computing the exact magnitude $|G(j\omega)|$ and phase $\angle G(j\omega)$ of the transfer function, and they represent the actual physical behavior of the system. These plots exhibit smoother curves, especially in the transition regions between segments with different slopes.
- The asymptotic Bode plots, as illustrated in Figure **??**, are instead a simplification of the real plots. They consist of piecewise linear approximations of the magnitude and phase behavior. These are commonly used for quick hand estimations and to gain a general understanding of the system's response.

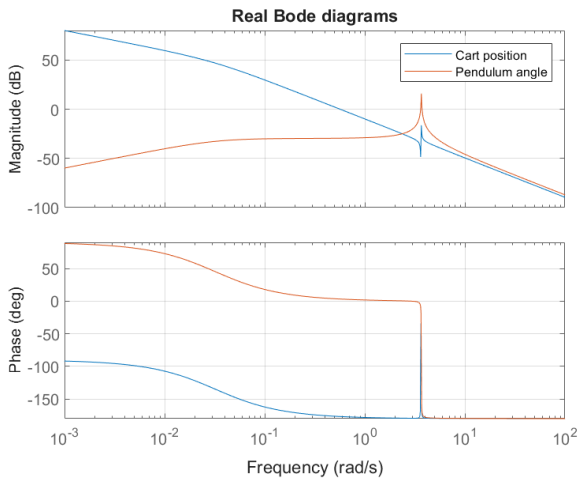


Figure 12: Real Bode diagram for both transfer functions

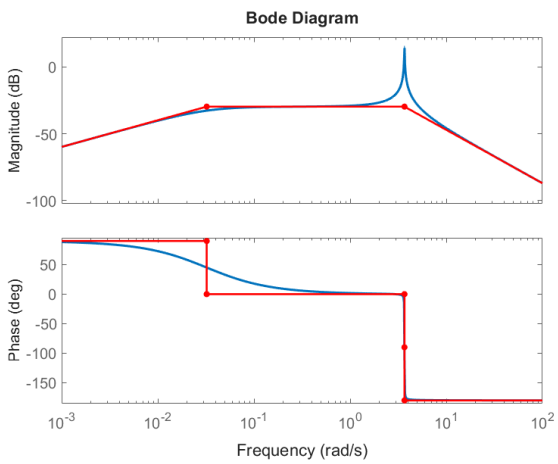


(a) Asymptotic Bode diagram for pendulum's angle

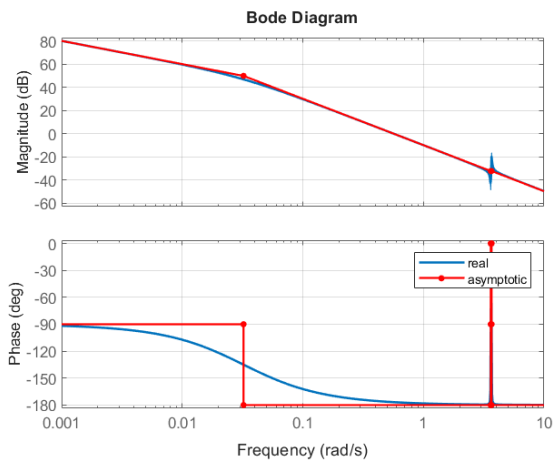


(b) Asymptotic Bode diagram for cart's position

Figure 13: Asymptotic Bode diagrams for the cart position and pendulum angle

# 5. Task 1.5: Comparison of the nonlinear and linear response (MATLAB®) code

In this section, the open-loop response of a nonlinear model and its linearized counterpart will be compared, both derived from the same original system. The main objective is to assess the accuracy of the linearization of the inverted pendulum as the input energy increases around the unstable equilibrium point

$$\mathbf{x}_0 = \begin{bmatrix} x \\ \dot{x} \\ \theta \\ \dot{\theta} \end{bmatrix} = \begin{bmatrix} 0 \\ 0 \\ \pi \\ 0 \end{bmatrix} \tag{42}$$

This will allow for a clearer understanding of the limitations of the linear approximation and the range within which it remains accurate.

Simulations are carried out over the time interval $[0 - 20]$ s. Three input scenarios are considered, consisting of a horizontal pulse force $F(t)$ applied to the cart between $t = 1$ s and $t = 2$ s, with varying amplitudes:

(a) Pulse force of amplitude 1 N

(b) Pulse force of amplitude 5 N

(c) Pulse force of amplitude 25 N

For each scenario, both the linear and nonlinear system responses are simulated using MATLAB®. The cart position $x(t)$ and pendulum angle $\theta(t)$ are plotted in the same figure to allow for direct visual comparison.

For the linearized model, the chosen equilibrium point is the angle $\theta_0 = \pi$. Consequently, the system output $\theta_{\text{lin}}(t)$ from the linearized model represents the deviation from this equilibrium condition, i.e., $\theta_{\text{lin}}(t) = \theta(t) - \pi$. In order to recover the absolute pendulum angle, it is therefore necessary to add $\pi$ back to the output of lsim, which was used to compute the linear response: $\theta(t) = \theta_{\text{lin}}(t) + \pi$.

## Case (a): Pulse Force of 1 N

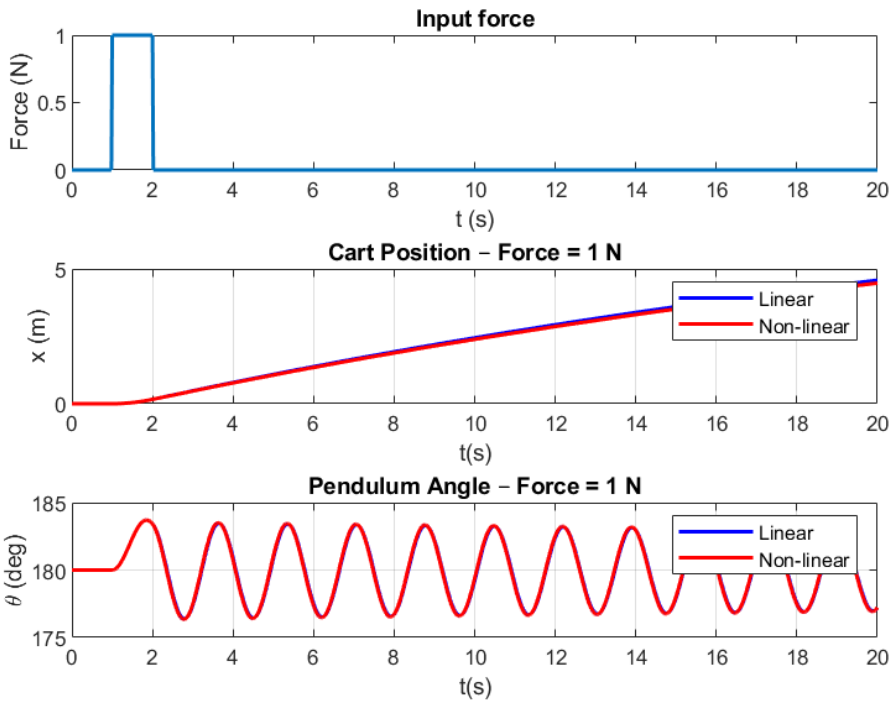


Figure 14: Comparison Between Linear and Nonlinear Responses for a 1 N pulse

This plot helps visualize the responses of both the linear and nonlinear approaches. In this low-force scenario, both the cart position $x$ and the pendulum angle $\theta$ exhibit trajectories that are nearly identical. This behavior can be explained by the fact that the nonlinear terms remain of very low order. The nonlinear dynamics remain close to the equilibrium and the discrepancy is minimal.

## Case (b): Pulse Force of 5 N

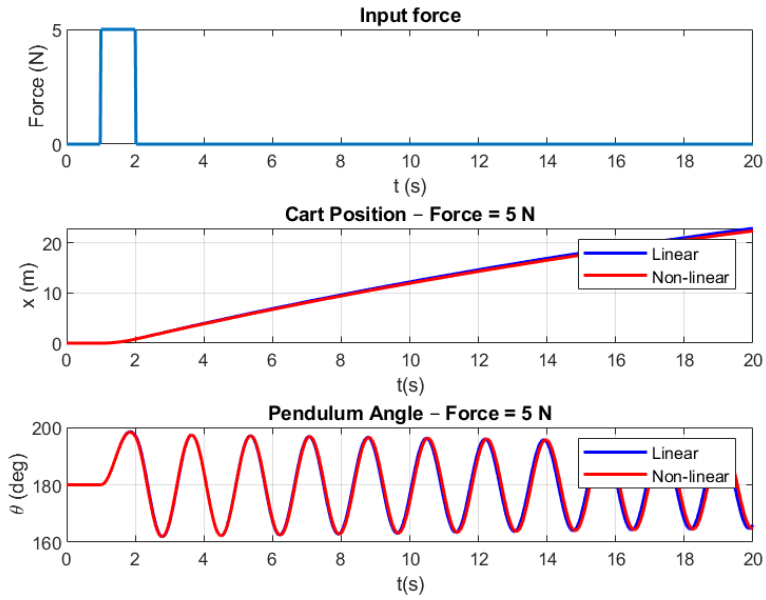


Figure 15: Confronto linear e nonlinear responses per l'impulso di 5 N

With increased excitation, the nonlinear response begins to deviate noticeably from the linear approximation. Specifically, the red line (representing the cart position) is slightly lower in the non-linear case, while the blue line (representing the pendulum angle) underestimates the amplitude and exhibits a higher frequency. As the applied force increases, the influence of non-linear contributions becomes more significant, though still within an acceptable range.

## Case (c): Pulse force of 25 N

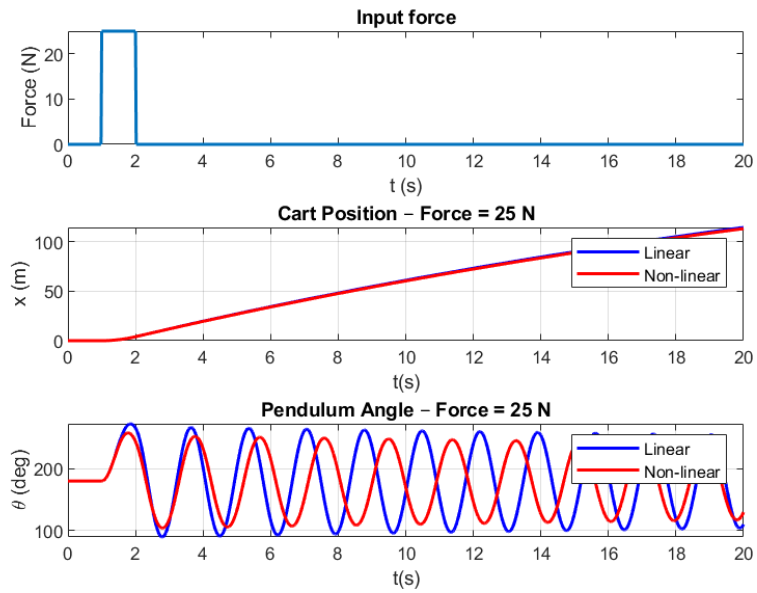


Figure 16: Comparison Between Linear and Nonlinear Responses for a 25 N Impulse

Under this high-force input, the limitations of the linear model become clear. The nonlinear system exhibits behaviors which are not captured by the linear approximation.

These plots clearly highlight the differing behaviors between the linearized and the full nonlinear models. For the cart position $x$, a discrepancy of approximately 10 meters is observed. In the case of the pendulum angle, the non-linear model exhibits asymmetric behavior. This divergence arises from the inadequacy of the linear approximation, which fails to capture asymmetries and frequency variations introduced by the nonlinear terms.

## 5.1. Conclusion

This analysis shows that the linearized model remains valid only for low impulsive forces, thus limiting its applicability in the study of an inverted pendulum. In fact, for higher forces that impart greater energy to the system, the rod undergoes significant deviations, making the use of the full non-linear model necessary.

# 6. Task 1.6: Comparison of the nonlinear and linear open-loop responses (Simulink®)

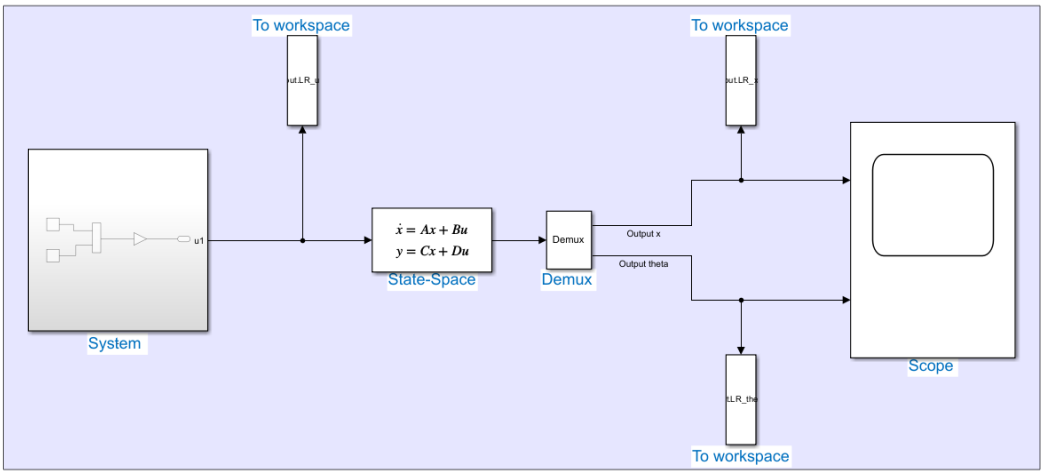


Figure 17: Block Diagram of the Simulink® Model

In this section, the same analysis performed in the previous task is repeated using the Simulink® environment, with the aim of confirming the system dynamics.
First, a model of the linearized system was implemented using the State-Space block. For the nonlinear case, the model based on the M-function described in Section 3 was used.
The data from the two different models were merged in Matlab® and compared with each other.

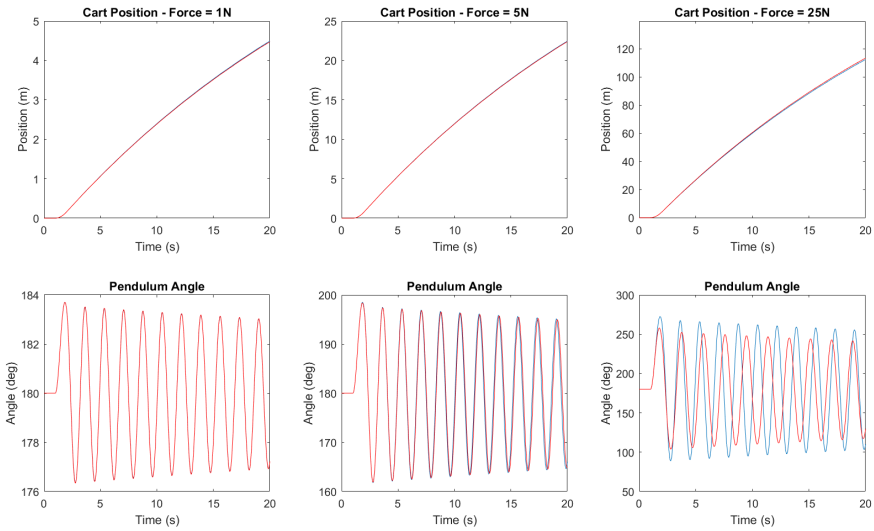


Figure 18: Simulation of System Response to the Pulse Input in Simulink®

The comparison conducted in Simulink® confirms the observations previously made in Matlab®: the linearization around the chosen unstable equilibrium is valid only when the amplitude of the applied force remains small; otherwise, its accuracy significantly decreases. Only by employing a non-linear model is it possible to capture the asymmetries that emerge under high impulsive forces

# Part 2: Introduction

In the second part, the aim is to extend the study conducted thus far by implementing a feedback control strategy on the same system. The procedure involves deriving the linearized model around an unstable equilibrium point, computing its transfer functions, poles, zeros, and Bode plots, and designing both a proportional controller and a PD controller. The objective is to assess the capability of stabilizing the inverted pendulum within the specified requirements, particularly in terms of peak time and overshoot. The data used are summarized in the following table:

| **Parameters** | **Value** | **Unit of measure** |
|---|---|---|
| Cart mass, $M$ | 3.0 | $kg$ |
| Point mass, $m$ | 0.1 | $kg$ |
| Length of the rod, $l$ | 0.75 | $m$ |
| Gravity acceleration, $g$ | 9.81 | $m/s^2$ |
| Friction coefficient of the guide, $c$ | 0 | $N/m/s$ |
| Friction coefficient of the hinged rod, $b$ | 0 | $Nm/rad/s$ |

Table 3: Initial Parameters

It is important to highlight some fundamental differences with respect to the first part of the project. First, the convention regarding the angle direction is reversed, so that a positive inclination now corresponds to a rotation in the opposite direction compared to the previous definition. Secondly, two types of forces act on the cart: the input force $u$, which represents the contribution of a control action applied to the system, and the disturbance force $d$, which simulates the effect of external perturbations. Finally, the dissipative term associated with friction is no longer present, resulting in a dynamic behavior without passive damping.

# 1. Task 2.1: Mathematical model

This section aims to derive the mathematical model of the inverted pendulum, where a disturbance is present, and the angle $\theta$ is defined as positive in the counterclockwise direction. For a more detailed procedure of the model, reference can be made to Section Task 1.1: Mathematical model.

The degrees of freedom of this system remain two, namely $x$ and $\theta$. To derive the model, Lagrange's equations and the non-linear state-space representation will be applied.

## 1.1. Calculation of the equation of motion through Lagrange's equation

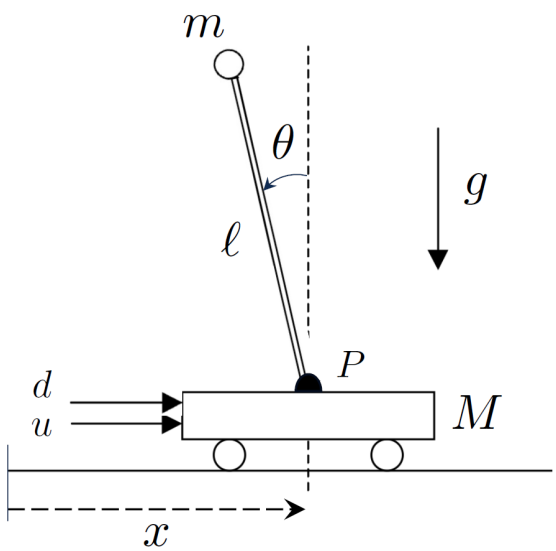


Figure 19: Inverted pendulum on a cart model

First, the mass of the cart can be considered concentrated at point $A$, and the point mass $m$ coincides with point $B$. The kinematics of these are defined as follows:

$$
\begin{aligned}
&P_A : \begin{cases} x_A = x \\ y_A = 0 \end{cases} && v_A : \begin{cases} \dot{x}_A = \dot{x} \\ \dot{y}_A = 0 \end{cases} && a_A : \begin{cases} \ddot{x}_A = \ddot{x} \\ \ddot{y}_A = 0 \end{cases} \\
&P_B : \begin{cases} x_B = x - \ell \sin\theta \\ y_B = \ell \cos\theta \end{cases} && v_B : \begin{cases} \dot{x}_B = \dot{x} - \ell \cos\theta\, \dot{\theta} \\ \dot{y}_B = -\ell \sin\theta\, \dot{\theta} \end{cases} && a_B : \begin{cases} \ddot{x}_B = \ddot{x} - \ell \cos\theta\, \ddot{\theta} + \ell \sin\theta\, \dot{\theta}^2 \\ \ddot{y}_B = -\ell \sin\theta\, \ddot{\theta} - \ell \cos\theta\, \dot{\theta}^2 \end{cases}
\end{aligned}
\tag{43}
$$

Now, to obtain the equations of motion, Lagrange's equations (4) are used. By substituting the kinematic equations (43), considering that the viscous component $D$ is absent due to the initial assumptions, and taking the virtual work as $\delta L = (u+d)\delta x$, the following system is obtained:

$$
\begin{cases} (M+m)\ddot{x} - m\ell \cos\theta\, \ddot{\theta} + m\ell \sin\theta\, \dot{\theta}^2 = u + d \\ m\ell^2 \ddot{\theta} - m\ell \cos\theta\, \ddot{x} - mg\ell \sin\theta = 0 \end{cases}
\tag{44}
$$

As done previously, it is convenient for the following steps to rewrite the equations of motion, explicitly showing the dependence on $\ddot{x}$ and $\ddot{\theta}$:

$$
\begin{cases} \ddot{x} = \dfrac{1}{M+m} \left( m\ell \cos\theta\, \ddot{\theta} - m\ell \sin\theta\, \dot{\theta}^2 - c\dot{x} + u + d \right) \\ \ddot{\theta} = \dfrac{1}{\ell} \cos\theta\, \ddot{x} - \dfrac{b}{m\ell^2} \dot{\theta} + \dfrac{g}{\ell} \sin\theta \end{cases}
\tag{45}
$$

## 1.2. Representation of the nonlinear system in state-space

In this section, the model will be reformulated according to the nonlinear state-space representation of the system. A more detailed discussion has been provided in Task 1.1: Mathematical model, and only the similarities and differences will be highlighted.
The state-space vector remains the same, although it is useful to note that $\theta$ is inverted compared to before:

$$
\mathbf{x} = \begin{bmatrix} x \\ \dot{x} \\ \theta \\ \dot{\theta} \end{bmatrix} = \begin{bmatrix} x_1 \\ x_2 \\ x_3 \\ x_4 \end{bmatrix} \qquad \dot{\mathbf{x}} = \begin{bmatrix} \dot{x} \\ \ddot{x} \\ \dot{\theta} \\ \ddot{\theta} \end{bmatrix} = \begin{bmatrix} \dot{x}_1 \\ \dot{x}_2 \\ \dot{x}_3 \\ \dot{x}_4 \end{bmatrix}
\tag{46}
$$

The force $f$, on the other hand, becomes equal to the sum $u + d$ since the dynamics caused by friction are no longer present. Therefore, the state equation will have one less term and will assume the subsequent form:

$$
\begin{cases} \dot{\mathbf{x}} = \begin{bmatrix} \dot{x}_1 \\ \dot{x}_2 \\ \dot{x}_3 \\ \dot{x}_4 \end{bmatrix} = \begin{bmatrix} \dot{x} \\ \ddot{x} \\ \dot{\theta} \\ \ddot{\theta} \end{bmatrix} = \begin{bmatrix} x_2 \\ -\frac{m\ell \sin x_3}{M+m\sin^2 x_3} x_4^2 + \frac{m\, g \sin x_3 \cos x_3}{M+m\sin^2 x_3} + \frac{u+d}{(M+m\sin^2 x_3)} x_4 \\ x_4 \\ -\frac{m \sin x_3 \cos x_3}{M+m\sin^2 x_3} x_4^2 + \frac{(M+m)\, g \sin x_3}{\ell(M+m\sin^2 x_3)} + \frac{(u+d)\cos x_3}{\ell(M+m\sin^2 x_3)} \end{bmatrix} \\ \mathbf{y} = \begin{bmatrix} x \\ \theta \end{bmatrix} = \begin{bmatrix} x_1 \\ x_3 \end{bmatrix} \end{cases}
\tag{47}
$$

## 1.3. Linearized EOM of the system

Referring to the mathematical treatment already extensively analyzed in section 4.1, the dynamic system can be linearized, and, in particular, its state equation, by applying a Taylor series expansion about the subsequent equilibrium point:

$$
\dot{\mathbf{x}}_{eq} = \begin{bmatrix} 0 \\ 0 \\ 0 \\ 0 \end{bmatrix}
\tag{48}
$$

In the case of small-angle approximations, the Taylor series of the sine and cosine functions reduce considerably, since higher-order terms are negligible relative to the leading terms. Indeed:

$$
\sin\theta \approx x \quad \textit{and} \quad \cos\theta \approx 1 \quad \textit{in proximity to} \quad x = 0
$$

Substituting this into the state-space representation (46) yields:

$$
\begin{cases}
\dot{\mathbf{x}} = \begin{bmatrix} \dot{x}_1 \\ \dot{x}_2 \\ \dot{x}_3 \\ \dot{x}_4 \end{bmatrix} = \begin{bmatrix} \dot{x} \\ \ddot{x} \\ \dot{\theta} \\ \ddot{\theta} \end{bmatrix} = \begin{bmatrix} x_2 \\ \frac{mg}{M} x_3 + \frac{u+d}{M} \\ x_4 \\ \frac{(M+m)g}{M\ell} x_3 + \frac{u+d}{M\ell} \end{bmatrix} \\
\mathbf{y} = \begin{bmatrix} x \\ \theta \end{bmatrix} = \begin{bmatrix} x_1 \\ x_3 \end{bmatrix}
\end{cases}
\tag{49}
$$

### 1.4. Representation of the linear system in state-space

The components of the matrices $A(t), B(t), C(t)$ and $D(t)$ can now be determined:

$$
A = \left.\begin{bmatrix} \frac{\partial f_1}{\partial x_1} & \frac{\partial f_1}{\partial x_2} & \frac{\partial f_1}{\partial x_3} & \frac{\partial f_1}{\partial x_4} \\ \frac{\partial f_2}{\partial x_1} & \frac{\partial f_2}{\partial x_2} & \frac{\partial f_2}{\partial x_3} & \frac{\partial f_2}{\partial x_4} \\ \frac{\partial f_3}{\partial x_1} & \frac{\partial f_3}{\partial x_2} & \frac{\partial f_3}{\partial x_3} & \frac{\partial f_3}{\partial x_4} \\ \frac{\partial f_4}{\partial x_1} & \frac{\partial f_4}{\partial x_2} & \frac{\partial f_4}{\partial x_3} & \frac{\partial f_4}{\partial x_4} \end{bmatrix}\right|_{\tilde{x},\tilde{u}} = \begin{bmatrix} 0 & 1 & 0 & 0 \\ 0 & 0 & \frac{mg}{M} & 0 \\ 0 & 0 & 0 & 1 \\ 0 & 0 & \frac{(M+m)}{M\ell} g & 0 \end{bmatrix}, \quad B_u = \left.\begin{bmatrix} \frac{\partial f_1}{\partial u} \\ \frac{\partial f_2}{\partial u} \\ \frac{\partial f_3}{\partial u} \\ \frac{\partial f_4}{\partial u} \end{bmatrix}\right|_{\tilde{x},\tilde{u}} = \begin{bmatrix} 0 \\ \frac{1}{M} \\ 0 \\ \frac{1}{M\ell} \end{bmatrix}, \quad B_d = \left.\begin{bmatrix} \frac{\partial f_1}{\partial d} \\ \frac{\partial f_2}{\partial d} \\ \frac{\partial f_3}{\partial d} \\ \frac{\partial f_4}{\partial d} \end{bmatrix}\right|_{\tilde{x},\tilde{u}} = \begin{bmatrix} 0 \\ \frac{1}{M} \\ 0 \\ \frac{1}{M\ell} \end{bmatrix}
$$

$$
C = \left.\begin{bmatrix} \frac{\partial g_1}{\partial x_1} & \frac{\partial g_1}{\partial x_2} & \frac{\partial g_1}{\partial x_3} & \frac{\partial g_1}{\partial x_4} \\ \frac{\partial g_2}{\partial x_1} & \frac{\partial g_2}{\partial x_2} & \frac{\partial g_2}{\partial x_3} & \frac{\partial g_2}{\partial x_4} \end{bmatrix}\right|_{\tilde{x},\tilde{u}} = \begin{bmatrix} 1 & 0 & 0 & 0 \\ 0 & 0 & 1 & 0 \end{bmatrix}, \quad D_u = \left.\begin{bmatrix} \frac{\partial g_1}{\partial u} \\ \frac{\partial g_2}{\partial u} \end{bmatrix}\right|_{\tilde{x},\tilde{u}} = \begin{bmatrix} 0 \\ 0 \end{bmatrix}, \quad D_d = \left.\begin{bmatrix} \frac{\partial g_1}{\partial d} \\ \frac{\partial g_2}{\partial d} \end{bmatrix}\right|_{\tilde{x},\tilde{u}} = \begin{bmatrix} 0 \\ 0 \end{bmatrix}
$$

Thus, one arrives at the final expression of the linearized state-space model:

## 2. Task 2.2: open-loop transfer function

The objective of this section is to derive the open-loop transfer functions that relate the inputnamely, the applied force $f$ to the two output variables: $x$, representing the cart position, and $\theta$, representing the pendulum angle. The analysis is based on the unstable equilibrium condition occurring at $\theta_{eq} = 0$, which corresponds to the pendulum being in the upright position. The poles and zeros of the transfer function will then be examined to assess the actual stability of the system.

### 2.1. Expression of the open-loop transfer function $G(s)$

Based on the linearized equations, the transfer function $G(s)$ is obtained, defined as:

$$
G(s) = C(sI - A)^{-1}B + D \tag{50}
$$

For the sake of brevity, the intermediate steps are omitted, and only the final formulation is presented:

$$
G(s) = \begin{bmatrix} G_x \\ G_\theta \end{bmatrix} = \begin{bmatrix} 1 & 0 & 0 & 0 \\ 0 & 0 & 1 & 0 \end{bmatrix} \begin{bmatrix} s & -1 & 0 & 0 \\ 0 & s & g\frac{m}{M} & 0 \\ 0 & 0 & s & -1 \\ 0 & 0 & g\frac{m+M}{M\ell} & s & 0 \end{bmatrix}^{-1} \begin{bmatrix} 0 \\ \frac{1}{M} \\ 0 \\ \frac{1}{M\ell} \end{bmatrix} = \begin{bmatrix} \frac{s^2-g}{s^2(Mls^2-(m+M)g)} \\ \frac{1}{M\ell s^2+(M+m)g} \end{bmatrix} \tag{51}
$$

## 2.2. Pole-zero map

The pole-zero mapping was generated using the pzmap function available in Matlab®.

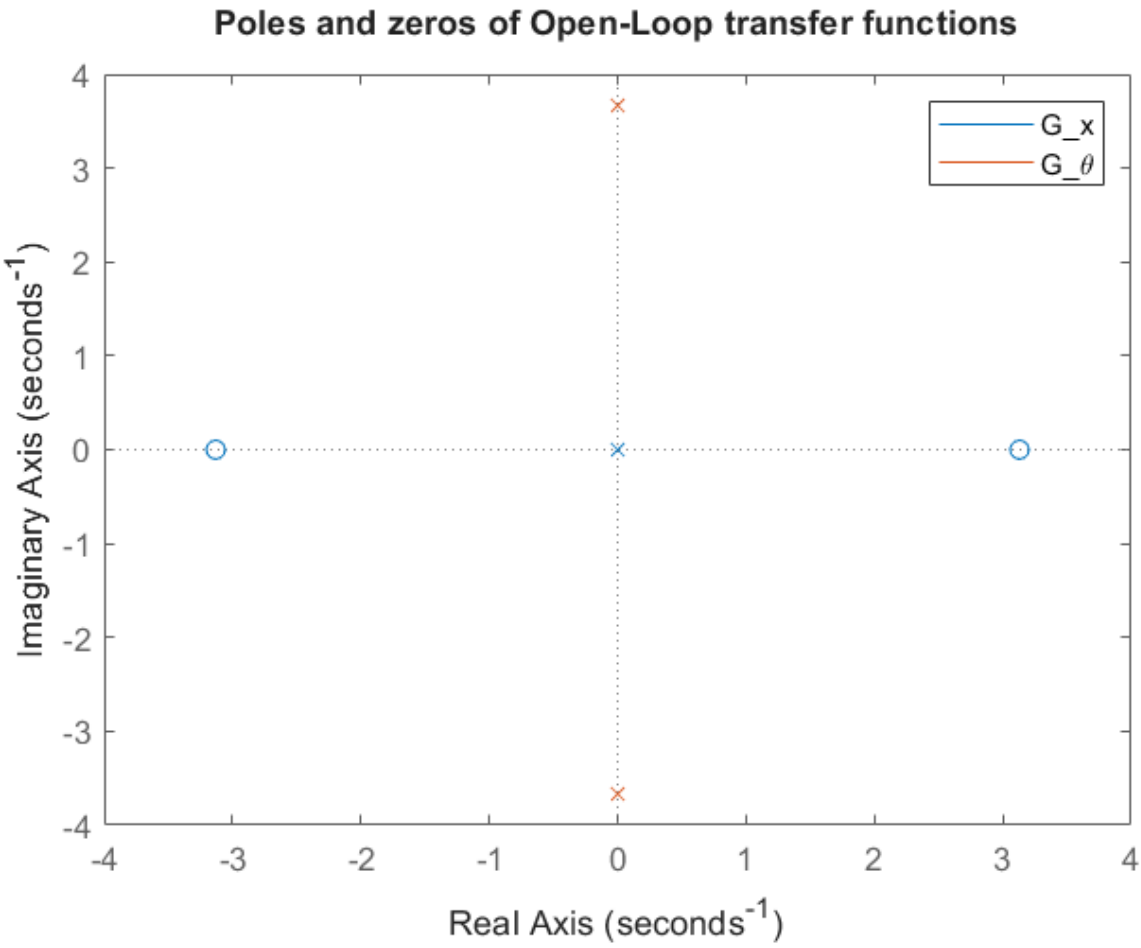


Figure 20: Pole-zero map

As shown in Figure 20, $G(s)_u$ exhibits a pole with a positive real part, which indicates an unstable behavior of the system. This behavior can be easily understood by considering the physical nature of the system: if a small deviation occurs from the vertical, the pendulum will no longer be in equilibrium.

## 2.3. Conclusion

The transfer functions and the pole-zero map confirm the stable or unstable nature of the two linearizations. In particular, the presence of unstable poles, as in the case of $\theta = 0$, necessitates the implementation of a control system to move them into the left-half plane.

This also serves as a preliminary analysis for designing a controller, as the pole-zero map allows the definition of the required gains to ensure stability.

# 3. Task 2.3: Proportional control for stabilization

In order to stabilize an inverted pendulum, such as the one analyzed in Task 2.2, a controller is required. In this section, the pendulum will be stabilized with a proportional controller, $R_p$, which is modeled as:

$$R(s) = k \tag{52}$$

subsequently, an analytical proof will be provided to demonstrate that this controller is not able to stabilize asymptotically the system, supported by root locus graphs.

## 3.1. Expression of the closed-loop transfer function $G_c^P(s) = \Theta(s)/D(s)$

Given the expression of the controller and the transfer function, composed of two elements: one representing the dynamics of the cart and the other representing the motion of the pendulum, it's possible to assemble the following block diagram:

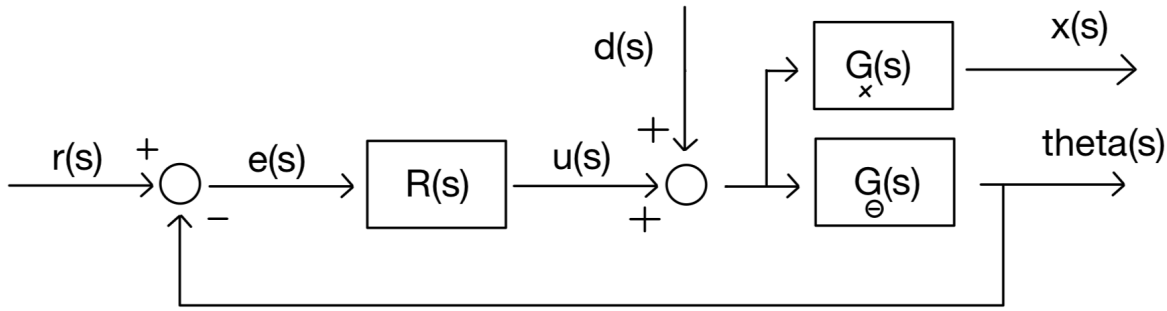


Figure 21: Block diagram

It's important to point out that only the angle of the pendulum is controlled. Which means that the cart is only affected by the disturbance and the pendulum's angle control force. Subsequently, the transfer function from the disturbance $d(s)$ to the angle of the pendulum $\Theta(s)$ can be written with the following formula:

$$\frac{\theta(s)}{d(s)} = G_c^P(s) = \frac{G_{theta}(s)}{1 + R_p(s)G_{theta}(s)} \tag{53}$$

which can be expanded, with the given function, with this expression:

$$G_c^P(s) = \frac{1}{Mls^2 - (m+M)g + k} \tag{54}$$

It's possible to observe that the denominator of this function, which contains the poles of the system, does not have a first-order element. This will be one of the factors that determine the inability of this controller to stabilize the system.

## 3.2. Inability of the proportional controller to stabilize the system

This controller is unable to control the angle of the pendulum: its behavior is either unstable or marginally stable. In order to prove this statement, consider the expression of the transfer function between the angle of the pendulum $\theta$ and the disturbance:

$$G_c^P(s) = \frac{1}{Mls^2 - (m+M)g + k} \tag{55}$$

From here, the objective is to find the expression of the poles of the system. It's important to point out that the poles determine the stability characteristics of the system. In general, a pole of a system can be written as follows:

$$s = \Re + i\Im \tag{56}$$

where $\Re$ is the real part of the pole and $\Im$ is its imaginary component. A system is asymptotically stable when all of the real parts of the poles are negative. This statement can be expressed as:

$$\Re < 0 \tag{57}$$

After defining the stability conditions, the next step is to find the poles of the transfer function $G_c^P(s)$. These can be determined by calculating the roots of the denominator of the transfer function, which correspond to the characteristic equation of the system. It can be formulated as follows:

$$M\ell s^2 - (m+M)g + k = 0 \tag{58}$$

which can be manipulated to find this expression:

$$s^2 = \frac{(m+M)g - k}{Ml} \tag{59}$$

which results in the expression of the poles, which are:

$$s_{1,2} = \pm\sqrt{\frac{(m+M)g - k}{M\ell}} \tag{60}$$

From here, it's possible to notice that the stability of the system depends on the value of the proportional constant of the controller. For example, if $k$ is very small compared to $(m+M)g$, the system will have two real poles, and one of them will have a positive value, which results in an unstable system. In substance, the system will either:

- have 2 real poles, one negative and one positive, which will make the system unstable
- have 2 complex conjugates poles, which will make the system marginally stable

### 3.2.1. Controller-Induced Marginal Stability

In order to achieve marginal stability, which occurs when all the real parts of the poles are equal to zero, a manipulation of the controller's constant $k$ is needed. In this particular case, the poles can be either real or imaginary. In order to have imaginary poles,which automatically cancel their real part, or null real poles, this condition needs to be imposed:

$$\frac{(m+M)g-k}{M\ell} \leq 0 \tag{61}$$

which results in the following inequality:

$$k \geq (m+M)g \tag{62}$$

This means that the controller renders the systems marginally stable when k is greater than $(m+M)g$. To summarize:

| Values of k | Condition |
|---|---|
| $k < (m+M)g$ | Unstable |
| $k \geq (m+M)g$ | Marginally stable |

Table 4: Stability as $k$ varies

there is no value of $k$ that makes the system stable.

## 3.3. Root Locus of $G_c^P(s)$

The behavior of the system with a proportional controller can be observed and analyzed through its root locus [8].

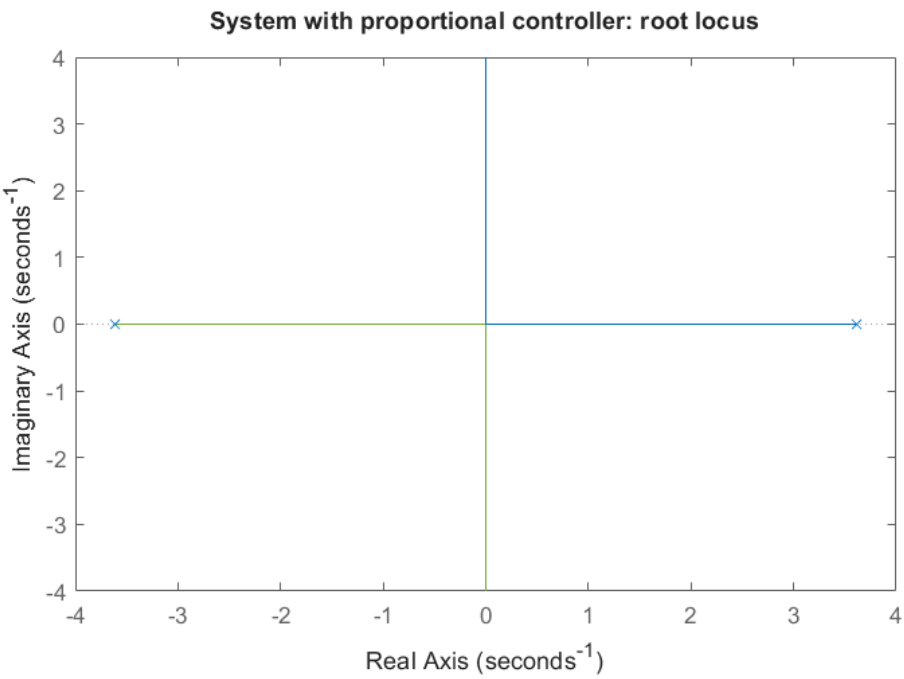


Figure 22: Root locus of $G_c^P(s)$

This graph clearly represents the previous analysis regarding the poles of the system. It's possible to observe that the poles are initially real, one positive and one negative. Subsequently, the poles become complex with no real part. This means that:

- The horizontal lines represent the controlled system's behavior when $k$ is smaller than $(m+M)g$
- The vertical lines represent the controlled system's behavior when $k$ is greater than $(m+M)g$

In the next task, a Proportional-Derivative controller for the pendulum will be designed. It will have the ability to stabilize the inverted pendulum, but it won't control the position of the cart.

# 4. Task 2.4: Proportional-Derivative (PD) control for stabilization

This task focuses on the design, analysis, and simulation of a Proportional-Derivative (PD) control strategy for stabilizing an inverted pendulum system [9]. The objective is to evaluate the closed-loop response to external disturbances and tune the control gains to meet specific time-domain performance requirements. The task also involves both analytical and numerical validation of the controller using MATLAB® and Simulink® environments.

## 4.1. Expression of the closed-loop transfer functions

The objective in this task is to analyze the closed-loop behavior of the system under the influence of external disturbances. The effect of a disturbance force $d(s)$ acting on the cart is studied in the presence of a proportional-derivative (PD) control action.

The closed-loop transfer function from the disturbance input to the pendulum angle is analytically derived using classical control theory.
The reference signal is assumed to be identically zero, i.e., $r(s) = 0$, to isolate and analyze the disturbance rejection capabilities of the controller.
The control law under consideration is defined in the Laplace domain as:

$$R(s) = k_P + sk_D \qquad k_P > 0, \quad k_D > 0. \tag{63}$$

The resulting closed-loop system can be represented with the following block diagram to better visualize the flow of signals:

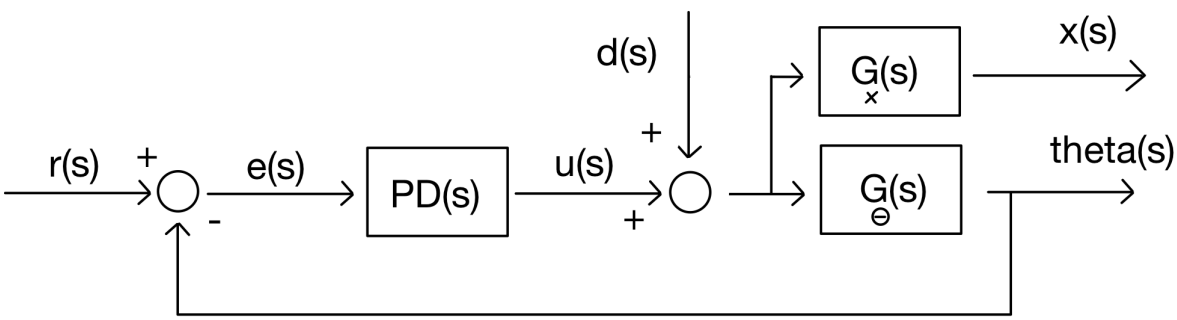


Figure 23: Block diagram with the Proportional Controller PD

The open-loop transfer function between $\theta(s)$ and $u(s)$ , (51), has the following formulation:

$$\frac{\theta(s)}{u(s)} = \frac{1}{M^2 - (m+M)g} \tag{64}$$

At the same time, the open-loop transfer function between the input $u(s)$ and the position of the cart $x(s)$, referring to equation (51), has the following expression:

$$\frac{x(s)}{u(s)} = \frac{1}{Ms^2} - \frac{mg}{Ms^2(-M\ell s^2 + Mg + mg)} \tag{65}$$

Consequently, it's possible to find the closed-loop formulation of the transfer function between $\theta(s)$, $x(s)$ and $d(s)$ with the following expressions:

$$G_\theta^{PD}(s) = \frac{\theta(s)}{d(s)} = \frac{G_\theta(s)}{1 + G_\theta(s)R_{PD}(s)} \qquad G_x^{PD}(s) = \frac{x(s)}{d(s)} = \frac{G_x(s)}{1 + G_\theta(s)R_{PD}(s)} \tag{66}$$

It's important to point out the expression of $G_x^{PD}(s)$. A generic equation for a transfer function between a disturbance $d(s)$ and the output $y(s)$ has the following expression:

$$\frac{y(s)}{d(s)} = \frac{G(s)}{1 + R(s)G(s)} = \frac{Direct\ path}{1 + Open\ loop\ transfer\ function} \tag{67}$$

Given the block diagram at 23 the direct path of $G_x^{PD}(s)$ passes through $G_x(s)$, but only $G_\theta(s)$ has a feedback connection. This is the reason why only $G_\theta(s)$ is included in the denominator of the transfer function of $G_x^{PD}(s)$. At the same time, this shows that the position of the cart is not controlled, and this will be seen in the analysis of the different responses of the system. Subsequently, the expressions of $G_\theta^{PD}(s)$ and $G_x^{PD}(s)$ are as follows:

$$G_\theta^{PD}(s) = \frac{1}{M^2 + sk_D + k_P - (m+M)g} \qquad G_x^{PD}(s) = \frac{{}^2 - g}{s^2(M^2 + k_D s + k_P - (m+M)g} \tag{68}$$

To design the controller for the angle of the pendulum, $G_\theta^{PD}(s)$ will be used in the next point to tune the gains $k_P$ and $k_D$ in order to meet specific performance requirements in terms of time response and overshoot under a step disturbance.

## 4.2. Selection of PD Gains Based on Time-Domain Specifications

In this section, appropriate values for the PD controller gains are selected to satisfy given time-domain requirements. Specifically, the closed-loop response to a step disturbance must exhibit a peak time of less than 1 second and an overshoot of less than 20% after a step response.

These time-domain performance requirements can be related to the desired closed-loop pole locations using the standard second-order system approximation. The peak time and overshoot percentage of a second-order system are given by the following expressions:

$$T_{peak} = \frac{\pi}{\omega_d\sqrt{1-\xi^2}}, \qquad OS_\% = 100 \cdot e^{\left(-\frac{\xi\pi}{\sqrt{1-\xi^2}}\right)} \tag{69}$$

where $\xi$ is the damping ratio and $\omega_d$ is the damped natural frequency. From these expressions, it's possible to derive the values of $\xi$ and $\omega_n$ which satisfy the design requirements of the control system. In this particular case, the objective is to obtain:

- $T_{peak} < 1s$
- $OS_\% < 20\%$

### 4.2.1. Calculation of the desired $\xi$ and $\omega_n$

Given the design constraints of this project, it is possible to compute the values of $\xi$ and $\omega_n$ that satisfy the requirements under the following conditions:

$$T_{peak} = \frac{\pi}{\omega_d\sqrt{1-\xi^2}} < 1 \qquad OS_\% = 100 \cdot e^{\left(-\frac{\xi\pi}{\sqrt{1-\xi^2}}\right)} < 20 \tag{70}$$

which can be manipulated to obtain these expressions:

$$\omega_n > \frac{\pi}{\sqrt{1-\xi^2}} \qquad -\sqrt{\frac{\ln^2 20/100}{\pi^2 + \ln^2 20/100}} < \xi < \sqrt{\frac{\ln^2 20/100}{\pi^2 + \ln^2 20/100}} \tag{71}$$

Knowing that $\xi$ has to be positive in order to obtain stable damping oscillations, the expressions become:

$$\omega_n > \frac{\pi}{\sqrt{1-\xi^2}} \qquad 0 < \xi < \sqrt{\frac{\ln^2 20/100}{\pi^2 + \ln^2 20/100}} \tag{72}$$

which will result in these following values, which satisfy the design requirements of the controller:

$$\omega_n > 3.527\,\frac{rad}{s} \qquad 0 < \xi < 0.4559 \tag{73}$$

To minimize control energy, it is optimal to select values that are as close as possible to the satisfactory range. For the purposes of this design, the following values have been chosen:

$$T_{peak} = 0.99s \qquad OS_\% = 20\% \tag{74}$$

Which result in these parameters:

$$\omega_n = 3.529\,\frac{rad}{s} \qquad \xi = 0.4559 \tag{75}$$

### 4.2.2. Determination of $k_P$ and $k_D$

Given the expression of (68) and the values of the damping ratio $\xi$ and the natural frequency $\omega_n$, it's possible to obtain the values of $k_D$ and $k_P$. The characteristic equation of $G_\theta^{PD}(s)$ is its denominator, which is:

$$M^2 + k_D s + k_P - (m + M)g = 0 \tag{76}$$

It's important to point out that this expression is a second-order equation, which can be expressed as:

$$s^2 + 2\xi\omega_n s + \omega_n^2 = 0 \tag{77}$$

If these last two equations are put in a system, the following expression can be formed:

$$\begin{cases} Mls^2 + k_D s + k_P - (m + M)g = 0 \\ s^2 + 2\xi\omega_n s + \omega_n^2 = 0 \end{cases}$$

Which can be resolved to find the relationships between the gains $k_d$ and $k_P$ and the parameters $\xi$ and $\omega_n$, which result in the following expressions and values:

$$k_P = M\ell\omega_n^2 + (m + M)g = 58.415 \qquad k_D = 2M\ell\xi\omega_n = 7.242 \tag{78}$$

## 4.3. Nonlinear Closed-Loop Response of the PD-Controlled System to a Disturbance (Matlab®)

Using the gain values previously obtained, the nonlinear dynamics of the PD-controlled system are simulated in MATLAB®. The time responses of the cart position, pendulum angle, and control force are analyzed and discussed to assess the performance of the controller in a realistic nonlinear setting. The goal is to evaluate the closed-loop system response to an impulsive disturbance force applied to the cart. In order to analyze the system's behavior, two simulations have been made:

1. The first one with a step disturbance, to show that the response of the angle of the pendulum satisfies the design specifications
2. The second one with a specific pulse disturbance, with a force of 1 N and a duration of 0.1 s

The simulation is carried out over a time of 5 seconds, which is considered sufficient to capture the transient and steady-state behaviour.

### 4.3.1. Step Disturbance Response

The first simulation results are plotted in the following figure:

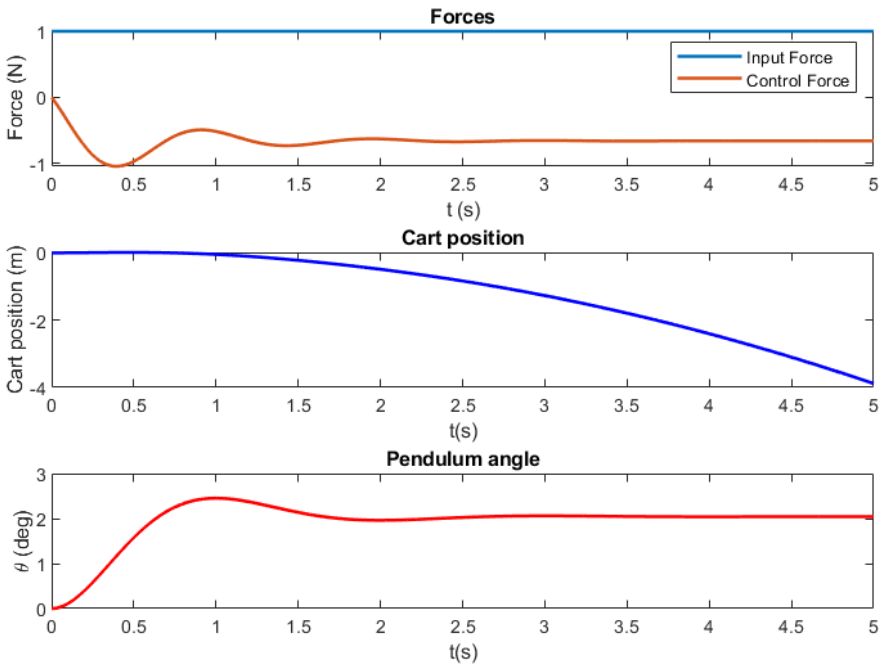


Figure 24: Response of cart-pendulum system after a step disturbance

When a step disturbance is applied, the control system is unable to return the pendulum's angle to its original position. In steady state, the angle settles at approximately 2.04ř. Nonetheless, the controller behaves as expected: the following table shows the $T_{peak}$ and the $OS_{\%}$ of the simulation:

| | **Expected** | **Actual** |
|---|---|---|
| $T_{peak}$ | 0.99s | 1.00s |
| $OS_{\%}$ | 20% | 19.9% |

Table 5: Comparison between design specifications and simulations results

At the same time, it's possible to notice that the cart is not stabilized by the controller and it keeps accelerating leftwards. This is happening because, given the constant disturbance, the controller needs to give a constant control force to the system, at steady state, to stabilize the pendulum. The control force can be expressed with the following transfer function:

$$\frac{u(s)}{d(s)} = \frac{-R_{PD}(s)G_{\theta}(s)}{1 + R_{PD}(s)G_{\theta}(s)} \tag{79}$$

Consequently, the acceleration is caused by the difference between the disturbance and the control force.

### 4.3.2. Pulse Disturbance Response

When the system is subjected to a 1 N pulse force lasting 0.1 s, such as from an impact on the cart or, in the case of an inverted pendulum modeled as a vertically landing rocket, a gust of wind, it behaves as follows:

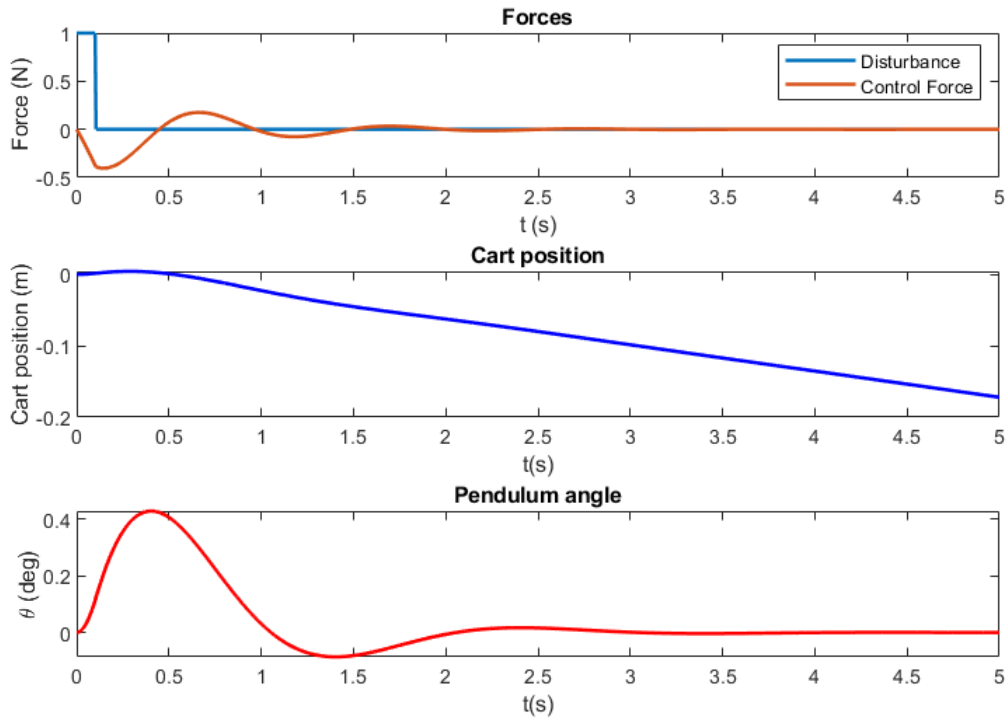


Figure 25: Response of cart-pendulum system after a pulse disturbance

In this case, the controller is able to stabilize the pendulum at its starting position, with some oscillations before stopping at its steady state. At the same time, the effect of the absence of control over the cart is still visible: the cart continues to move at almost constant speed after the perturbation. This is happening because the angle-stabilizing force moves the cart, but there is no force which puts the cart back to its initial position. The full state controller, which also controls the position of the cart, is designed and analyzed in Task 2.5. Overall, the PD-controlled system under the nonlinear model confirms the validity of the linear design, with acceptable performance under a realistic disturbance scenario. However, the cart is not controlled, and its behavior can be a limiting factor of this controller.

## 4.4. Nonlinear Closed-Loop Response of the PD-Controlled System to a Pulse Disturbance (Simulink®)

The nonlinear system simulation is repeated in Simulink®, using a block-based implementation of the PD-controlled inverted pendulum. The same disturbance scenario and controller gains as in the previous point are used.

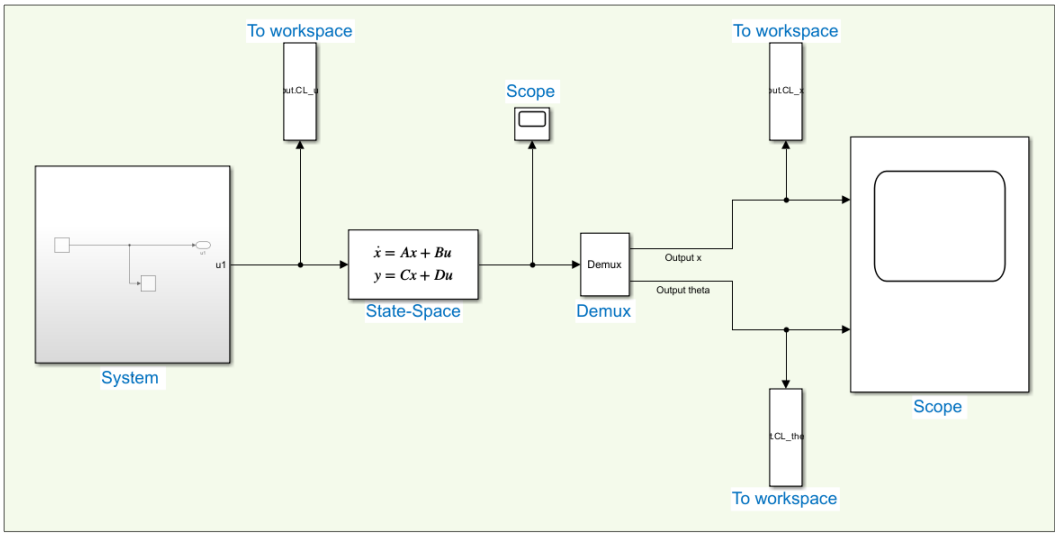


Figure 26: Block Diagram of the Simulink® Model

It includes a *step* block generating a 1 N pulse of 0.1 s duration, which acts as an external disturbance on the cart. The *State-Space* block contains the matrices related to the controller PD, where the nonlinear equations of motion are linearized around the upright equilibrium and expressed in state-space form with the matrices derived in point C. The output signal is then divided using the *Demux* block, and the response is then plotted on the following graph:

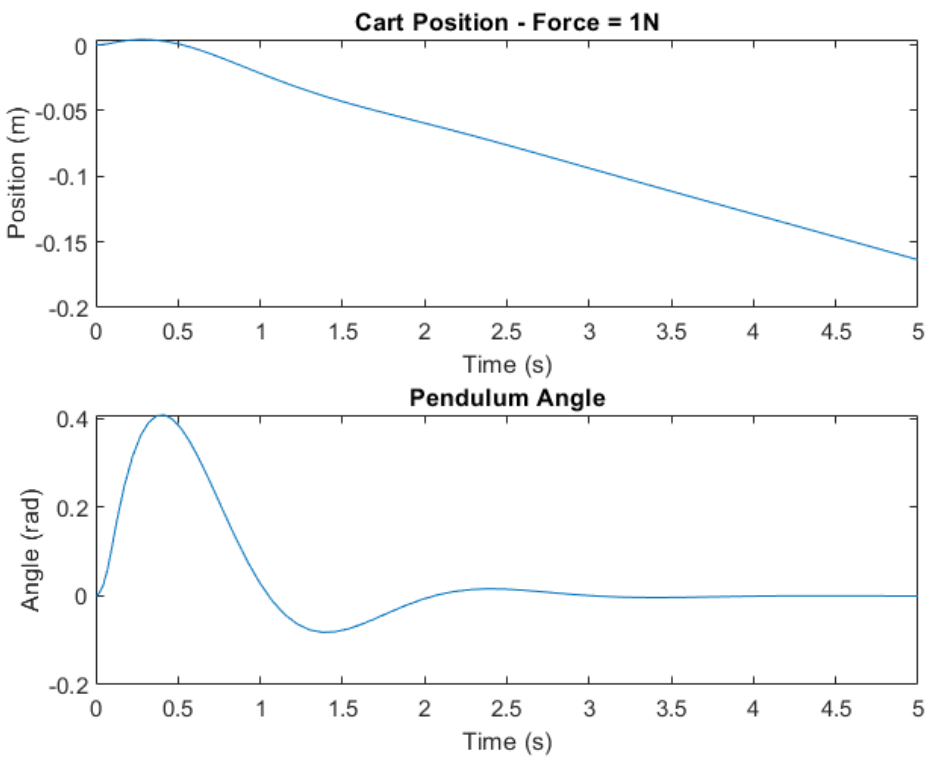


Figure 27: Simulink®

The poles were taken from the transfer function (68). Ideally, the first two poles, which represent the dynamics of the cart, should be null, because the cart's dynamics do not have any stability nor instability qualities. However, for the cart position it has been used 0 and $-10^{-3}$, since the *pulse* function requires that the two poles not be coincident.

# 5. Task 2.5: partial and full state feedback control

This task explores the application of state feedback techniques to the inverted pendulum system. Building upon the PD controller as designed above, the analysis first highlights its equivalence to a partial state feedback approach. Subsequently, the study is extended to a full state feedback control scheme, aiming to improve system performance and control authority through appropriate pole placement.

### 5.0.1. Limitations of the Partial State Feedback Controller

Although the PD controller can achieve stabilization and acceptable performance under certain conditions, it suffers from several limitations when implemented on a real system:

- The absence of feedback on cart position and velocity may lead to poor disturbance rejection and drift in the cart's position over time.
- The control law may require accurate and fast measurements of the angular velocity $\dot{\theta}$, which can be difficult to obtain in practice without introducing noise or delay.
- The lack of full state observability limits the ability to shape the full dynamics of the system, especially for performance-critical applications.
- If actuator constraints or saturation are present, the PD control strategy might produce unfeasible control forces, especially under large disturbances.

These limitations motivate the use of a full-state feedback strategy, which is considered in the following section.

## 5.1. Equations of the full state feedback controller

In this section, the Proportional-Derivative (PD) controller previously implemented is interpreted as a partial state feedback law. To compute the control action, it relies solely on a subset of the system states, the pendulum angle $\theta$ and its derivative $\dot{\theta}$ to compute the control action.

Given the full state vector of the system $x(t)$, and the feedback gain vector $G$, the general structure of a state feedback controller is determined as:

$$u(t) = -G\underline{x}(t) \tag{80}$$

Where the gain vector, in the case of the partial state feedback controller, analyzed in task 2.4, can be written as:

$$G = \begin{bmatrix} 0 & 0 & k_P & k_D \end{bmatrix} \tag{81}$$

Which can be expanded to find the formula of the control force, representing the stabilizing action of the controller, which has the following expression :

$$u(t) = k_P\theta(t) + k_D\dot{\theta}(t) \tag{82}$$

This expression shows that the control law does not involve the cart position $x$ or its velocity $\dot{x}$, and is therefore equivalent to a partial state feedback. The expression of a full state feedback controller is as follows:

$$u(t) = G\underline{x}(t) = k_{P,x}x(t) + k_{D,x}\dot{x}(t) + k_{P,\theta}\theta(t) + k_{D,\theta}\dot{\theta}(t) \tag{83}$$

Where the gain vector, for the full state feedback controller, is expressed as:

$$G = \begin{bmatrix} k_{P,x} & k_{D,x} & k_{P,\theta} & k_{D,\theta} \end{bmatrix} \tag{84}$$

Given the state-space matrices A, B, C, and D listed in task 1.4, it's possible to represent the state-space equations, with the disturbance, with these equations:

$$\begin{cases} \dot{x}(t) = Ax(t) + B_U u(t) + B_D d(t) \\ y(t) = Cx(t) + D_U u(t) + D_D d(t) \end{cases}$$

Given the expression of $u(t)$ 82, and the fact that $D_U = D_D = 0$, it's possible to manipulate the state space equations as follows:

$$\begin{cases} sx(s) = (A + B_U G)x(s) + B_D d(s) \\ y(s) = Cx(s) \end{cases}$$

Where $A + B_D G$ can be expressed as $A_C$, the control matrix. Subsequently, the transfer function, in Laplace's domain, between $y(s)$ and $d(s)$ can be formulated as follows:

$$\frac{y(s)}{d(s)} = C(sI - A_C)^{-1} B_D \tag{85}$$

From this equation, it's possible to use some Matlab®) tools to manipulate the position of the poles of the system in order to control the angle of the pendulum and the position of the cart.

## 5.2. Implementation of the Full State PD Controller in Matlab®

In order to design the pendulum controller, with the same design specifications for the partial state feedback controller explained in task 2.4, these decisions have been made:

- The gains for the control of the angle of the pendulum, $k_{P,\theta}$ and $k_{D,\theta}$ have been retained
- The gains for the control of the position of the cart,$k_{P,x}$ and $k_{D,x}$ are assumed to be equal to $k_{P,\theta}$ and $k_{D,\theta}$

**NOTE**: The characteristic equation of the closed-loop transfer function is a fourth-order expression, and the precise values of $k_{P,x}$ and $k_{D,x}$ are challenging to compute. In order to simplify the design process of the controller, it has been decided to keep the same gain values for $x(s)$ as for $\theta(s)$, despite a potential reduction in control performance.

### 5.2.1. Pole selection

Subsequently, using the **place** Matlab® function, it was possible to place the poles in a specific position. For the design of this full state controller, these poles have been selected:

| Pole | Value |
|---|---|
| Pole 1 | $-3$ |
| Pole 2 | $-4$ |
| Pole 3 | $-1.6094 + 3.1416i$ |
| Pole 4 | $-1.6094 - 3.1416i$ |

Table 6: Poles of the full state feedback controller

The first two poles represent the dynamics of the cart, while the last two poles characterize the movement of the pendulum. The choice of the poles of the cart was driven by the necessity to:

- Make the cart dynamics decay rapidly over time, which limits the ability of the cart to affect the angle of the pendulum
- Use the least amount of control energy , which means that the poles must not be excessively negative

### 5.2.2. Pulse Disturbance Response and comparison with partial state feedback controller

After a pulse disturbance with a force of 1 N lasting 0.1 s, the response of the full state controller is as follows:

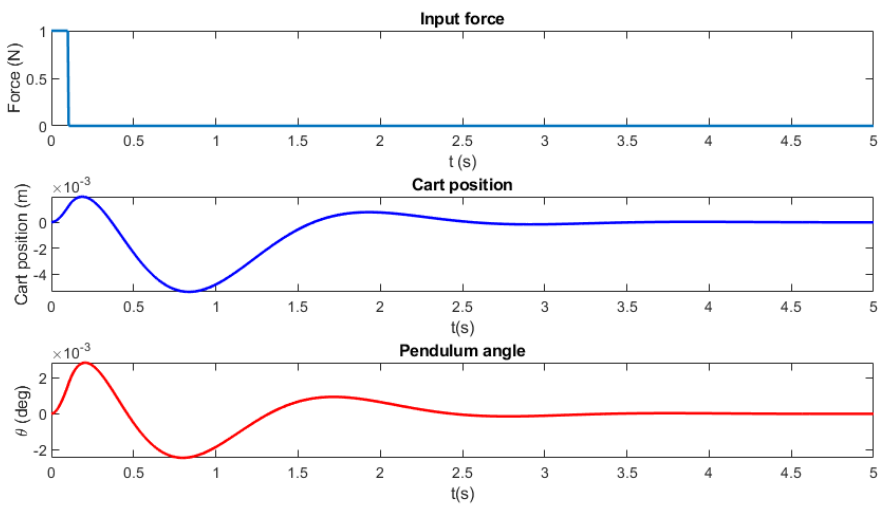


Figure 28: Response of the cart-pendulum system, after a pulse disturbance, with a full state PD controller

The differences between the full state and the partial state controllers are substantial. In particular:

- The full state controller has the ability to control the position of the cart, while the partial state does not
- The peak angle obtained from the full state controller is much smaller compared to the partial state one. This means that the control of the cart helps the control of the angle of the pendulum

In summary, a full-state controller offers better performance and is more applicable to real-world scenarios compared to a partial-state controller. For example, a real inverted pendulum does not have infinite space to move. A control over the position of the cart is necessary in order to stabilize an inverted pendulum in the real world.

# References


[1] M. Dal Nevo. “Controllo classico di un pendolo inverso”. Tesi di Laurea Magistrale. Università degli Studi di Padova, 2022 (cit. on p. 3).

[2] *Starship Booster Return on Final Approach (54063904149).jpg*. 2024. URL: https://commons.wikimedia.org/wiki/File:Starship_Booster_Return_on_Final_Approach_(54063904149).jpg (cit. on p. 3).

[3] D. Cline. *Rayleighs Dissipation Function*. unknown. URL: https://phys.libretexts.org/Bookshelves/Classical_Mechanics/Variational_Principles_in_Classical_Mechanics_(Cline)/10%3A_Nonconservative_Systems/10.04%3A_Rayleighs_Dissipation_Function (cit. on p. 5).

[4] D. di Automatica e Informatica del Politecnico di Torino. *Equilibrio e stabilità di sistemi dinamici*. URL: https://www.ladispe.polito.it/corsi/ContrAutoInf270/material/Linearizzazione.pdf (cit. on p. 12).

[5] P. Rocco. *Funzione di trasferimento*. 2003. URL: https://rocco.faculty.polimi.it/leonardo/lez3.pdf (cit. on p. 14).

[6] P. R. Paolo. *Fondamenti di automatica. Capitolo 3: Sistemi dinamici nel dominio delle trasformate*. Lecture from the course "Fondamenti di automatica (per aerospaziali)", Politecnico di Milano. 2020 (cit. on p. 15).

[7] P. R. Paolo. *Fondamenti di automatica. Capitolo 6:Risposta in frequenza*. Lecture from the course "Fondamenti di automatica (per aerospaziali)", Politecnico di Milano. 2020 (cit. on p. 16).

[8] P. R. Paolo. *Fondamenti di automatica. Capitolo 15: Luogo delle radici*. Lecture from the course "Fondamenti di automatica (per aerospaziali)", Politecnico di Milano. 2020 (cit. on p. 25).

[9] P. R. Paolo. *Fondamenti di automatica. Capitolo 12: Progetto del controllore*. Lecture from the course "Fondamenti di automatica (per aerospaziali)", Politecnico di Milano. 2020 (cit. on p. 26).