Thermionic Deluxe

Revision 05.19.19

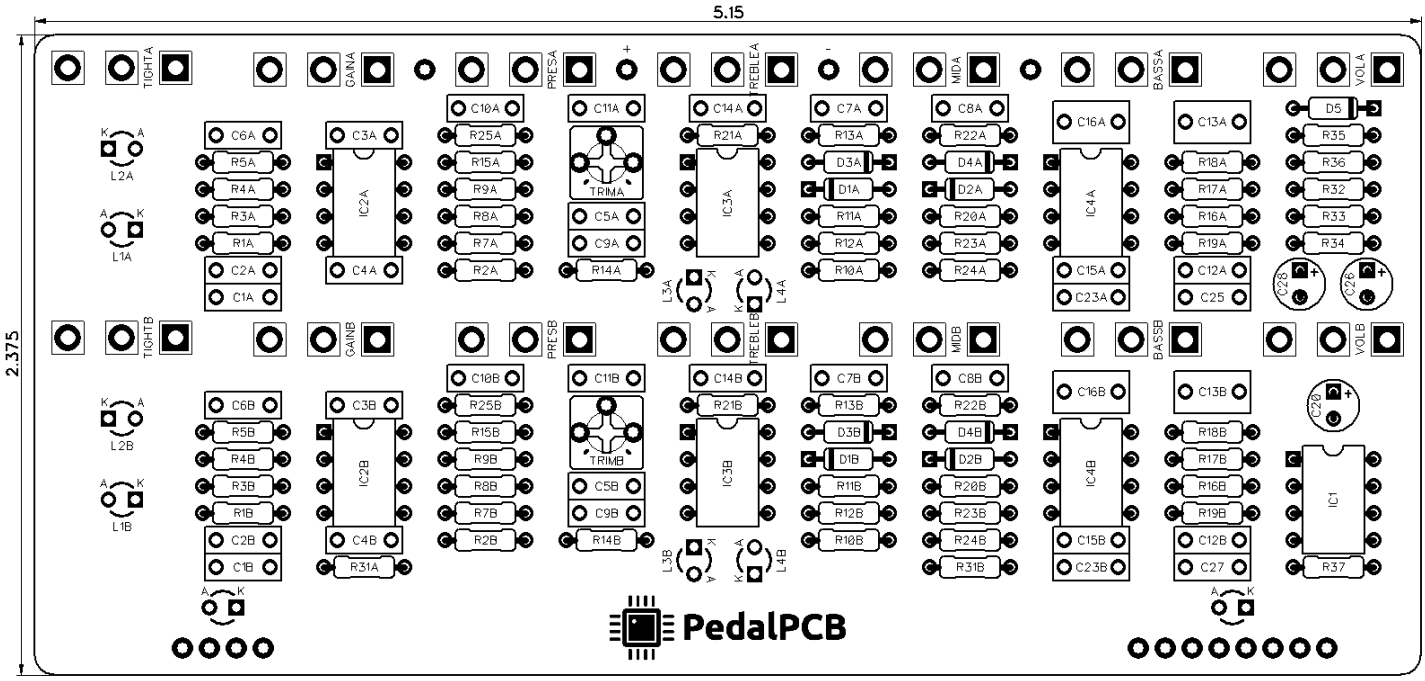

Channel A

- **Volume**
- **Bass**
- **Mid**
- **Treble**
- **Presence**
- **Gain**
- **Tight**

Channel B

- **Volume**
- **Bass**
- **Mid**
- **Treble**
- **Presence**
- **Gain**
- **Tight**

Footswitches

- **Active/Bypass**
- **Channel A/B**

All trademarks and registered trademarks are the property of their respective owners. The company, product, and service names used in this web site are for identification purposes only. Use of these names, logos, and brands does not imply endorsement.

Copyright © 2019 - PedalPCB.com

PedalPCB

Thermionic Deluxe

Parts List

RESISTORS (1/4W)

R1A	1M	R1B	1M
R2A	330K	R2B	330K
R3A	10K	R3B	10K
R4A	22K	R4B	22K
R5A	39K	R5B	39K
R7A	10K	R7B	10K
R8A	22K	R8B	22K
R9A	22K	R9B	22K
R10A	22K	R10B	22K
R11A	22K	R11B	22K
R12A	220K	R12B	220K
R13A	10K	R13B	27K
R14A	10K	R14B	10K
R15A	2K2	R15B	2K2
R16A	33K	R16B	33K
R17A	33K	R17B	33K
R18A	2K2	R18B	2K2
R19A	470K	R19B	470K
R20A	2K2	R20B	2K2
R21A	22K	R21B	22K
R22A	2K2	R22B	2K2
R23A	100K	R23B	100K
R24A	3K3	R24B	3K3
R25A	4K7	R25B	4K7
R31A	10K	R31B	10K
R32	20K		
R33	22K		
R34	2K2		
R35	20K		
R36	22K		
R37	2K2		

CAPACITORS

C1A	22n	C1B	22n
C2A	47p	C2B	47p
C3A	10n	C3B	10n
C4A	1n	C4B	1n
C5A	100n	C5B	100n
C6A	47p	C6B	47p
C7A	47n	C7B	47n
C8A	120p	C8B	120p
C9A	100p	C9B	220p
C10A	10n	C10B	10n
C11A	4n7	C11B	4n7
C12A	22n	C12B	22n
C13A	220n	C13B	220n
C14A	10n	C14B	10n
C15A	2n2	C15B	2n2
C16A	220n	C16B	220n
C23A	100n	C23B	100n
C20	100u		
C25	100n		
C26	22u		
C27	100n		
C28	22u		

INTEGRATED CIRCUITS

IC1	TL072
IC2A	TL072
IC2B	TL072
IC3A	TL072
IC3B	TL072
IC4A	TL072
IC4B	TL072

DIODES

D1A	1N4148
D1B	1N4148
D2A	1N4148
D2B	1N4148
D3A	1N4148
D3B	1N4148
D4A	1N4148
D4B	1N4148
D5	1N5817

LEDS

L1A	3mm Red LED
L1B	3mm Red LED
L2A	3mm Red LED
L2B	3mm Red LED
L3A	3mm Red LED
L3B	3mm Red LED
L4A	3mm Red LED
L4B	3mm Red LED
LEDA	3mm Red LED
LEDB	3mm Red LED

POTENTIOMETERS

VOLA	A50K
TREBLEA	B100K
BASSA	C100K
MIDA	C100K
PRESA	C10K
TIGHTA	C100K
GAINA	B1M
VOLB	A50K
TREBLEB	B100K
BASSB	C100K
MIDB	C100K
PRESB	C10K
TIGHTB	C100K
GAINB	A1M

TRIM POTS

TRIMA	100K TRIM (3362P)
TRIMB	100K TRIM (3362P)

Common offboard components (enclosure, footswitch, jacks, etc) are not listed

Copyright © 2019 - PedalPCB.com

PedalPCB

Thermionic Deluxe

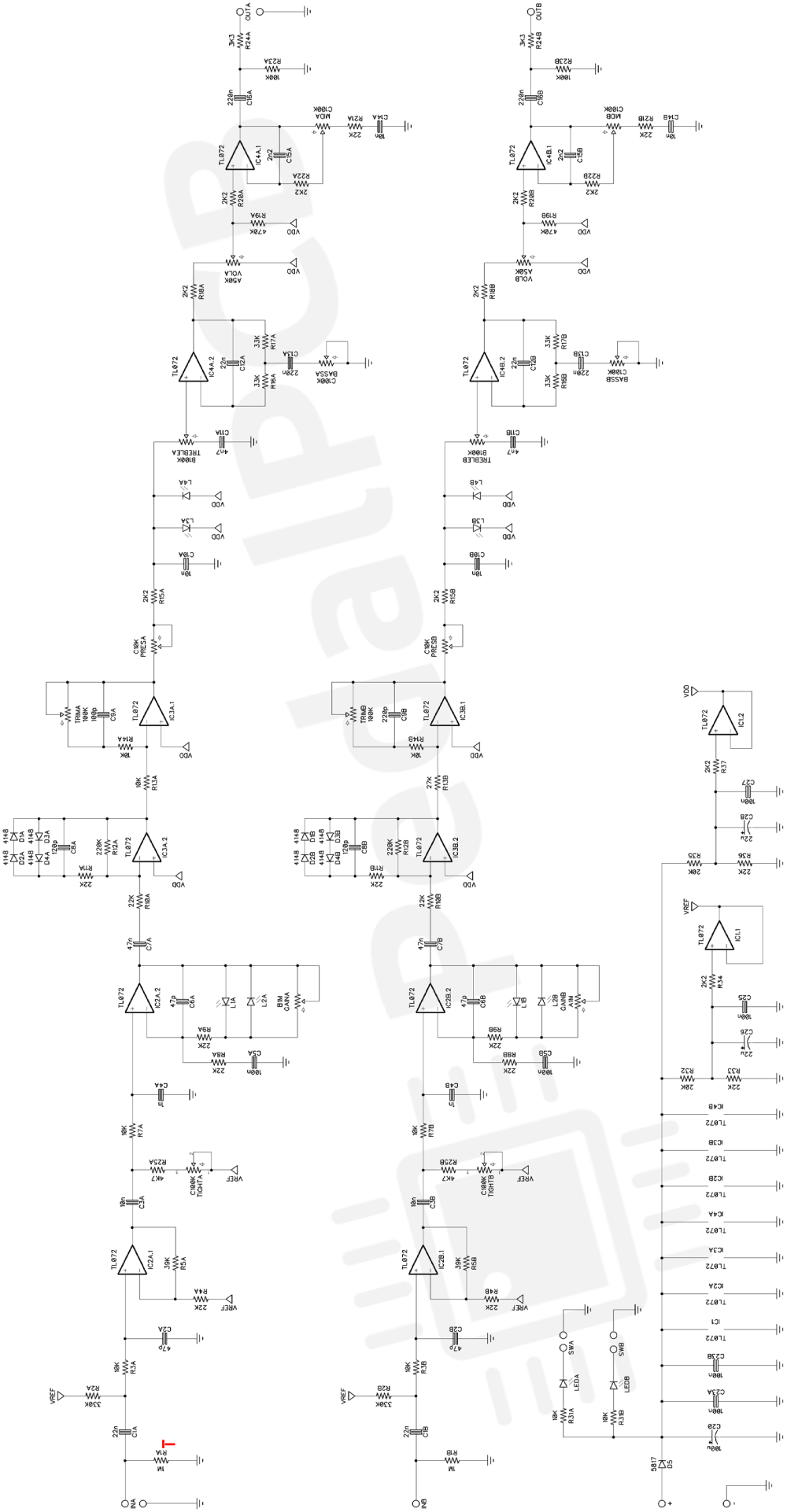

Copyright © 2019 - PedalPCB.com

PedalPCB

Thermionic Deluxe

Wiring Diagram

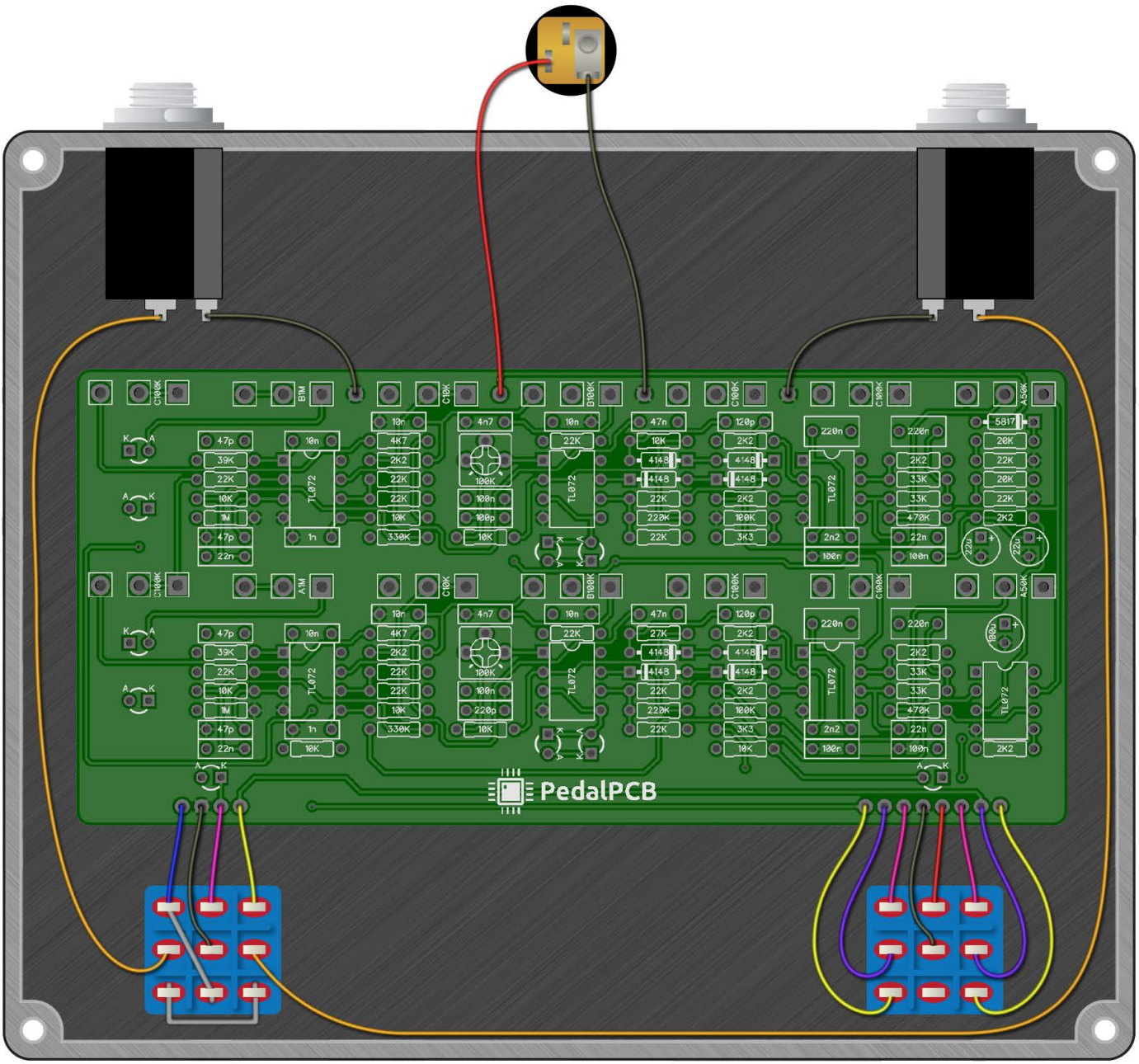

Copyright © 2019 - PedalPCB.com

Thermionic Deluxe

Drill Template
4S6500 / 1590XX Enclosure

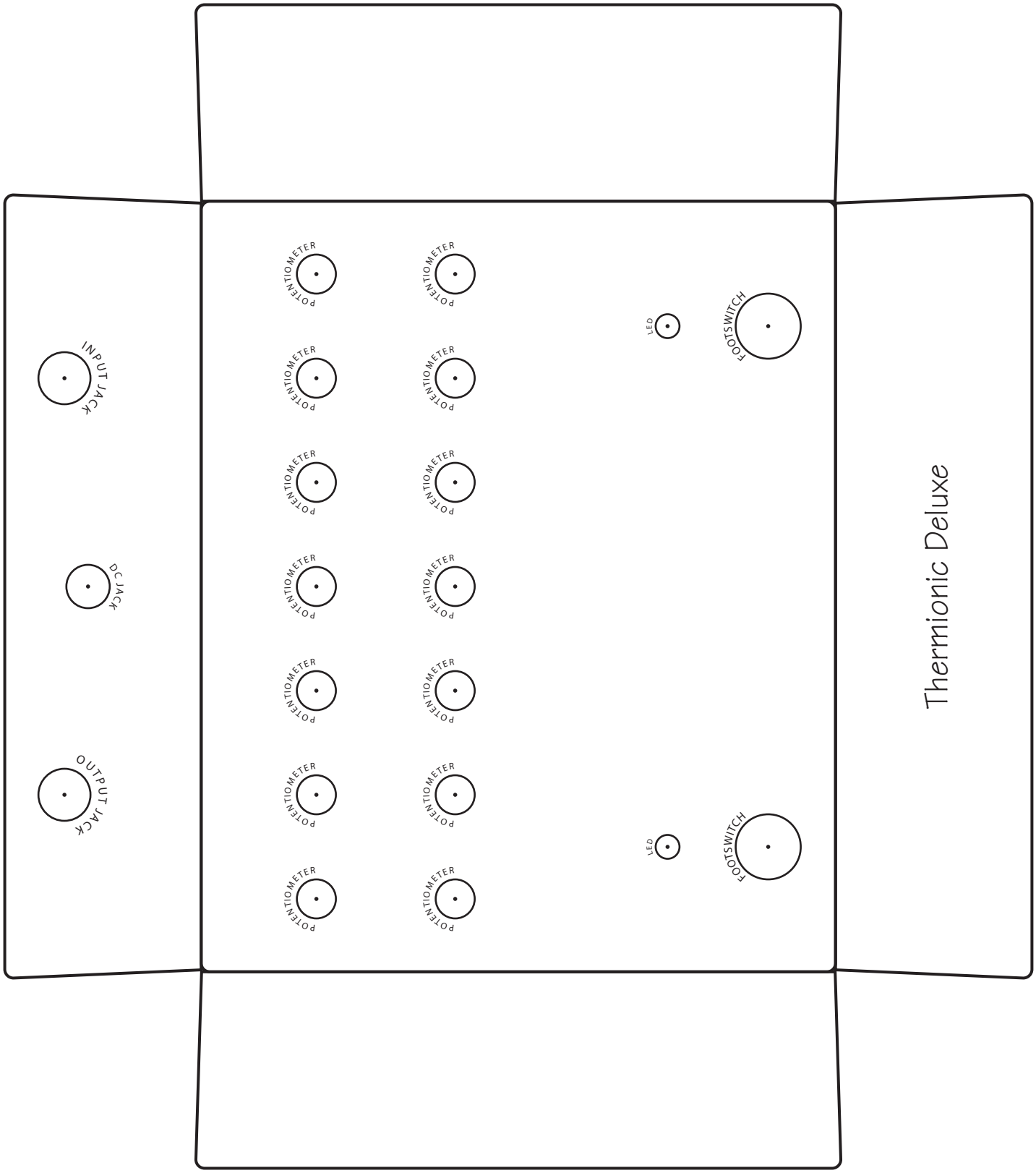

Copyright © 2019 - PedalPCB.com