Apple 2 Computer Technical Information

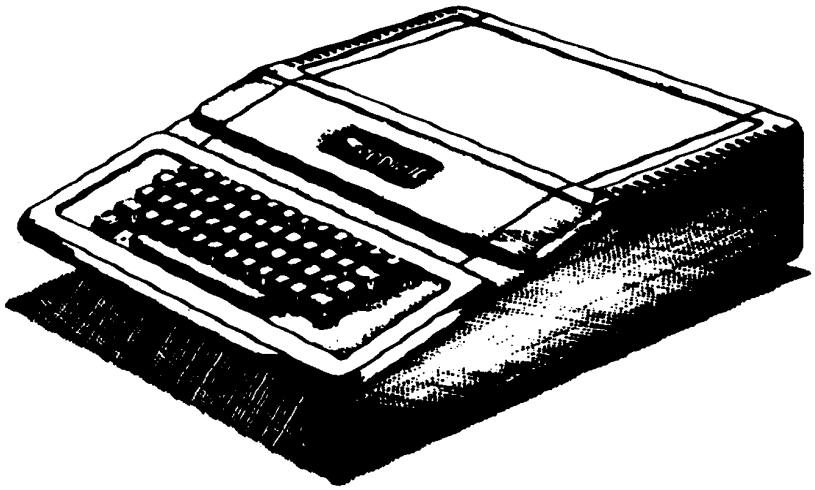

Apple][Computer Family Information

Schematic : Apple 2e Computer (Euro)
050-0054-A 6/82

Apple Service Level 2 Technical Reference #204-1011 vol. 2

Document # 533

Ex Libris David T. Craig

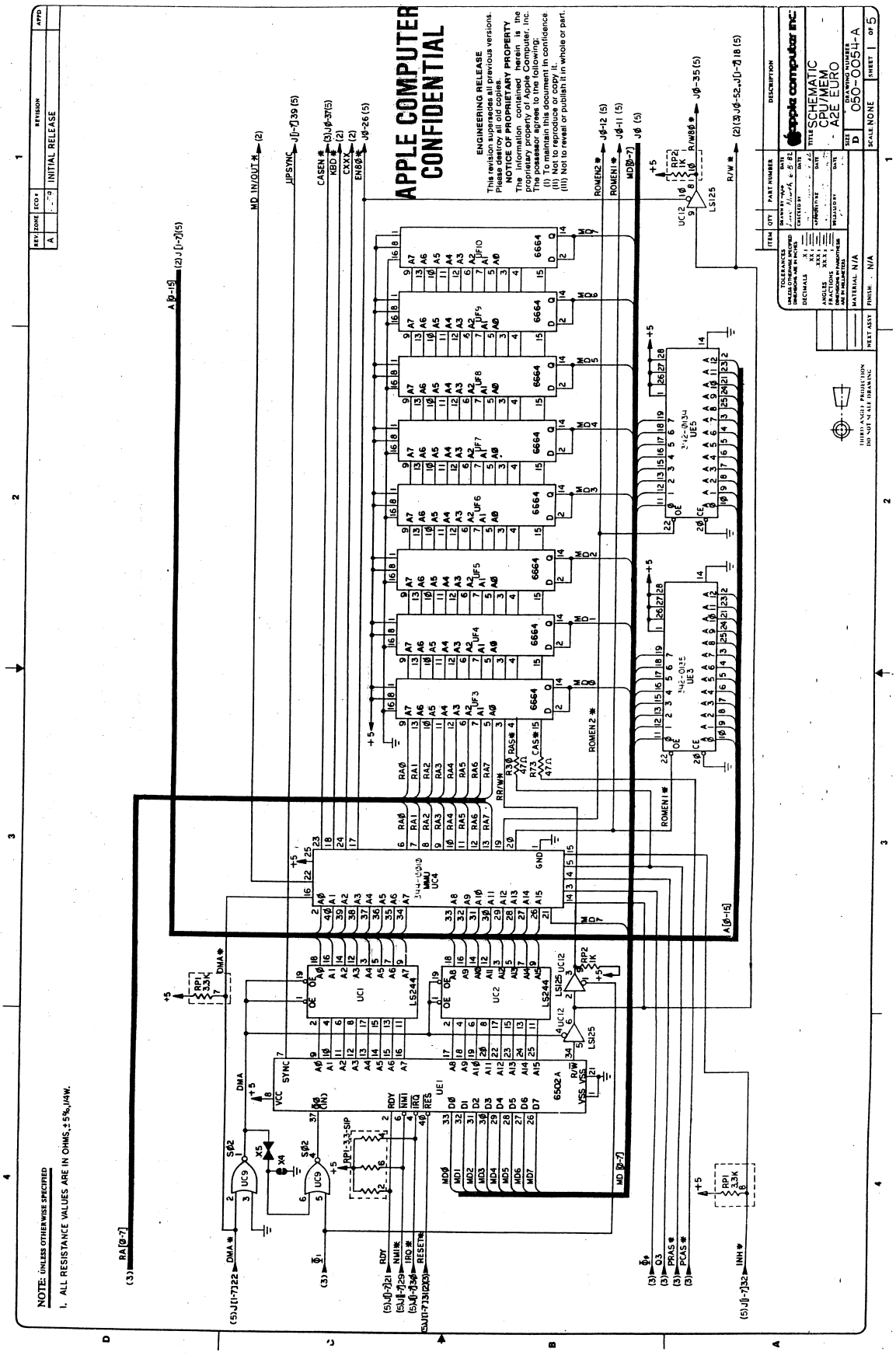
APPLE COMPUTER
CONFIDENTIAL
ENGINEERING RELEASE
This revision supersedes all previous versions.
Please destroy all old copies.
NOTICE OF PROPRIETARY PROPERTY
The information contained herein is the proprietary property of Apple Computer, Inc.
The possessor agrees to the following:
(I) To maintain this document in confidence.
(II) Not to reproduce or copy it.
(III) Not to reveal or publish it in whole or part.
REV ZONE ECO# REVISION APPD
A INITIAL RELEASE
NOTE: UNLESS OTHERWISE SPECIFIED
1. ALL RESISTANCE VALUES ARE IN OHMS, ±5%, 1/4W.
apple computer inc
SCHEMATIC
CPU/MEM
A2E EURO
050-0054-A
SCALE NONE
SHEET 1 OF 5
THIRD ANGLE PROJECTION
DO NOT SCALE DRAWING

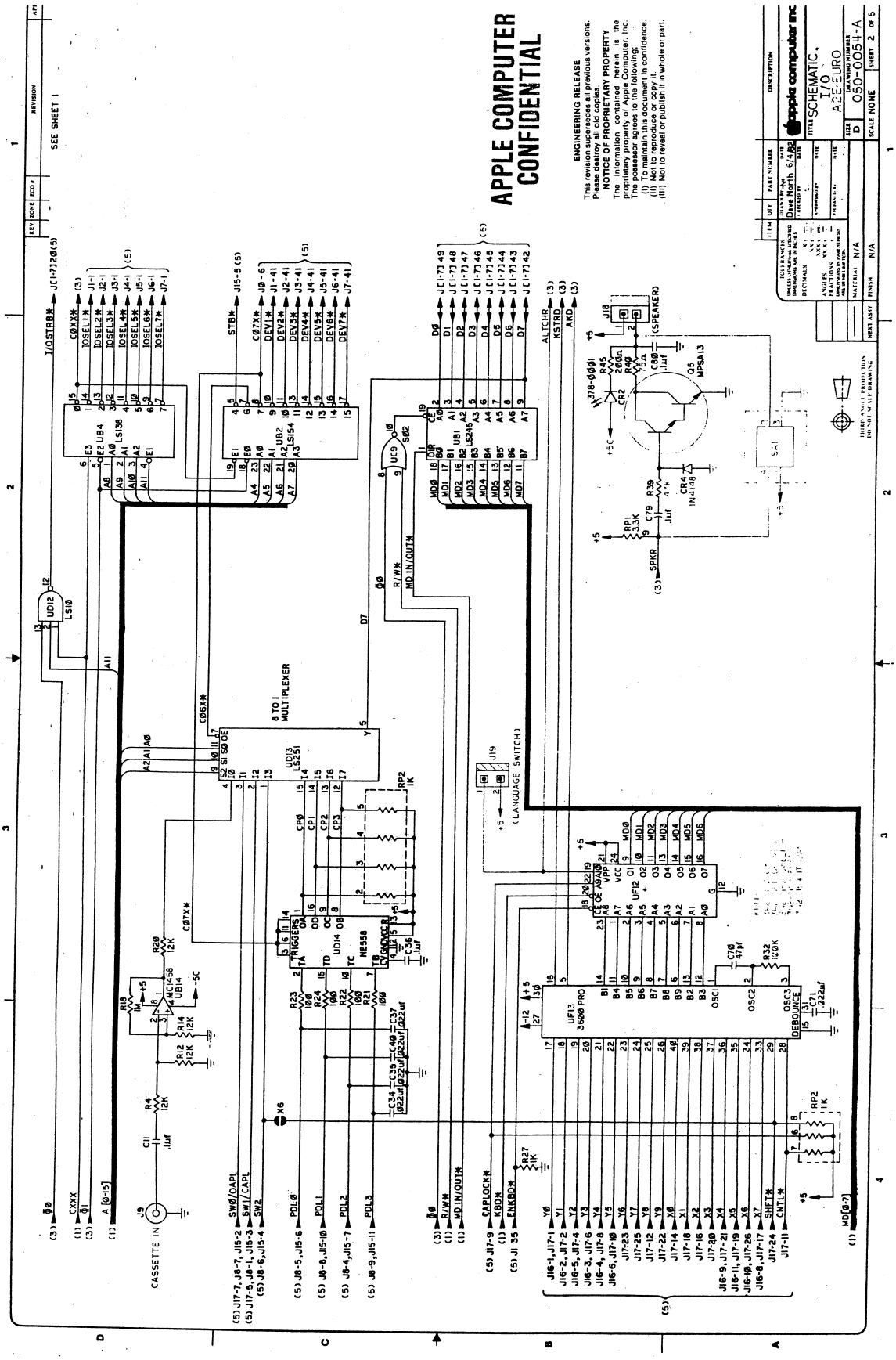
APPLE COMPUTER
CONFIDENTIAL
ENGINEERING RELEASE
This revision supersedes all previous versions.
Please destroy all old copies.
NOTICE OF PROPRIETARY PROPERTY
The information contained herein is the proprietary property of Apple Computer, Inc. The possessor agrees to the following:
(I) To maintain this document in confidence.
(II) Not to reproduce or copy it.
(III) Not to reveal or publish it in whole or part.
SEE SHEET 1
8 TO 1 MULTIPLEXER
CASSETTE IN
(LANGUAGE SWITCH)
(SPEAKER)
apple computer inc
SCHEMATIC, I/O
A2E-EURO
050-0054-A
SCALE NONE
SHEET 2 OF 5

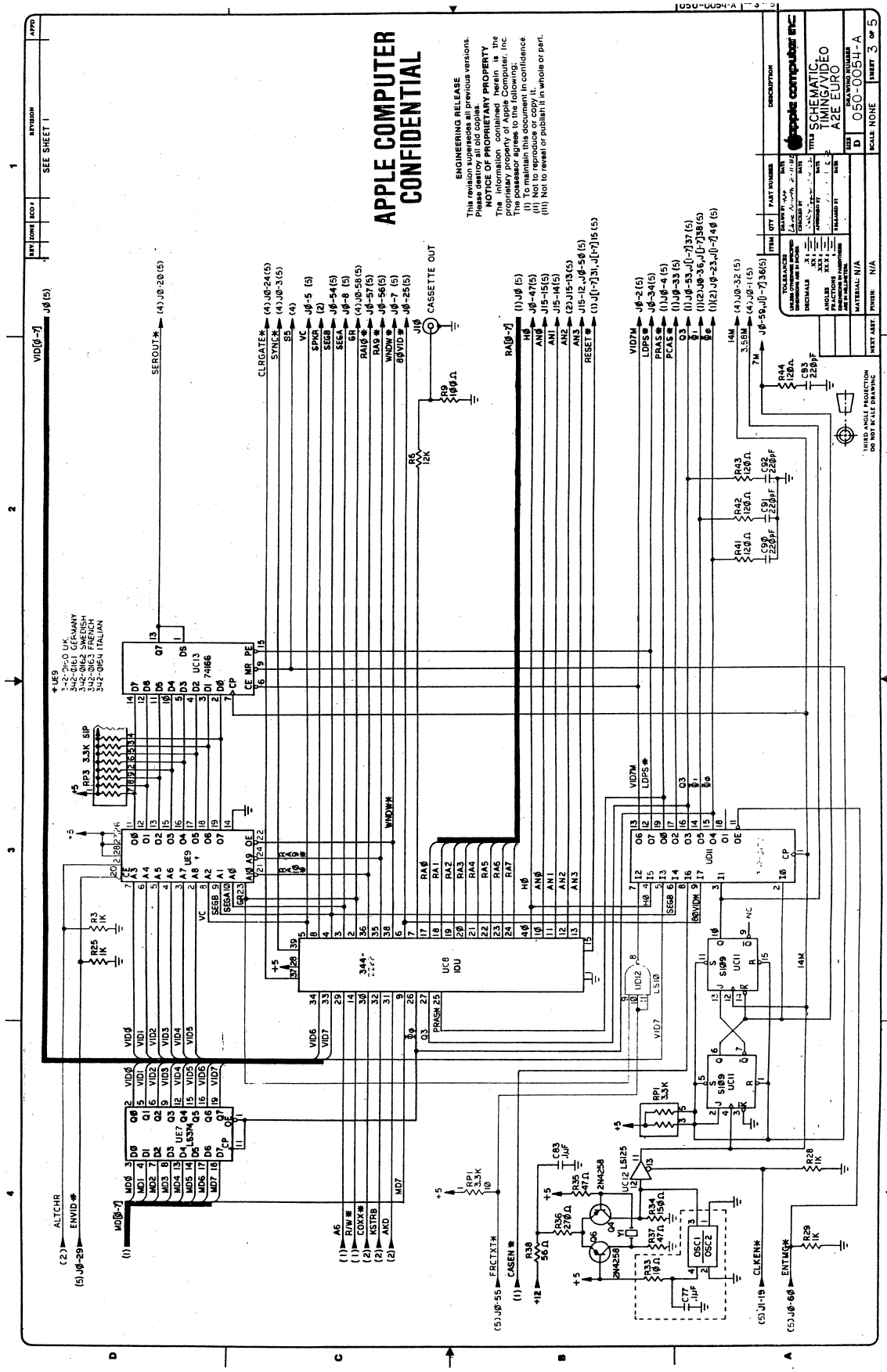
APPLE COMPUTER
CONFIDENTIAL
ENGINEERING RELEASE
This revision supersedes all previous versions.
Please destroy all old copies.
NOTICE OF PROPRIETARY PROPERTY
The information contained herein is the proprietary property of Apple Computer, Inc.
The possessor agrees to the following:
(i) To maintain this document in confidence.
(ii) Not to reproduce or copy it.
(iii) Not to reveal or publish it in whole or part.
SCHEMATIC, TIMING/VIDEO
A2E EURO
050-0054-A
SHEET 3 OF 5
SCALE: NONE
THIRD ANGLE PROJECTION
DO NOT SCALE DRAWING
CASSETTE OUT
SEE SHEET 1

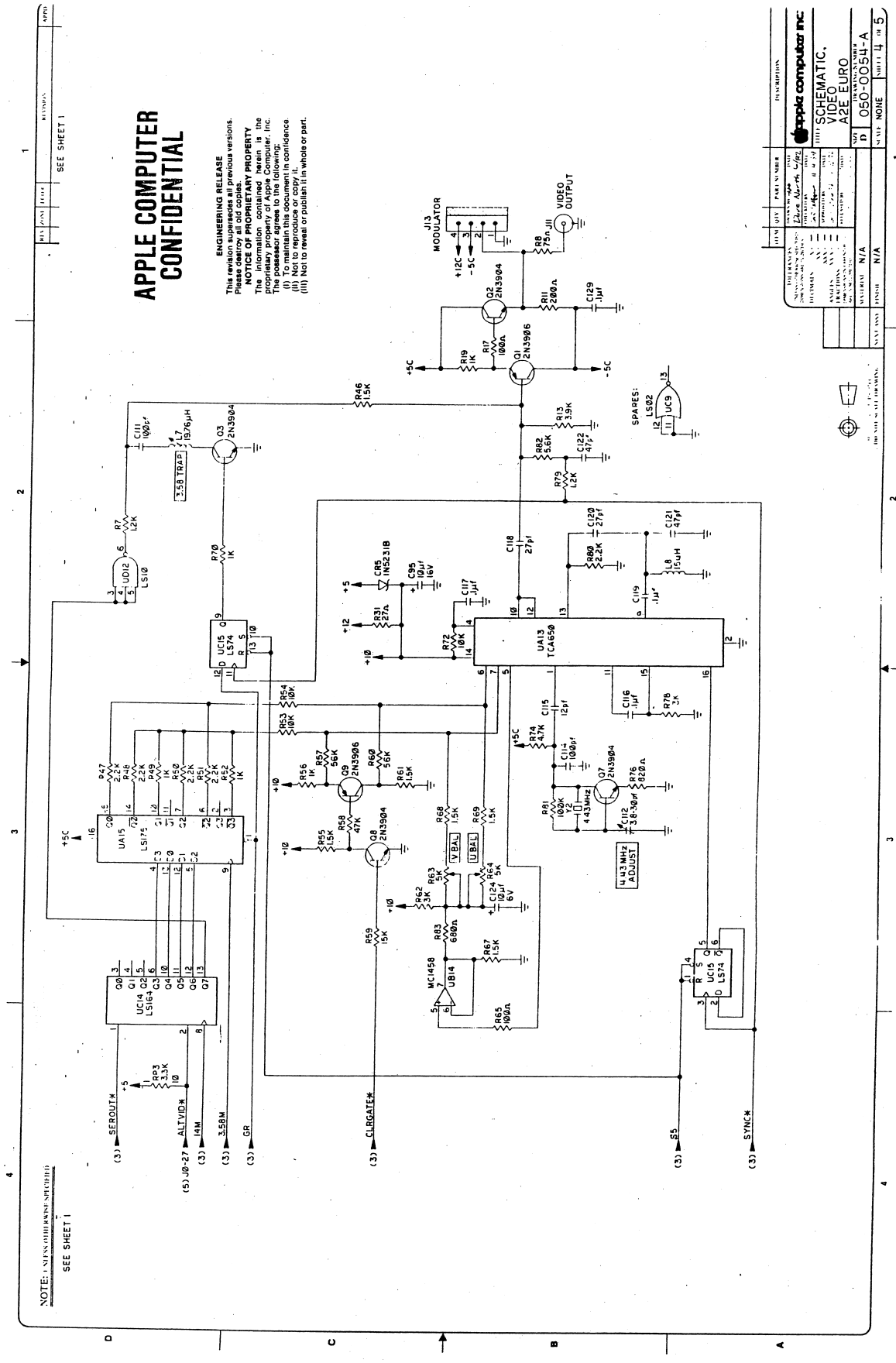
APPLE COMPUTER
CONFIDENTIAL
ENGINEERING RELEASE
This revision supersedes all previous versions.
Please destroy all old copies.
NOTICE OF PROPRIETARY PROPERTY
The information contained herein is the property of Apple Computer, Inc.
The possessor agrees to the following:
(I). To maintain this document in confidence.
(II) Not to reproduce or copy it.
(III) Not to reveal or publish it in whole or part.
apple computer inc
TITLE SCHEMATIC, VIDEO A2E EURO
DRAWING NUMBER 050-0054-A
SIZE D
SCALE NONE
SHEET 4 OF 5
SEE SHEET 1
NOTE: UNLESS OTHERWISE SPECIFIED
J13 MODULATOR
VIDEO OUTPUT
SPARES:
3.58 TRAP
4.43MHz ADJUST
SEROUT*
ALTVID*
14M
3.58M
GR
CLRGATE*
SYNC*

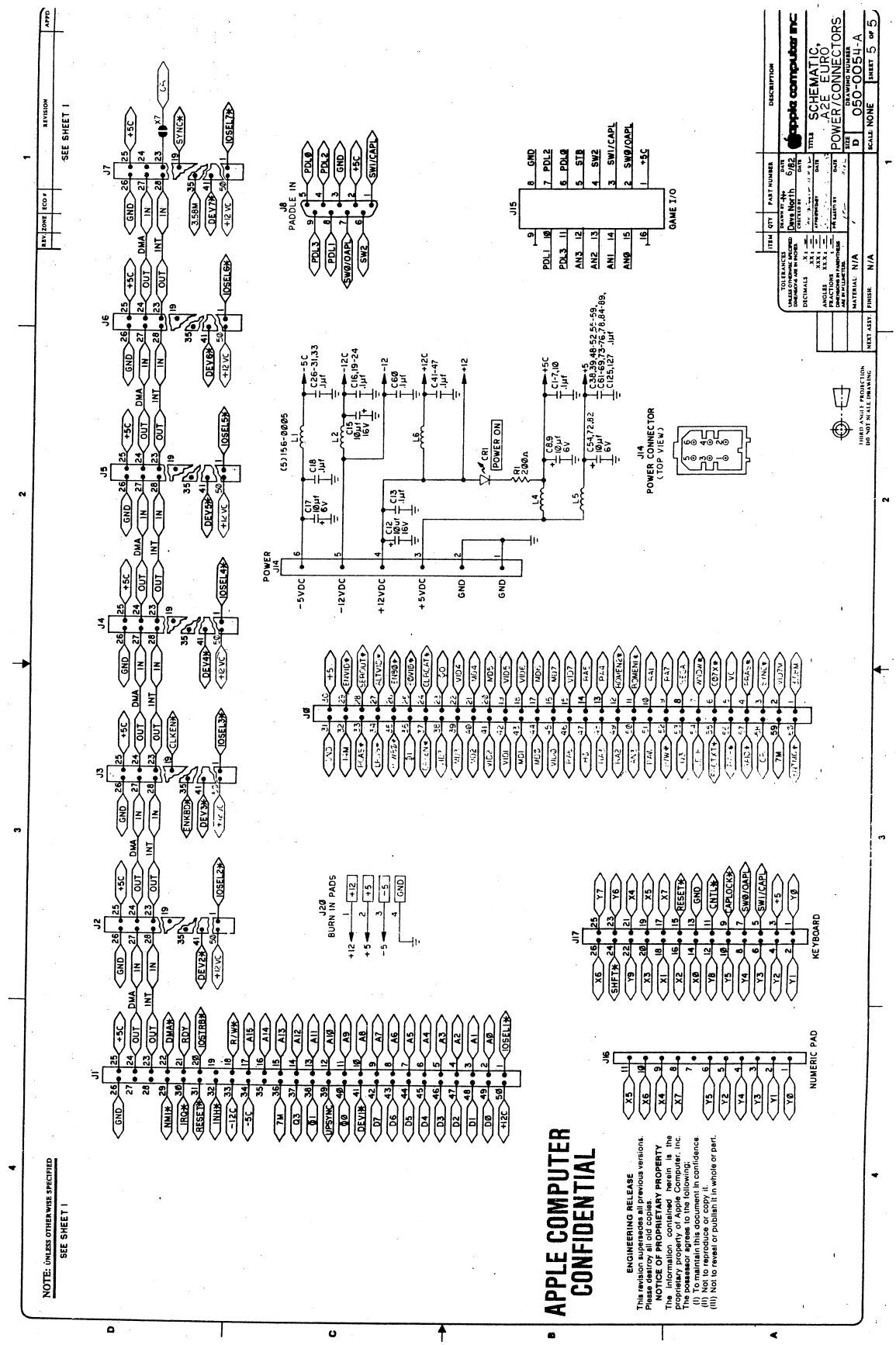
APPLE COMPUTER CONFIDENTIAL
ENGINEERING RELEASE
This revision supersedes all previous versions. Please destroy all old copies.
NOTICE OF PROPRIETARY PROPERTY
The information contained herein is the proprietary property of Apple Computer, Inc. The possessor agrees to the following:
(I) To maintain this document in confidence.
(II) Not to reproduce or copy it.
(III) Not to reveal or publish it in whole or part.
NOTE: UNLESS OTHERWISE SPECIFIED
SEE SHEET 1
J1
J2
J3
J4
J5
J6
J7
J8
PADDLE IN
J15
GAME I/O
J14
POWER CONNECTOR (TOP VIEW)
J20
BURN IN PADS
J17
KEYBOARD
J16
NUMERIC PAD
POWER
J14
-5VDC
-12VDC
+12VDC
+5VDC
GND
GND
POWER ON
CR1
apple computer inc
SCHEMATIC, A2E EURO POWER/CONNECTORS
050-0054-A
SCALE NONE
SHEET 5 OF 5
Dave North
6/82
MATERIAL N/A
FINISH N/A
NEXT ASSY.
THIRD ANGLE PROJECTION
DO NOT SCALE DRAWING