No. ARTICLE	Part number	Supplier	DESCRIPTION	QTY
1	1658621-9	Molex	Connector	2
2	289-9975	RS pro	flat ribbon cable	1

All cables are PTFE cables

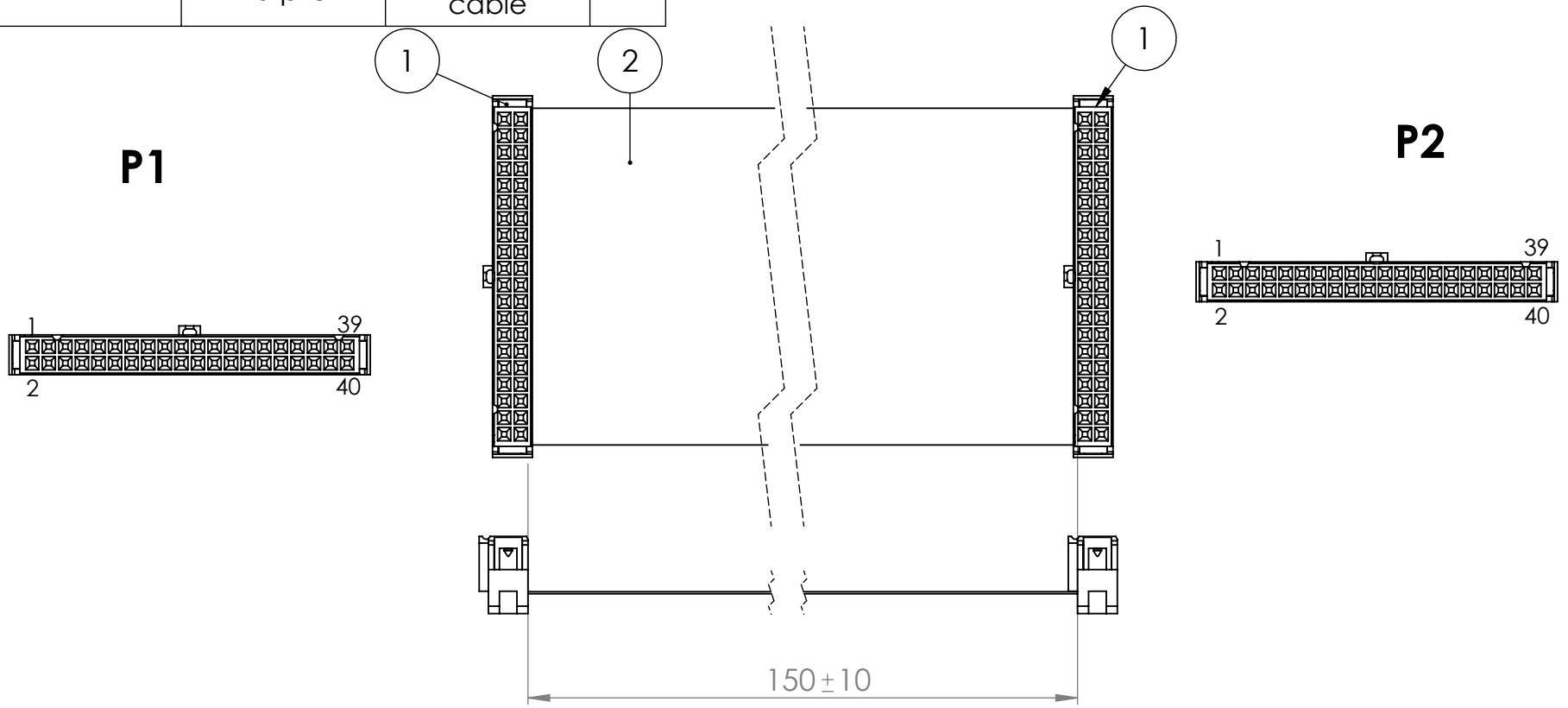

To	From
P1	P2
1	1
2	2
3	3
4	4
5	5
6	6
7	7
8	8
9	9
...	...
40	40

Project: RuggedPOD

horizon by Splitted-Desktop Systems

	NAME	DATE
DRAWN	JJ Chanut	03/03/2016

DO NOT SCALE DRAWING | REVISION A

UNLESS OTHERWISE SPECIFIED:
DIMENSIONS ARE IN MILLIMETERS
SURFACE FINISH:
TOLERANCES:
LINEAR:
ANGULAR:

MATERIAL: Follow BOM

WEIGHT:

TITLE: raspberry_to_backplane

Part number: 5-013R-014R-015

A4

SCALE:1:1

SHEET 1 OF 1