DOI 10.5281/zenodo.19197914 visitors 8

A Python Toolkit for Reference Evapotranspiration (ET_o) Calculation Directly from Pandas DataFrames

This repository provides a standardized Python implementation for estimating reference evapotranspiration (ET_o) using two primary methodologies: the ASCE Penman-Monteith (PM) model—supporting both daily and hourly temporal resolutions—and the Hargreaves-Samani empirical equation. Designed for seamless integration with user-provided Pandas DataFrames, the toolkit can be used based on the meteorological data from traditional weather stations or high-frequency observations derived from eddy-covariance flux towers.

This documentation is structured into two main sections:

- **Functional Guide:** A practical overview of how to import, call, and implement the core functions for ET_o calculation within your research workflow.
- **Theoretical Framework:** A detailed technical reference covering the underlying physical formulas, coefficient derivations, required inputs, etc. for each supported method.

How To Use This Repository?

Repository installation

```
pip install "git+https://github.com/RuiGao9/pyETo.git"
```

Import functions

The `examples/eto_playground.ipynb` notebook provides a comprehensive implementation of reference evapotranspiration (ET_o) estimation. It demonstrates workflows for the ASCE Penman-Monteith method (at both daily and hourly resolutions) and the Hargreaves-Samani empirical model.
To get started, initialize the environment by importing the core modules:

```
import pandas as pd
import numpy as np
import matplotlib.pyplot as plt

import py_eto
from py_eto import helpers
from py_eto.helpers import calc_es_ea, calc_gamma, calc_pressure, ca
```

Daily PM-ETo

Preparing a dataframe and feed it to the `py_eto.pm_daily` funciton:

```
df['ETo_PM_Daily'] = py_eto.pm_daily(
    t_mean=df['T'],
    u2=df['u2'],
    rn=convert_energy(df['Rn']),
    g=df['G'],
    es=calc_es_ea(df['T'], df['RH'])[0],
    ea=calc_es_ea(df['T'], df['RH'])[1],
    delta=calc_delta(df['T']),
    gamma=calc_gamma(calc_pressure(df['Elevation']), t_mean=df['T']
    reference='short',
)
```

Hourly PM-ETo

Preparing a dataframe and feed it to the `py_eto.pm_hourly` funciton:

```
df['ETo_PM_Hourly'] = py_eto.pm_hourly(
    t_hr=df['T'],
    u2_hr=df['u2'],
    rn_hr=convert_energy(df['Rn']),
    es_hr=calc_es_ea(df['T'], df['rh_hr'])[0],
    ea_hr=calc_es_ea(df['T'], df['rh_hr'])[1],
    delta_hr=calc_delta(df['T']),
    gamma_hr=calc_gamma(calc_pressure(df['Elevation']), t_mean=df['
    g_hr=convert_energy(df['G']),
    reference='short',
)
```

Hargreaves-ETo

Preparing a dataframe and feed it to the `py_eto.hargreaves` funciton:

```
df['ETo_Hargreaves'] = py_eto.hargreaves(
    t_min=df['Tmin'],
    t_max=df['Tmax'],
    latitude=df['Latitude'],
    doy=df['DOY'],
    year=2025
)
```

FAO-56 Penman-Monteith Method (Daily)

$$ET_o = \frac{0.408 \cdot \Delta(R_n - G) + \gamma \frac{C_n}{T+273} u_2 (e_s - e_a)}{\Delta + \gamma(1 + C_d \cdot u_2)}$$

where:

- ET_o: reference ET (mm/day)

- T: air temperature at 2 m height ($^\circ C$), `required input`
- u_2: wind speed at 2 m height (m/s), `required input`
- R_n: net radiation at crop surface ($Wh/m^2/day \cdot 0.0036 = MJ/m^2/day$), `required input`

- G: soil heat flux ($MJ/m^2/day$), usually ~0 for daily time step, `optional input`

- e_s: saturation vapor pressure (kPa), `optional input`
- e_a: actual vapor pressure (kPa), `optional input`

- Δ: slope of the saturation vapor pressure curve ($kPa/^\circ C$), `can be calculated`
- γ: psychrometric constant ($kPa/^\circ C$), `can be calculated`

- C_n, C_d: they are parameters which can be found in the Table 8-1 below. For California (e.g., CIMIS), the short-reference parameter is used: $C_n = 900, C_d = 0.34$

Table 8-1. Values for C_n and C_d in Eq. (8-15) and Ratios of G/R_n Used to Estimate Soil Heat Flux Density

	Short Reference, ET_o			Tall Reference, ET_r				
Calculation Time Step	C_n	C_d	G/R_n	C_n	C_d	G/R_n	Units for ET_o, ET_r	Units for R_n, G
Daily	900	0.34	0.00	1,600	0.38	0.00	mm d^{-1}	MJ m^{-2} d^{-1}
Hourly during daytime	37	0.24	0.10	66	0.25	0.04	mm h^{-1}	MJ m^{-2} h^{-1}
Hourly during nighttime	37	0.96	0.50	66	1.7	0.20	mm h^{-1}	MJ m^{-2} h^{-1}

Source: Data from ASCE (2005).

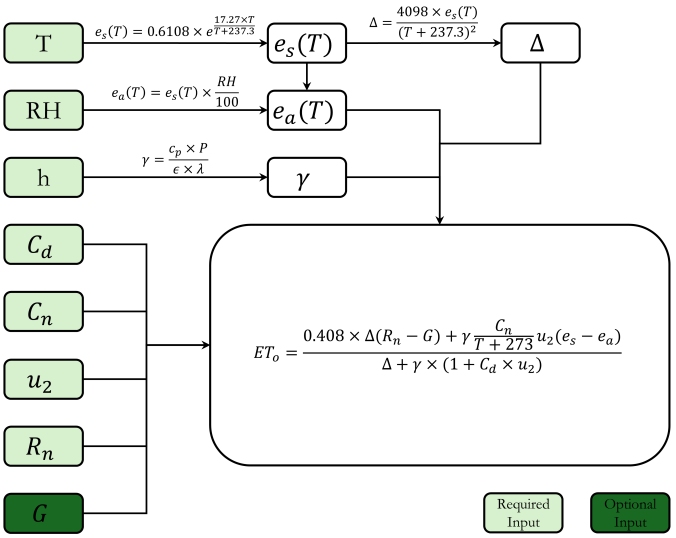

Figure 1. Conceptual framework of the Penman-Monteith workflow, which is easy to understand how to use values from meteorological stations for ET_o calculation.

Calculation of the slope of the saturation vapor pressure curve ($kPa/^\circ C$)

$$\Delta = \frac{4098 \cdot e_s(T)}{(T + 237.3)^2}$$

where:

- T: mean daily air temperature ($^\circ C$), `required input`
- $e_s(T)$: saturation vapor pressure at temperature T ($^\circ C$), in kPa, `can be calculated` as below

Calculation of the saturation and actual vapor pressure (kPa)

$$e_s(T) = 0.6108 e^{\frac{17.27 \cdot T}{T+237.3}}$$

ParseError: KaTeX parse error: Can't use function '$' in math mode at position 35: … \frac{RH}{100}$$ where the $…

where:

- c_p: specific heat of moist air, $1.013 \times 10^{-3} MJ/kg/^\circ C$
- ϵ: the ratio of molecular weight of water vapor to dry air, ~0.622
- λ: the latent heat of vaporization, $2.45\ MJ/kg$
- P: atmospheric pressure (kPa), `optional input`

$$P = 101.3 \times \frac{293 - 0.0065 \times h}{293}^{5.26}$$

- h: meters above sea level (m), `required input`

FAO-56 Penman-Monteith Method (Hourly)

The physical framework remains consistent with the daily step. The difference are listed below:

- **Dynamic Aerodynamic Coefficients (C_n and C_d):** These parameters are adjusted based on the reference crop type (short - grass vs. tall - alfalfa) and prevailing radiation conditions (Table 8-1).
- **Diurnal Partitioning via Net Radiation (R_n):** The sign and magnitude of R_n are utilized as the primary threshold to differentiate between daytime ($R_n > 0$) and nighttime ($R_n \leq 0$) conditions.
- **Ground Heat Flux (G) as One Optional Input:** The model provides the flexibility to utilize either measured or estimated soil heat flux data. If G is directly monitored (e.g., via heat flux plates), the function prioritizes these observations for higher precision. In the absence of ground measurements, the model automatically estimates G as a dynamic fraction of net radiation (R_n), applying distinct scaling factors for daytime and nighttime to capture the diurnal energy exchange between the surface and the subsurface.

Hargreaves Method (Daily)

$$ETo = 0.0023 \cdot R_a \cdot (T_c + 17.8) \cdot \sqrt{T_{max} - T_{min}}$$

where:

- 0.0023: the empirical value
- T_{max}: the maximum temperature in that day ($^\circ C$)
- T_{min}: the minimum temperature in that day ($^\circ C$)
- T_c: $\frac{T_{max}+T_{min}}{2}$ in that day ($^\circ C$)
- R_a: extraterrestrial radiation, which can be estimated by latitude and the day of the year, as explained below:

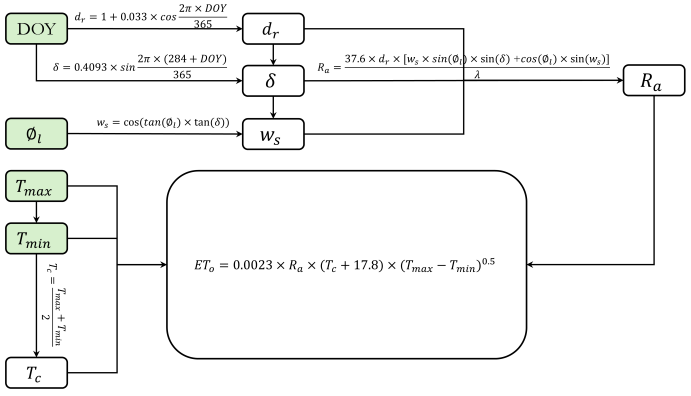

Figure 2. Conceptual framework of the Hargreaves workflow.

$$R_a = \frac{37.6 \cdot d_r \cdot [w_s \cdot sin(\phi_l) sin(\delta) + cos(\phi_l) \cdot sin(w_s)]}{\lambda}$$

$$\delta = 0.4093 \cdot sin(\frac{2\pi(284 + DOY)}{365})$$

$$d_r = 1 + 0.033 \cdot cos(\frac{2\pi \cdot DOY}{365})$$

$$w_s = cos(tan(\phi_l) \cdot tan(\delta))$$

where:

- d_r: relative distance from the earth to the sun
- DOY: day of the year
- w_s: sunset hour angle (rad)
- ϕ_l: latitude (rad)
- δ: declination of the sun (rad)
- λ: latent heat of vvaporization, $\lambda = 2.54 MJ/kg$

Reference

- Task Committee on Revision of Manual 70. (2016, April). Evaporation, evapotranspiration, and irrigation water requirements. American Society of Civil Engineers.
- Torres, A. F., Walker, W. R., & McKee, M. (2011). Forecasting daily potential evapotranspiration using machine learning and limited climatic data. Agricultural Water Management, 98(4), 553-562.

How to cite this work

Gao, R., Khan, M., & Viers, J. (2026). A Python Toolkit for Reference Evapotranspiration (ET_o) Calculation Directly from Pandas DataFrames (Initial). Zenodo. https://doi.org/10.5281/zenodo.19197914

Repository update information

- Creation date: 2026-03-20
- Last update: 2026-03-24
- **Contact:** If you encounter any issues or have questions, please contact Rui Gao:
  - Rui.Ray.Gao@gmail.com
  - RuiGao@ucmerced.edu