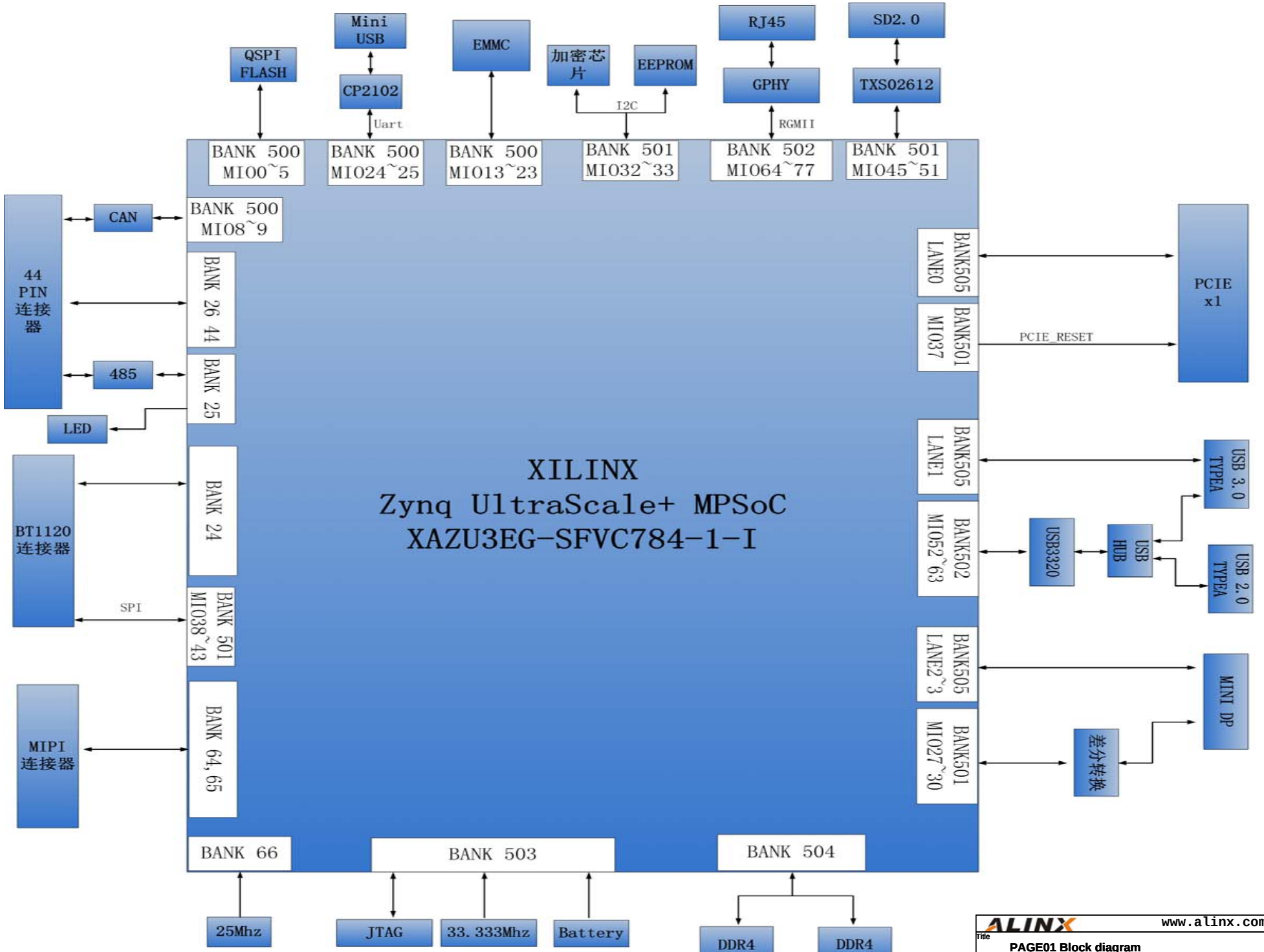

ALINX Confidential

ALINX www.alinx.com

Title: PAGE01 Block diagram

Size | Document Number: EdgeBoard-lite开发板 Schematics | Rev: 1.0

Date: Monday, December 30, 2019 | Sheet 1 of 23

MODE[3:0]	BOOT MODE	Descritpion
0000	PS JTAG	PS JTAG Interface
0001	Quad_SPI(24b)	24-Bit addresssing(QSPI24)
0010	Quad_SPI(32b)	32-Bit addresssing(QSPI32)
0011	SD0(2.0)	SD2.0
0101	SD1(2.0)	SD2.0
0110	eMMC(1.8V)	eMMC version 4.5 at 1.8V
0111	USB0(2.0)	USB 2.0 only
1110	SD1 LS(3.0)	SD 3.0

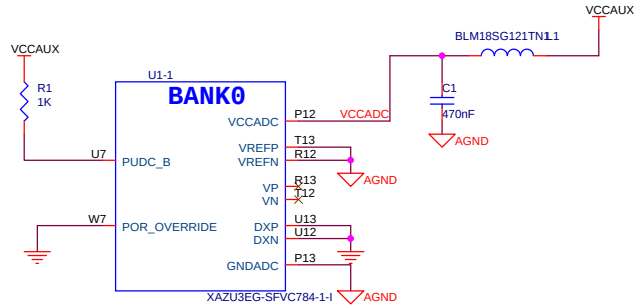

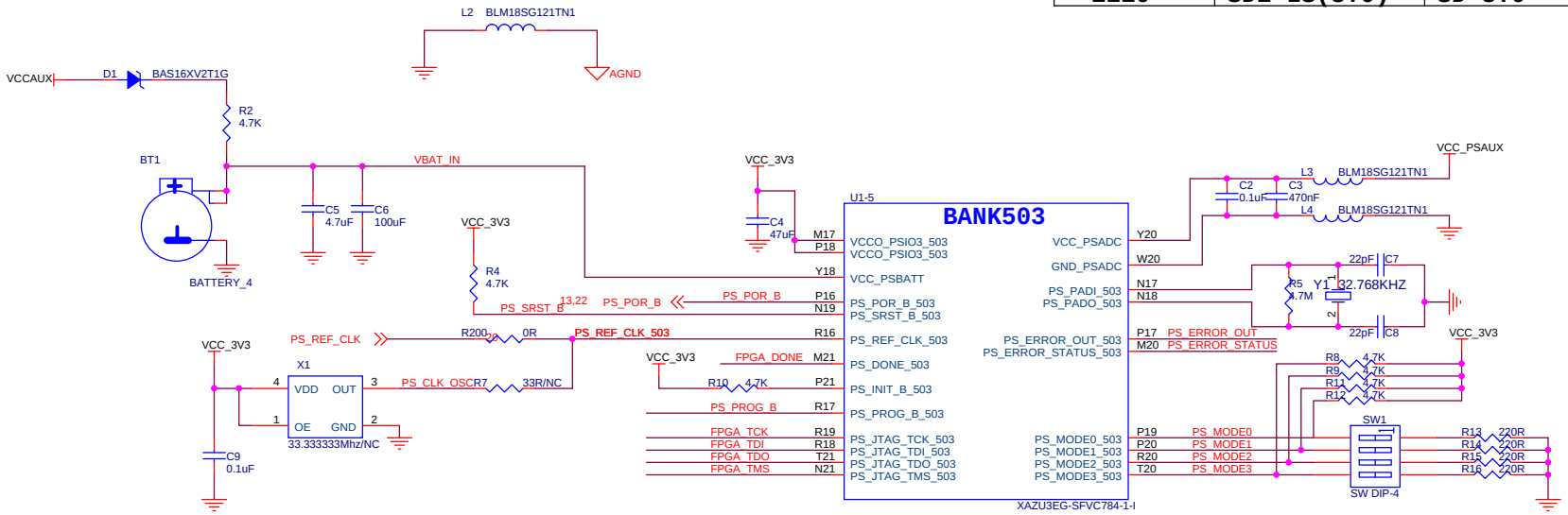

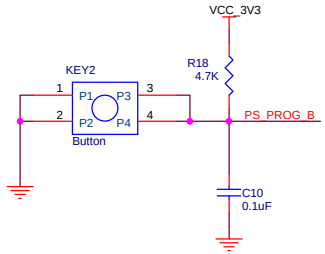

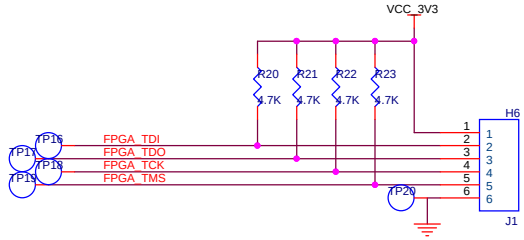

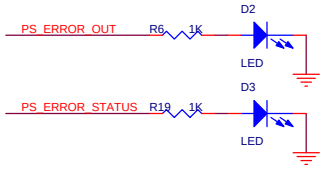

ALINX Confidential

www.alinx.com

Title	Page02 Z7 Bank0 & BANK503	
Size	Document Number: EdgeBoard-lite开发板 Schematics	Rev 1.0
Date: Friday, November 29, 2019	Sheet 2 of 23	

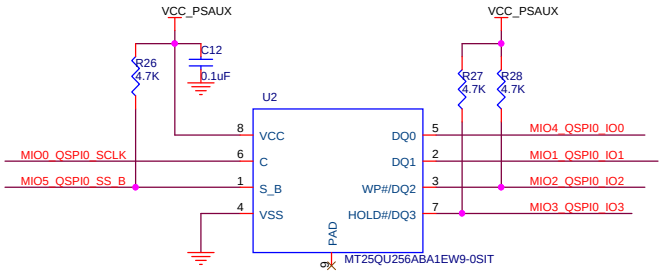

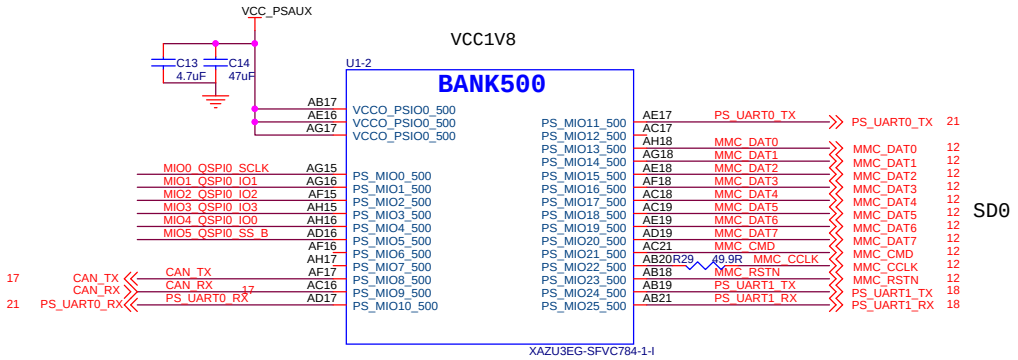

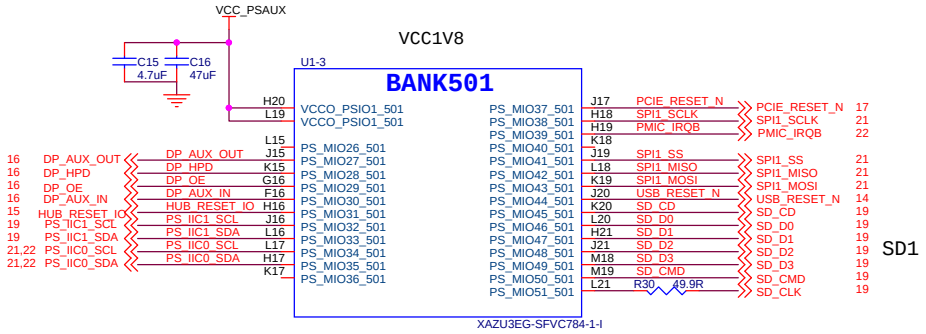

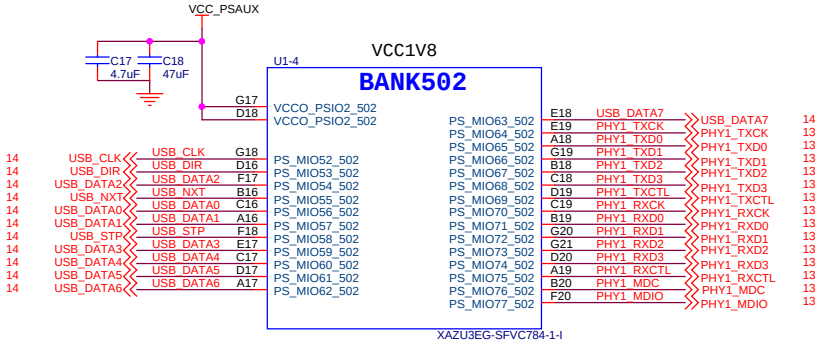

ALINX Confidential

ALINX www.alinx.com

Title: PAGE03 Z7 MIO-Config

Size | Document Number: EdgeBoard-lite开发板 Schematics | Rev: 1.0

Date: Friday, November 29, 2019 | Sheet 3 of 23

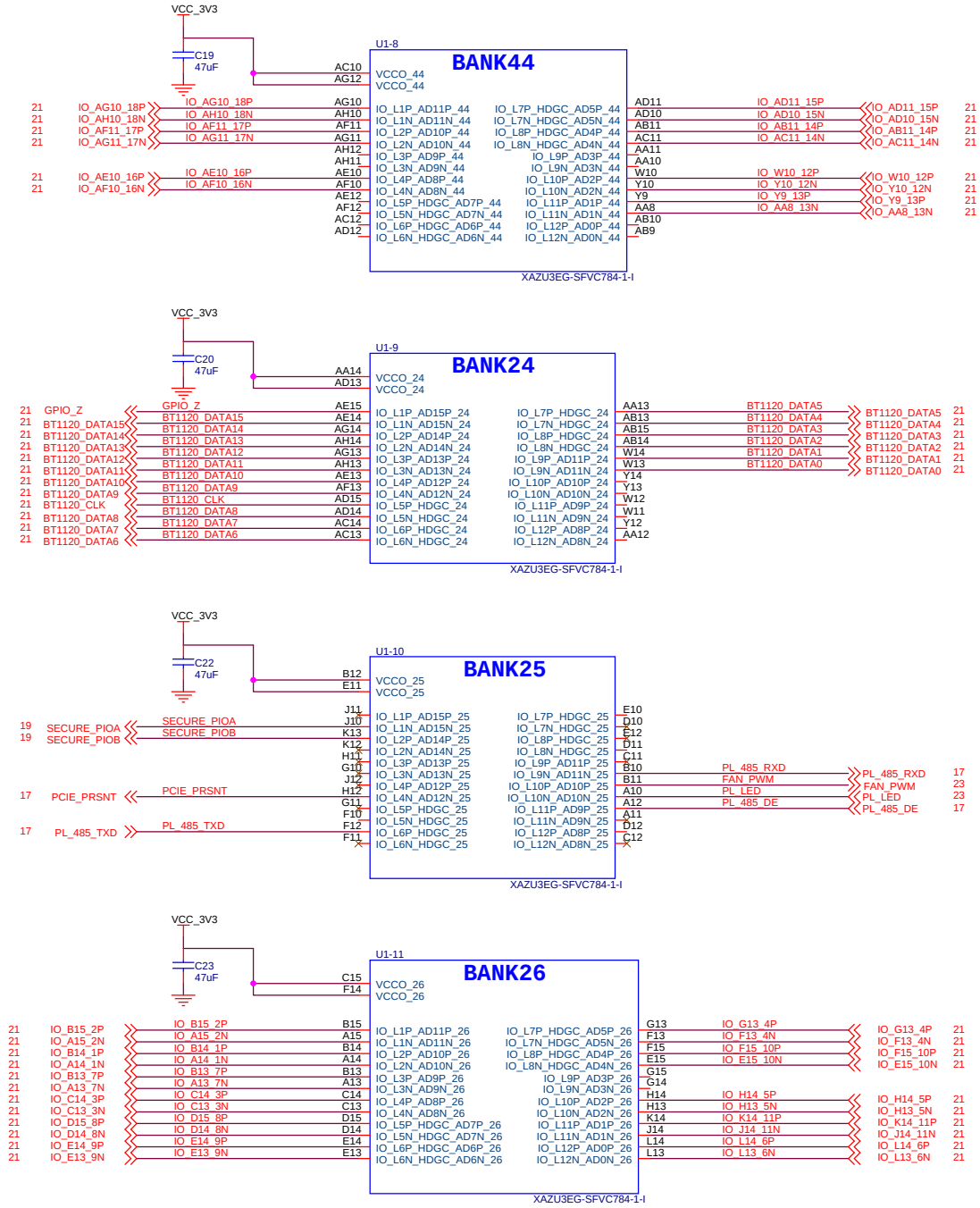

ALINX Confidential

www.alinx.com

Title: PAGE04 Z7 Bank44_24_25_26

Size | Document Number: EdgeBoard-lite开发板 Schematics | Rev: 1.0

Date: Monday, December 30, 2019 | Sheet 4 of 23

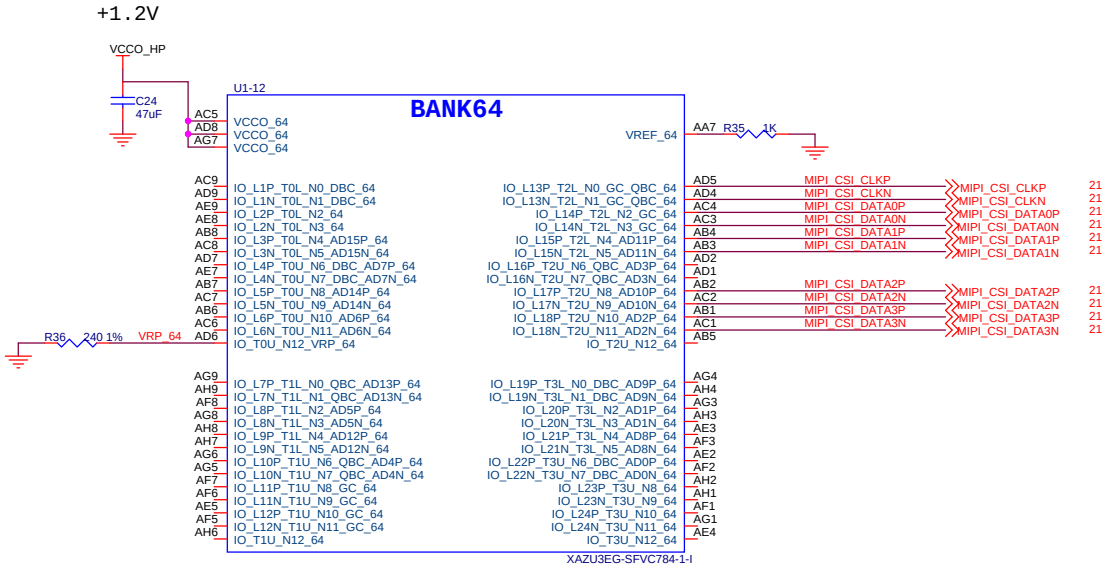

ALINX Confidential

ALINX www.alinx.com

Title	PAGE05 Z7 Bank64	
Size	Document Number: EdgeBoard-lite开发板 Schematics	Rev: 1.0
Date: Monday, December 30, 2019	Sheet 5 of 23	

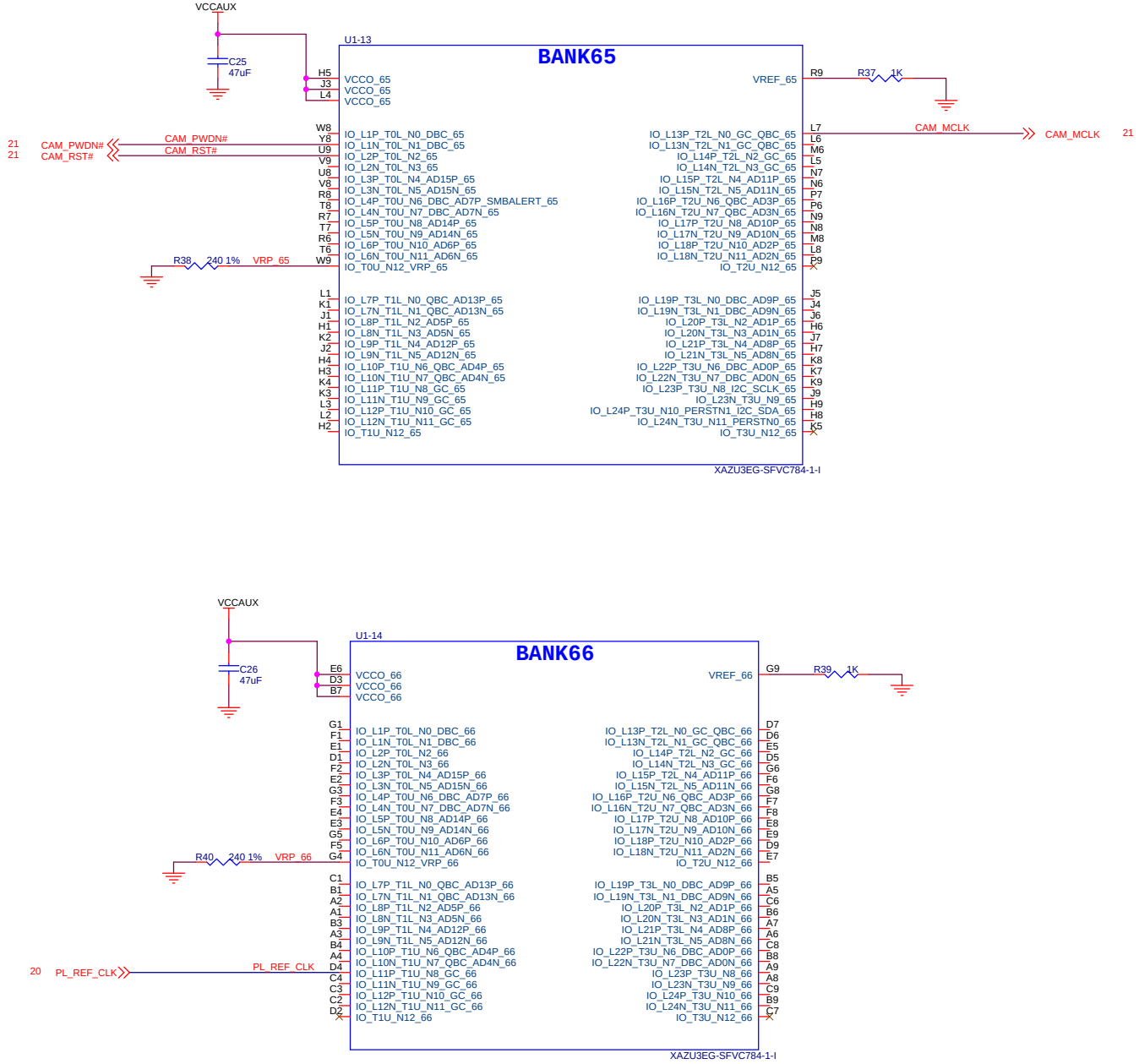

ALINX www.alinx.com

Title: PAGE06 Z7 Bank65_66

Size | Document Number: EdgeBoard-lite开发板 Schematics | Rev 1.0

Date: Monday, December 30, 2019 | Sheet 6 of 23

ALINX Confidential

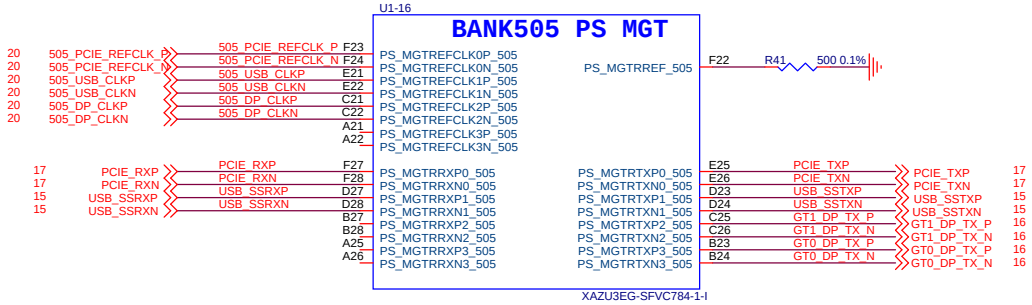

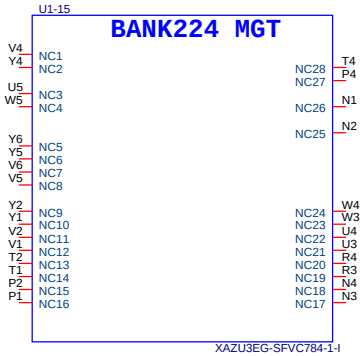

ALINX Confidential

ALINX www.alinx.com

Title: PAGE07 Z7 Bank505

Size | Document Number: EdgeBoard-lite开发板 Schematics | Rev: 1.0

Date: Monday, December 30, 2019 | Sheet 7 of 23

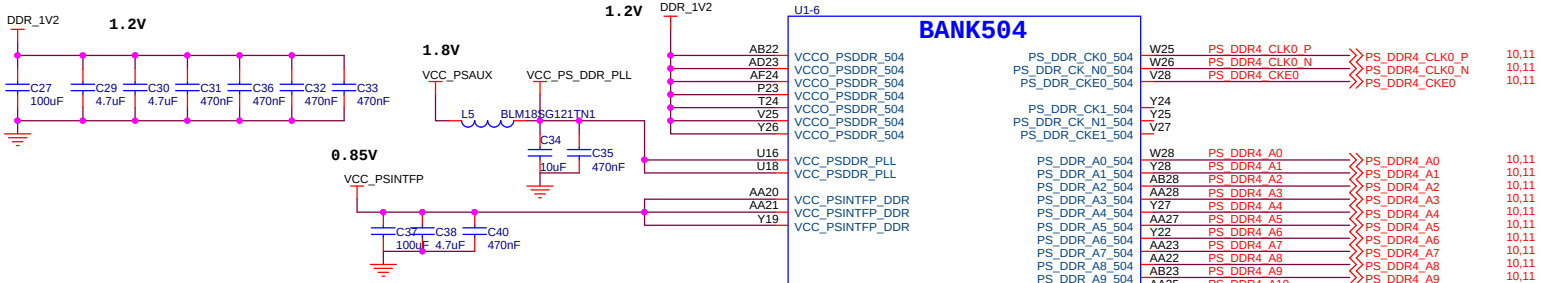

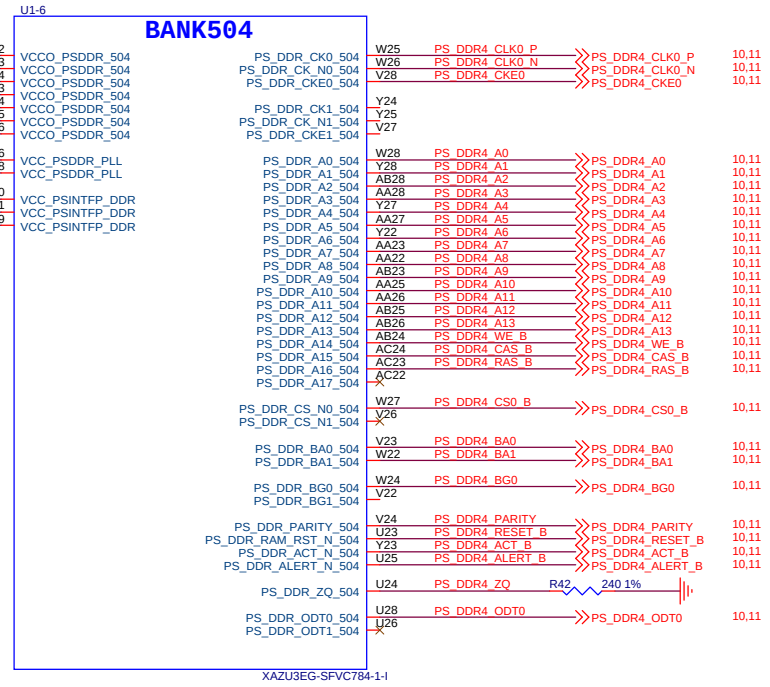

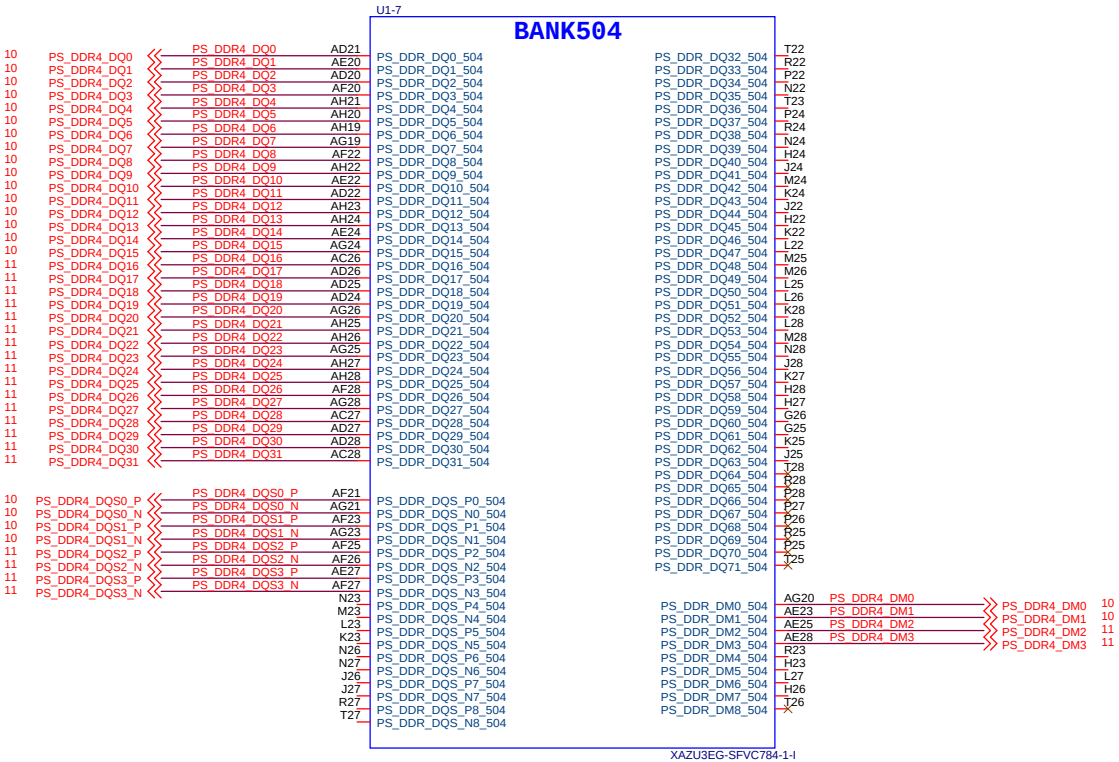

ALINX Confidential

ALINX www.alinx.com

Title: PAGE08 Z7 Bank504

Size | Document Number: EdgeBoard-lite开发板 Schematics | Rev: 1.0

Date: Monday, December 30, 2019 | Sheet 8 of 23

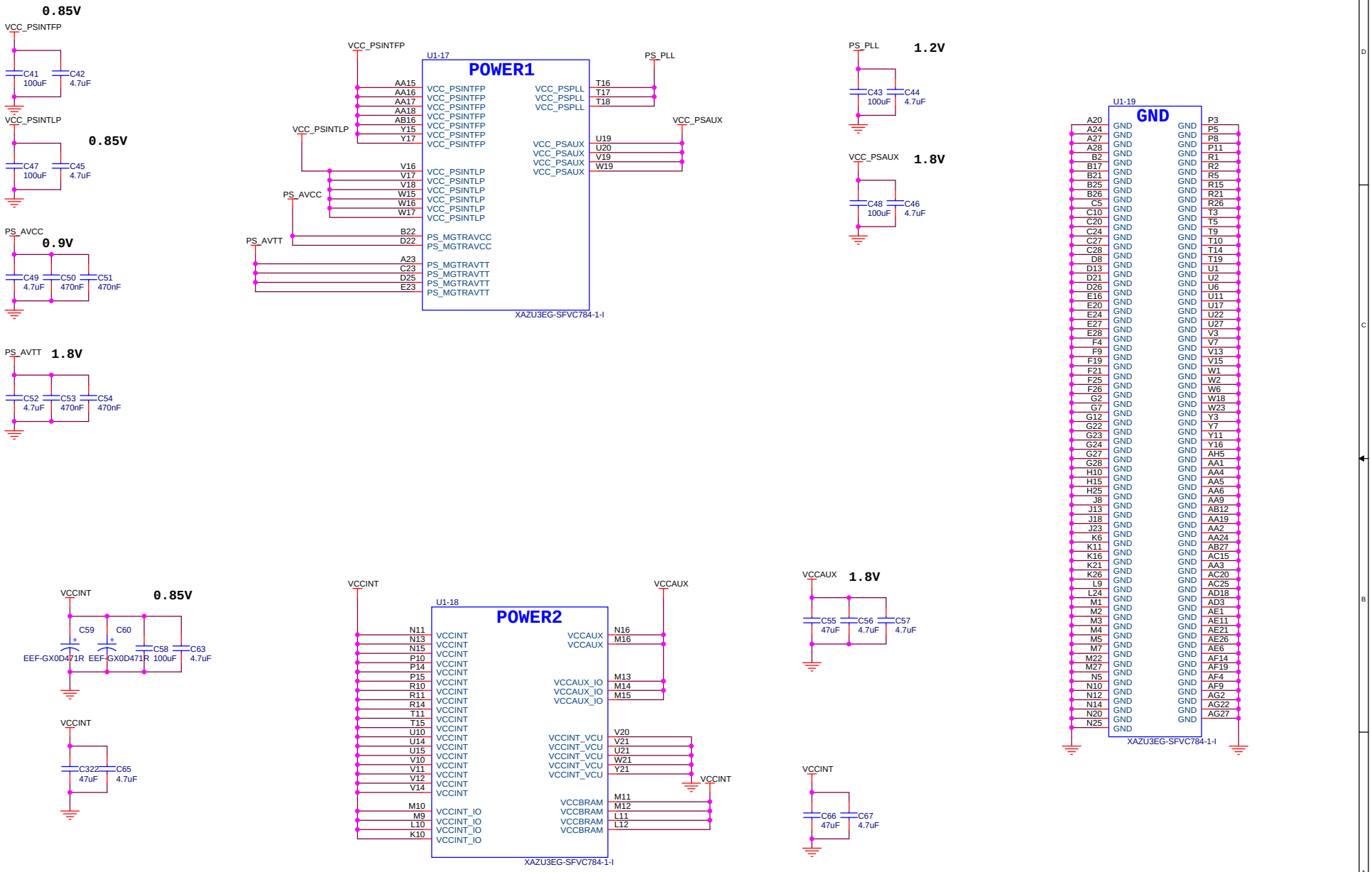

ALINX Confidential

ALINX	www.alinx.com
Title	PAGE09 Z7 Power
Size	Document Number: EdgeBoard-lite开发板 Schematics
Rev	1.0
Date:	Friday, November 29, 2019
Sheet	9 of 23

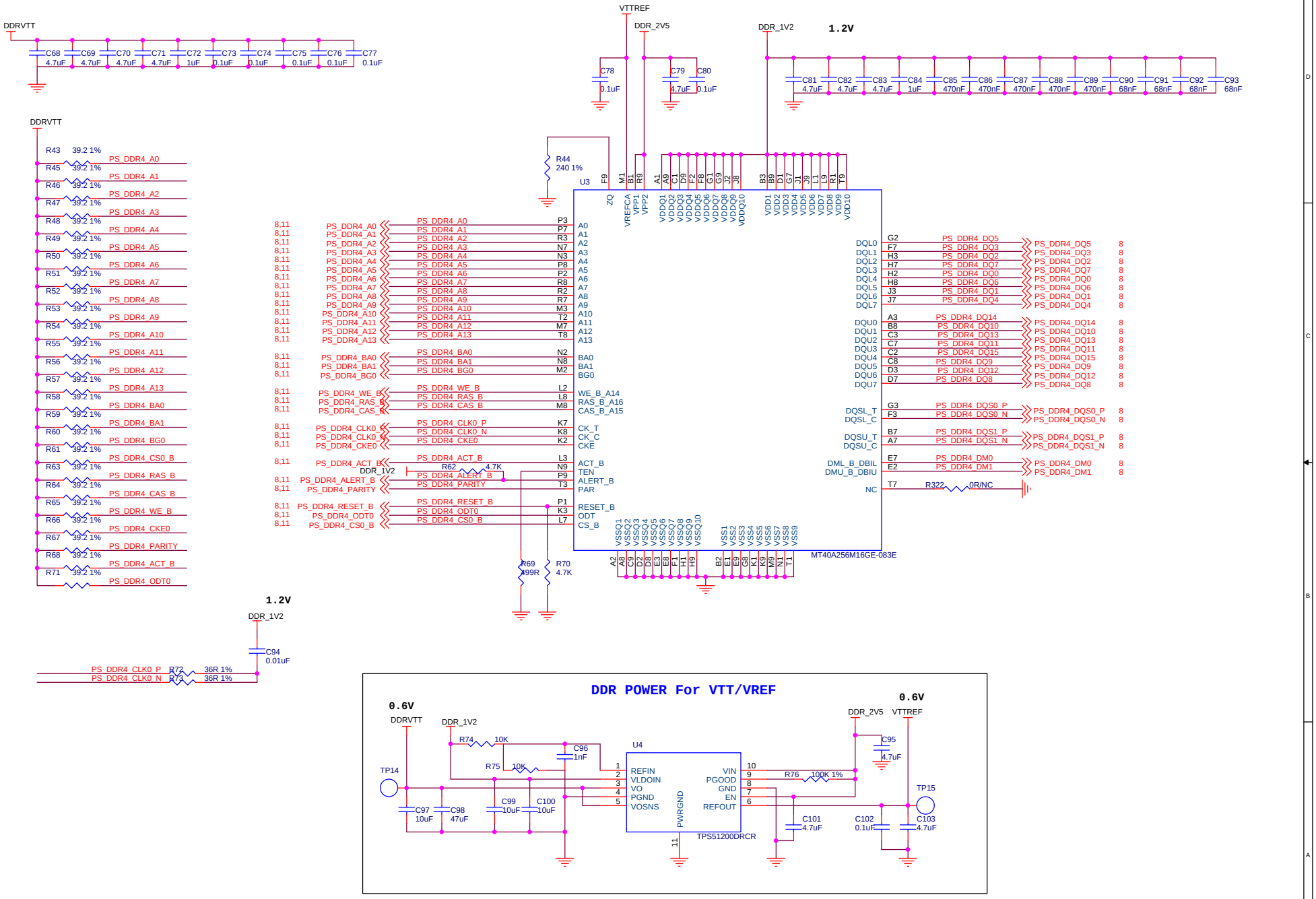

ALINX Confidential

www.alinx.com

Title	PAGE10 PS_DDR4_1
Size	Document Number: EdgeBoard-lite开发板 Schematics
Rev	1.0
Date:	Monday, December 30, 2019
Sheet	10 of 23

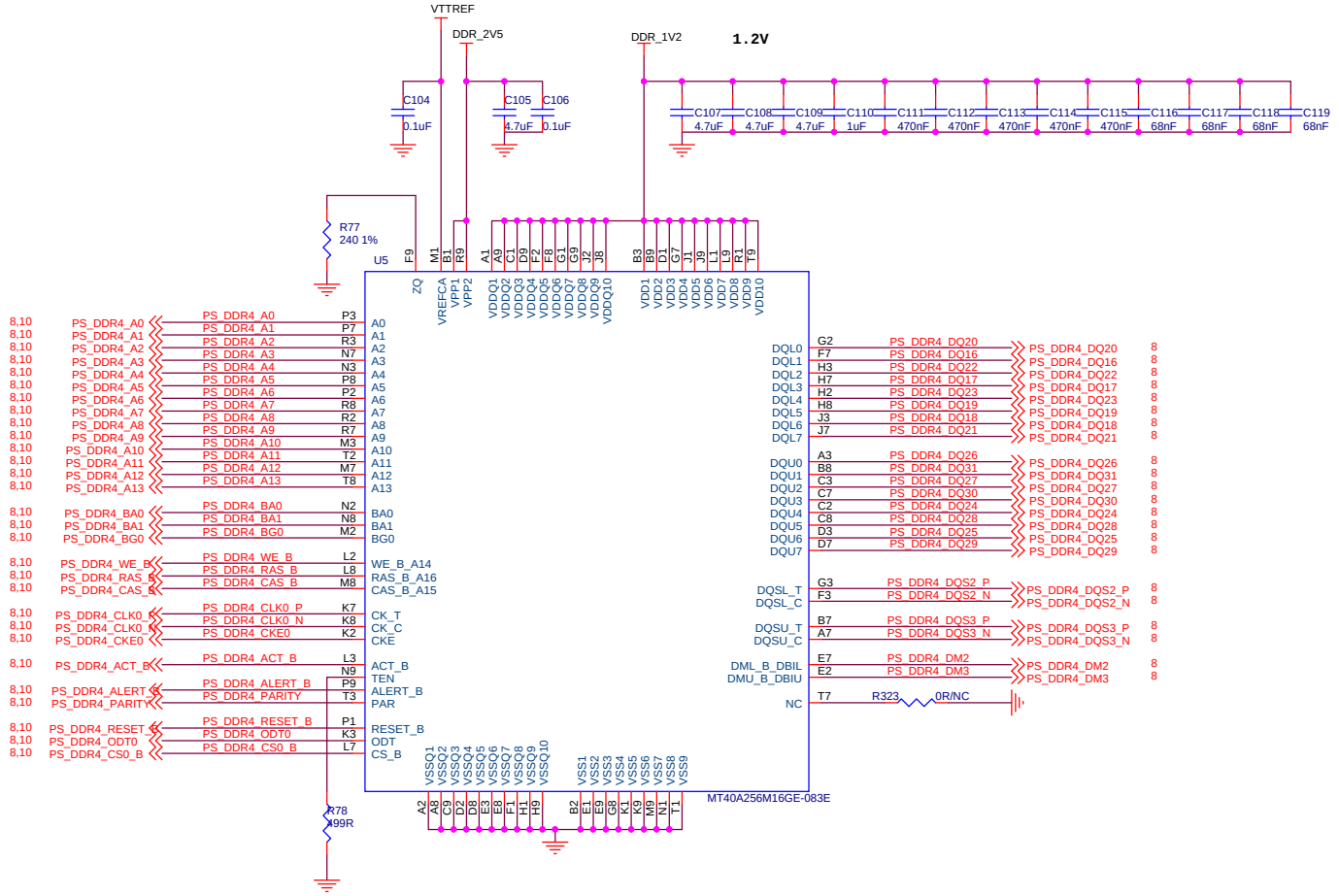

ALINX Confidential

ALINX	www.alinx.com
Title	PAGE11 PS_DDR4_2
Size	Document Number: EdgeBoard-lite开发板 Schematics
Rev	1.0
Date:	Monday, December 30, 2019
Sheet	11 of 23

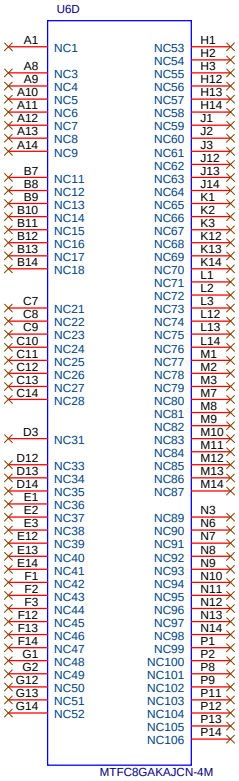

ALINX Confidential

ALINX www.alinx.com

Title: PAGE12 eMMC

Size | Document Number: EdgeBoard-lite开发板 Schematics | Rev: 1.0

Date: Monday, December 30, 2019 | Sheet 12 of 23

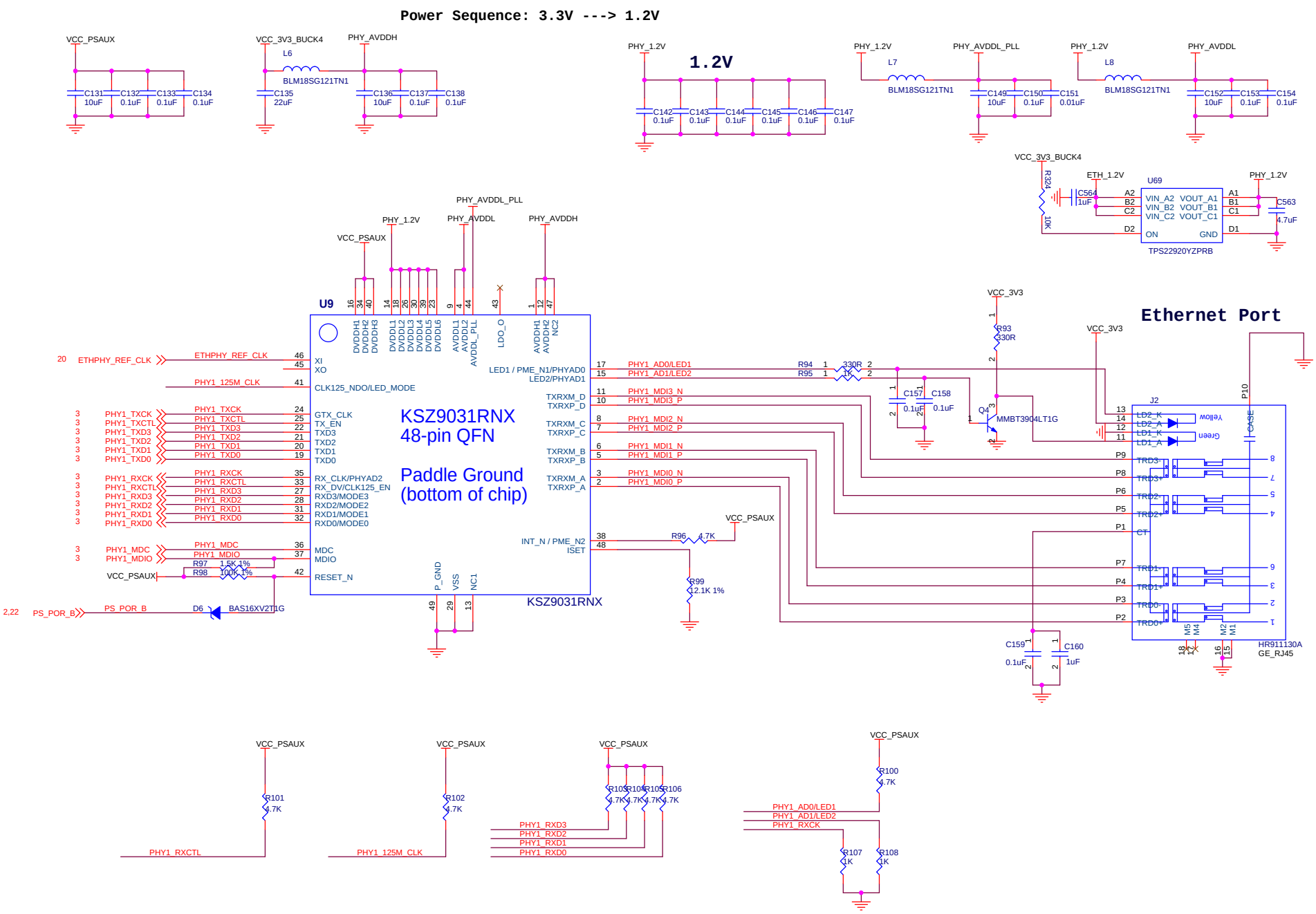

ALINX Confidential

ALINX	www.alinx.com
Title	PAGE13 PS Ethernet
Size	Document Number: EdgeBoard-lite开发板 Schematics
Rev	1.0
Date:	Monday, December 30, 2019
Sheet	13 of 23

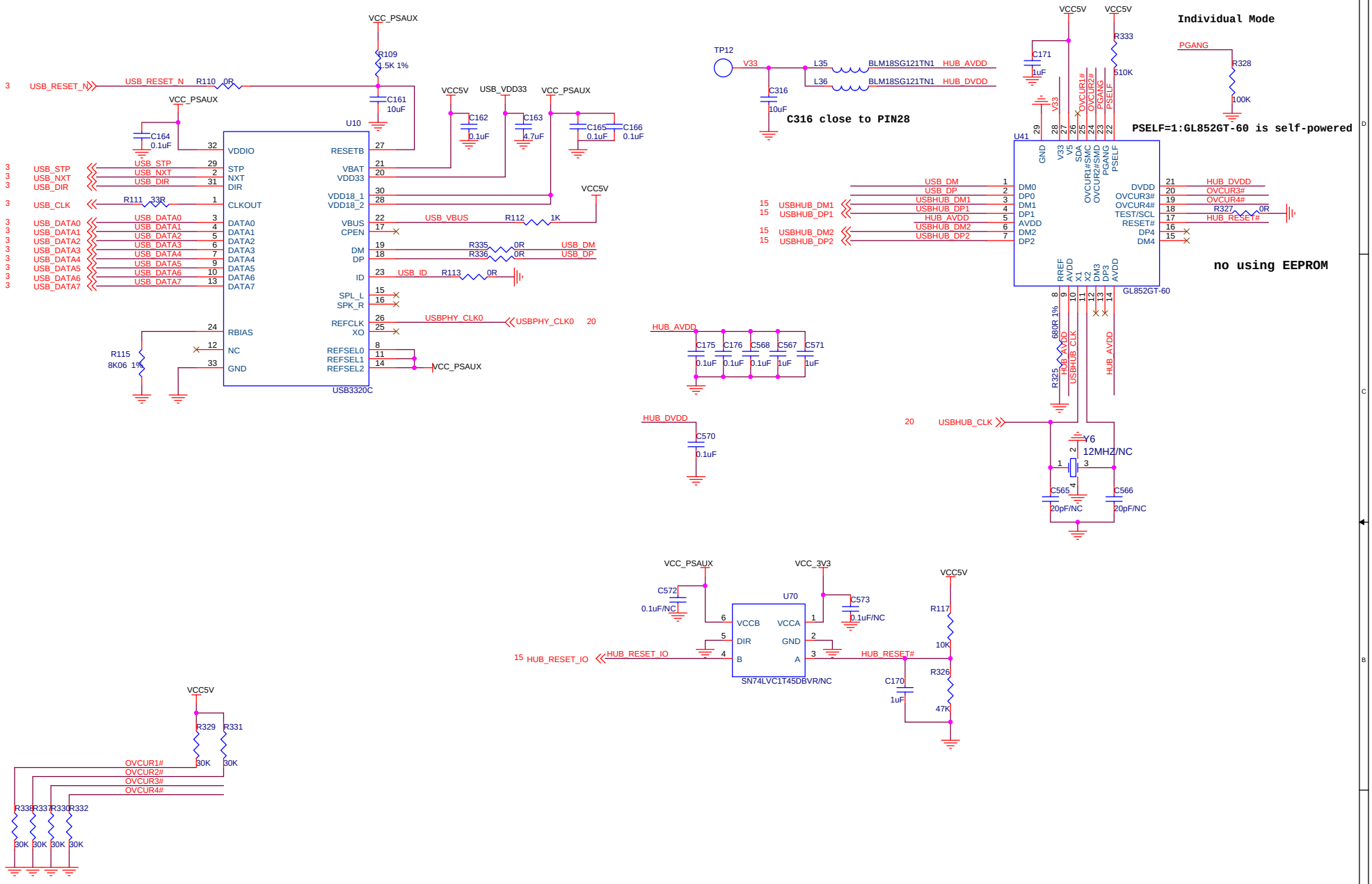

ALINX Confidential

ALINX	www.alinx.com	
Title: PAGE14 USB & HUB		
Size	Document Number: EdgeBoard-lite开发板 Schematics	Rev: 1.0
Date: Friday, November 29, 2019	Sheet 14 of 23	

AC Couple For TX

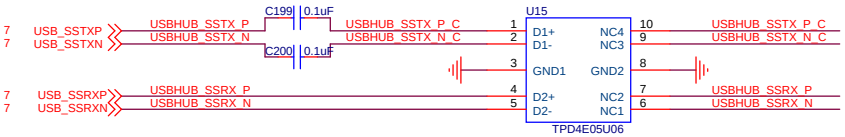

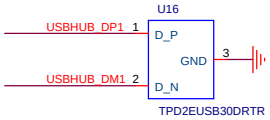

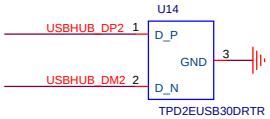

USB3.0 PORT

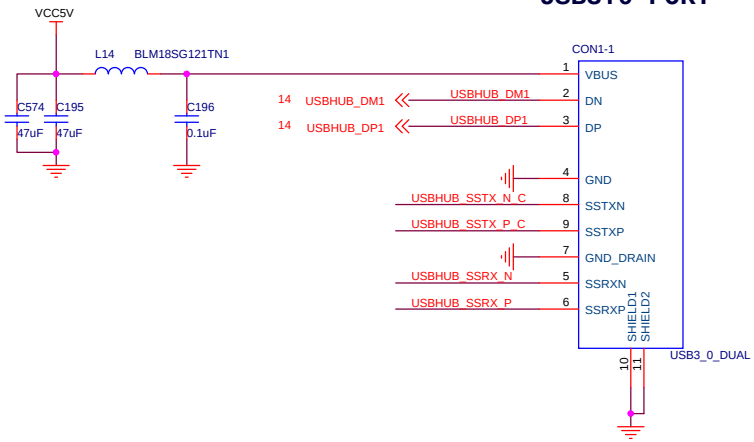

USB3.0 PORT

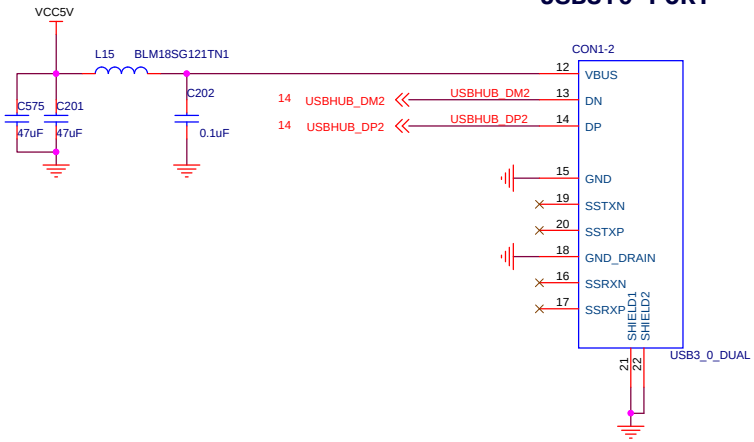

ALINX Confidential

ALINX	www.alinx.com
Title	PAGE15 USB CONN
Size	Document Number: EdgeBoard-lite开发板 Schematics
Rev	1.0
Date:	Monday, December 30, 2019
Sheet	15 of 23

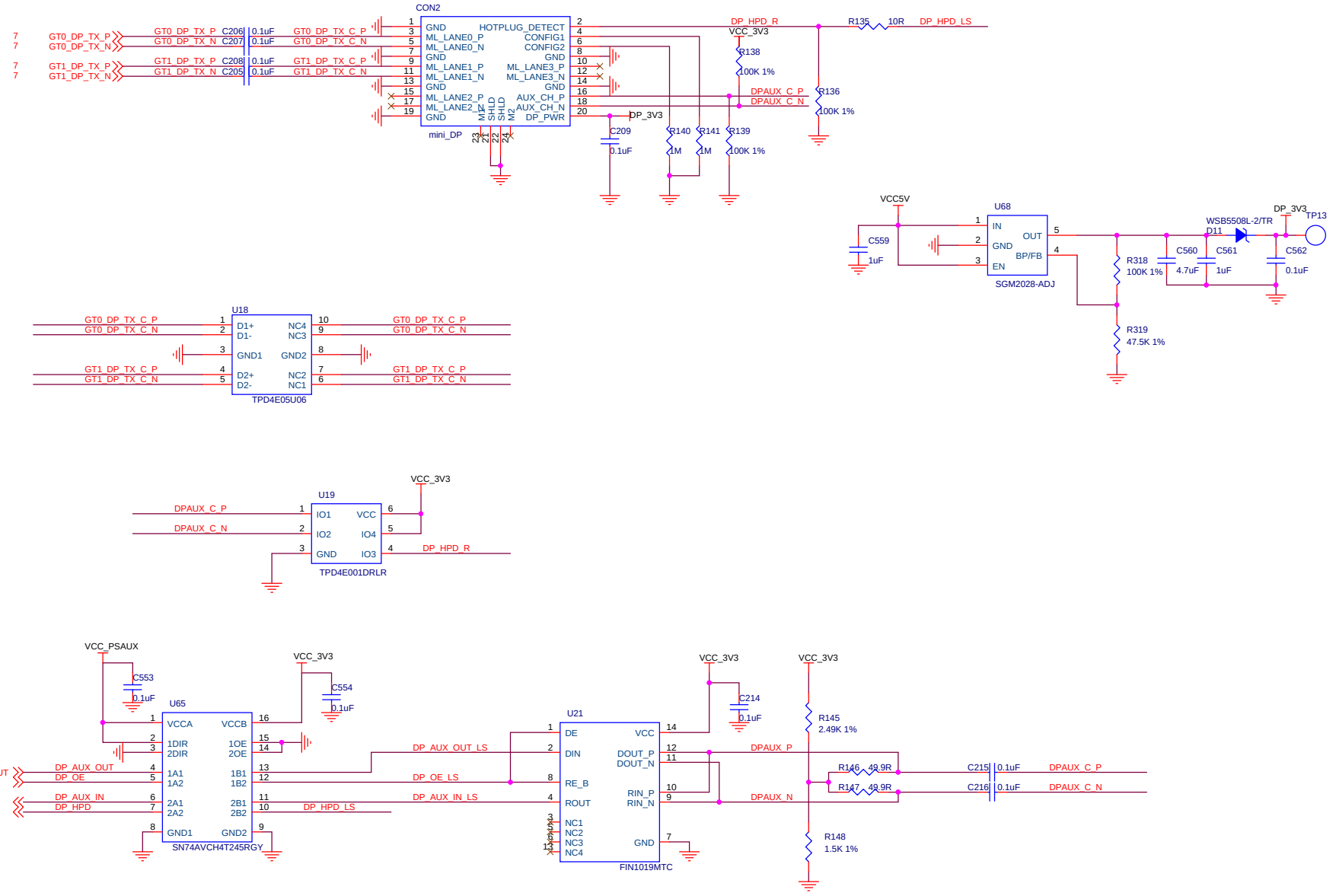

ALINX Confidential

ALINX	www.alinx.com
Title	PAGE16 Display Port
Size	Document Number: EdgeBoard-lite开发板 Schematics
Rev	1.0
Date:	Monday, December 30, 2019
Sheet	16 of 23

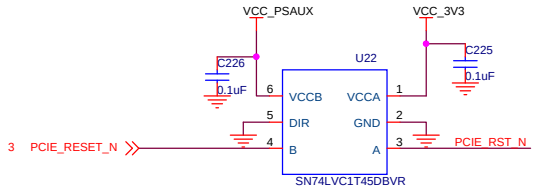

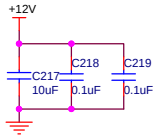

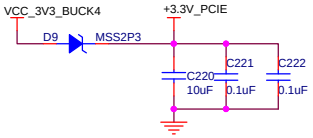

PCIE X1 Socket

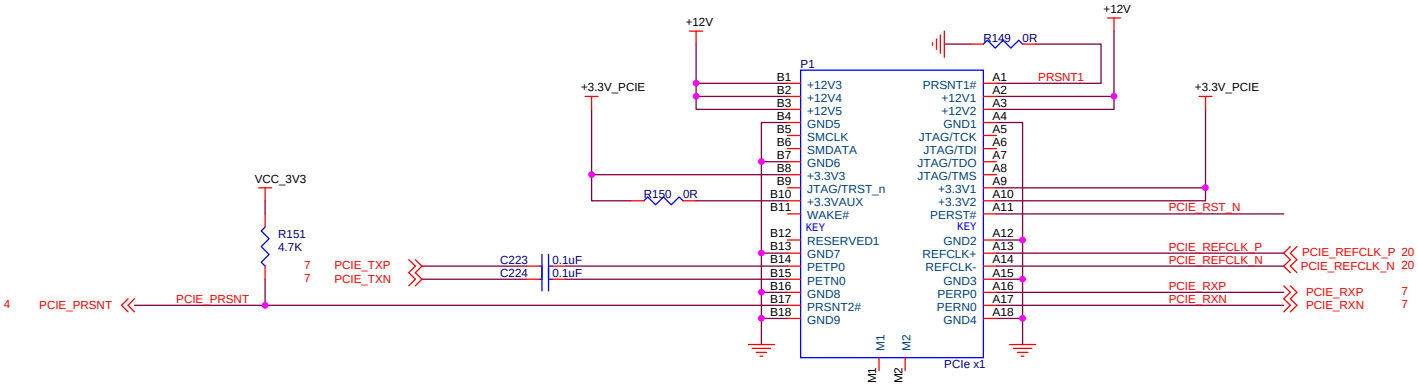

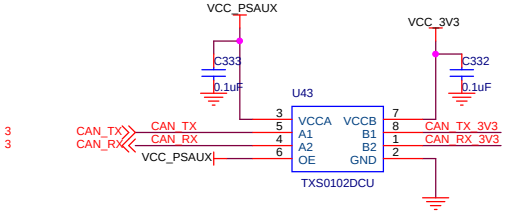

CAN

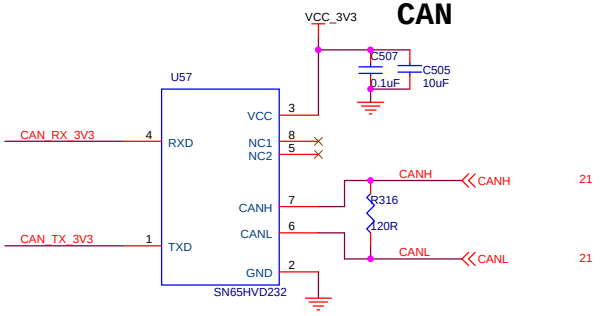

485

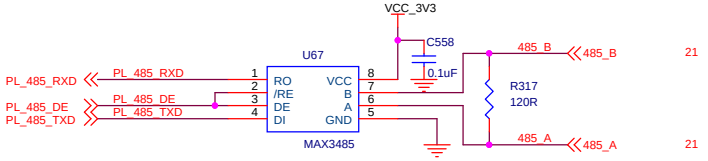

ALINX Confidential

ALINX www.alinx.com

Title	PAGE17 PCIE
Size	
Document Number	EdgeBoard-lite开发板 Schematics
Rev	1.0
Date:	Monday, December 30, 2019
Sheet	17 of 23

PS UART PORT

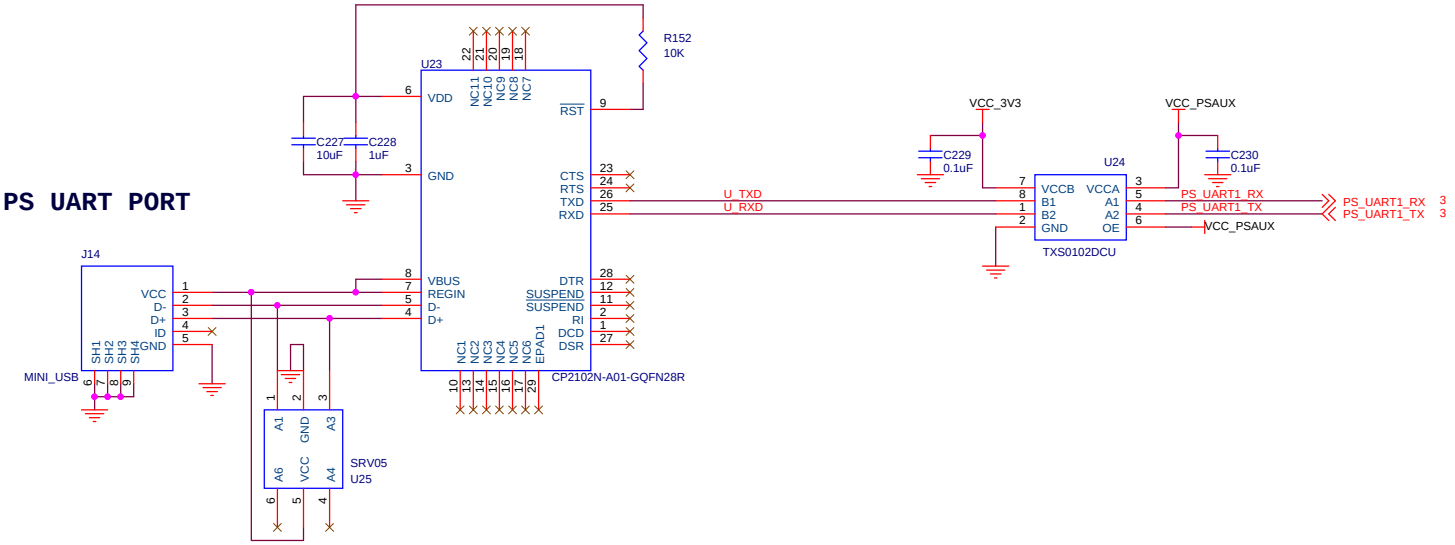

ALINX Confidential

ALINX	www.alinx.com	
Title: PAGE18 PS UART		
Size	Document Number: EdgeBoard-lite开发板 Schematics	Rev: 1.0
Date: Friday, November 29, 2019	Sheet 18 of 23	

SD Card Connector

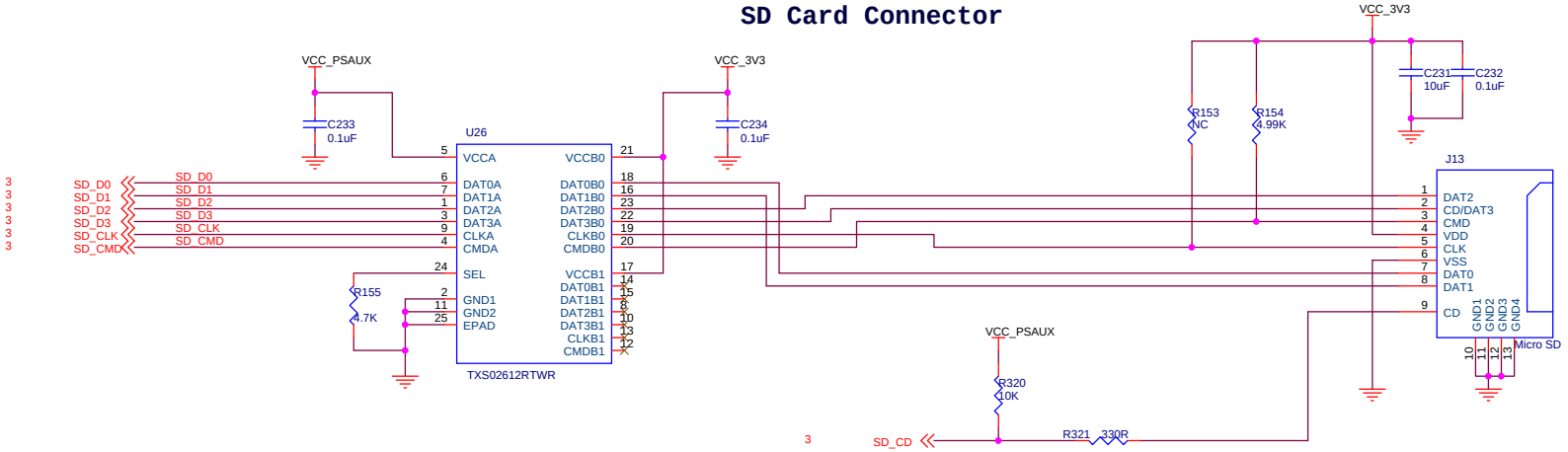

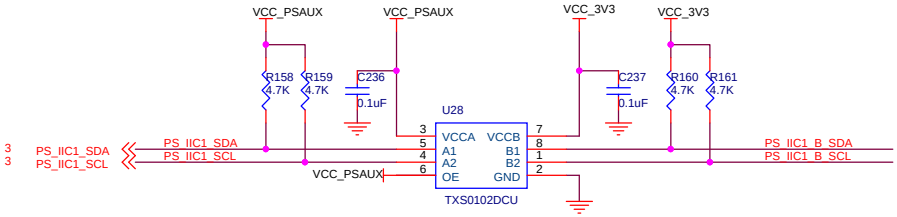

PS_IIC1: IIC ADDRESS IS 0x50

EEPROM

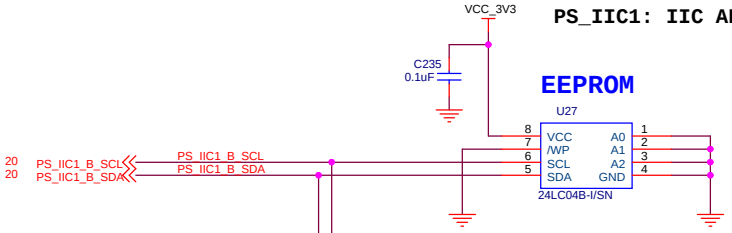

Security IC

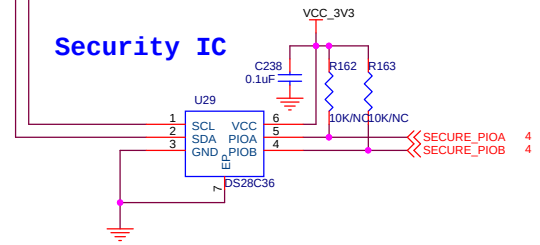

PS_IIC1: IIC ADDRESS IS 0x1B

ALINX Confidential

ALINX	www.alinx.com	
Title: PAGE19 SD & EEPROM		
Size	Document Number: EdgeBoard-lite开发板 Schematics	Rev: 1.0
Date: Friday, November 29, 2019	Sheet 19 of 23	

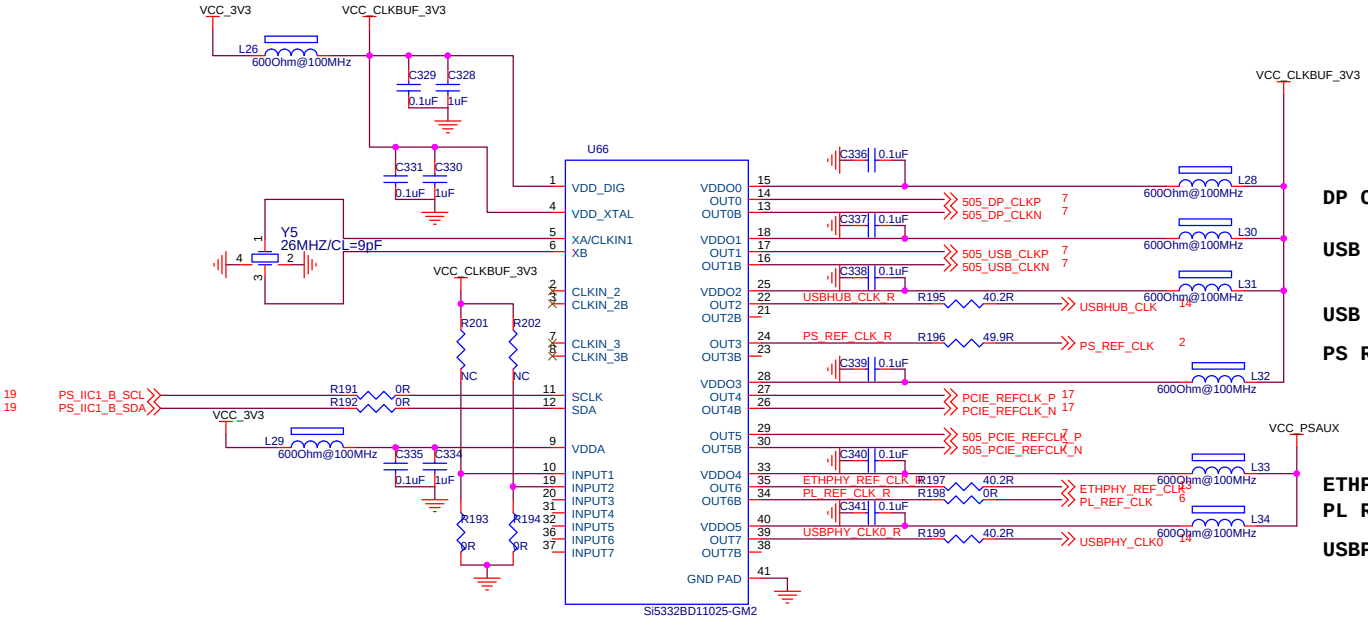

DP CLOCK = 27Mhz

USB CLOCK = 26Mhz

USB HUB CLOCK = 12Mhz

PS REF CLOCK = 33.3333Mhz

ETHPHY REF CLOCK = 25Mhz

PL REF CLOCK = 25Mhz

USBPHY CLOCK = 24Mhz

PS_IIC1: IIC ADDRESS IS 0x76

ALINX Confidential

ALINX	www.alinx.com	
Title: PAGE20 CLOCK		
Size	Document Number: EdgeBoard-lite开发板 Schematics	Rev: 1.0
Date: Monday, December 30, 2019	Sheet 20 of 23	

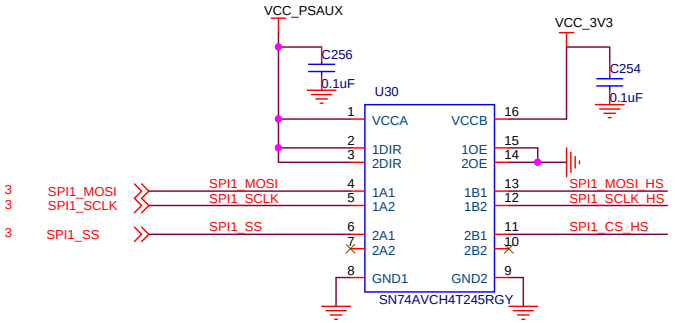

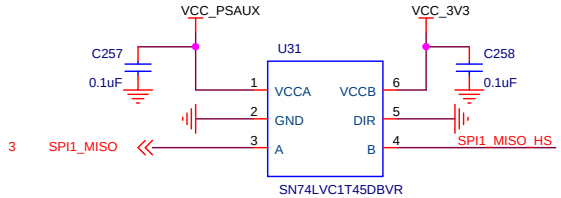

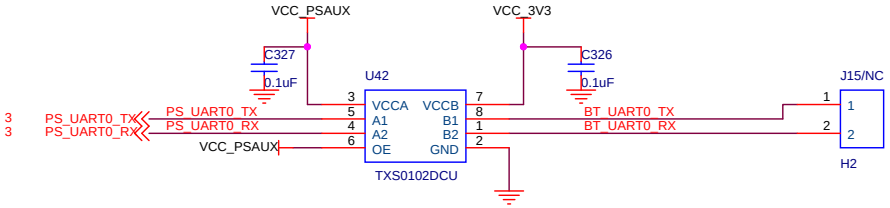

BT 1120

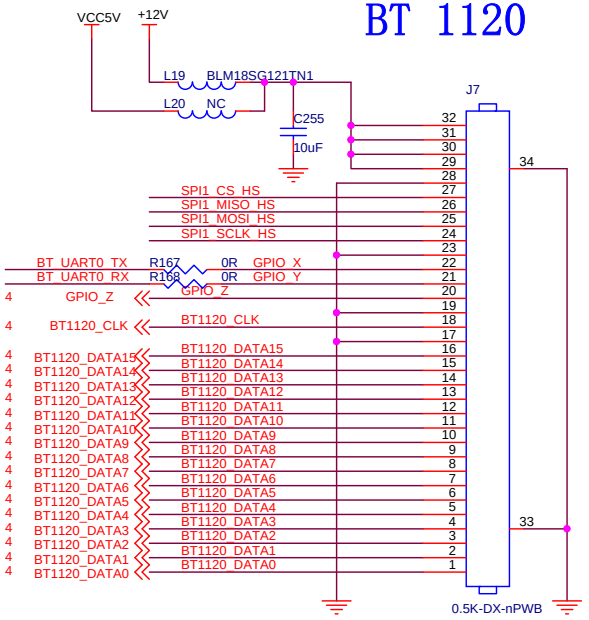

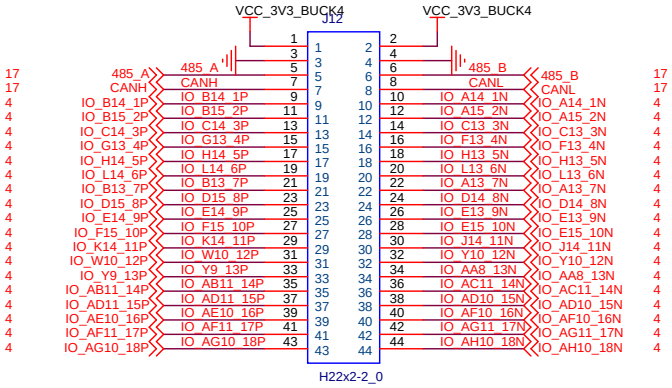

PS_IIC0: IIC ADDRESS IS 0x1B

MIPI Connector

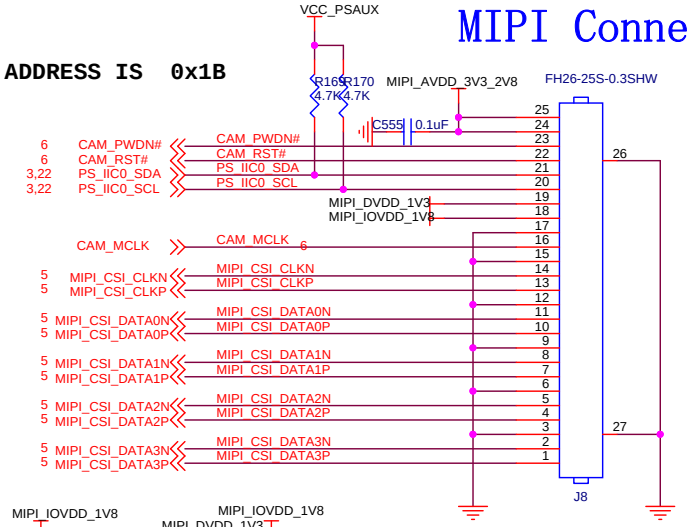

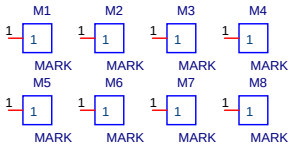

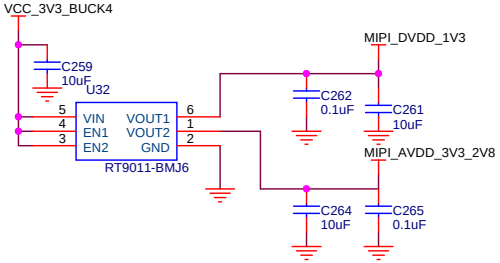

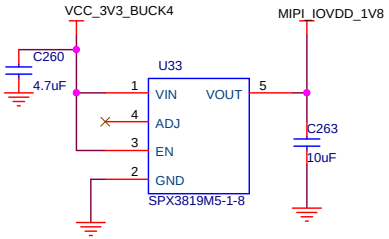

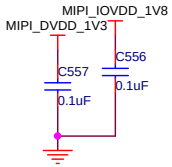

ALINX Confidential

ALINX www.alinx.com

Title: PAGE21 Connector

Size | Document Number: EdgeBoard-lite开发板 Schematics | Rev: 1.0

Date: Monday, December 30, 2019 | Sheet 21 of 23

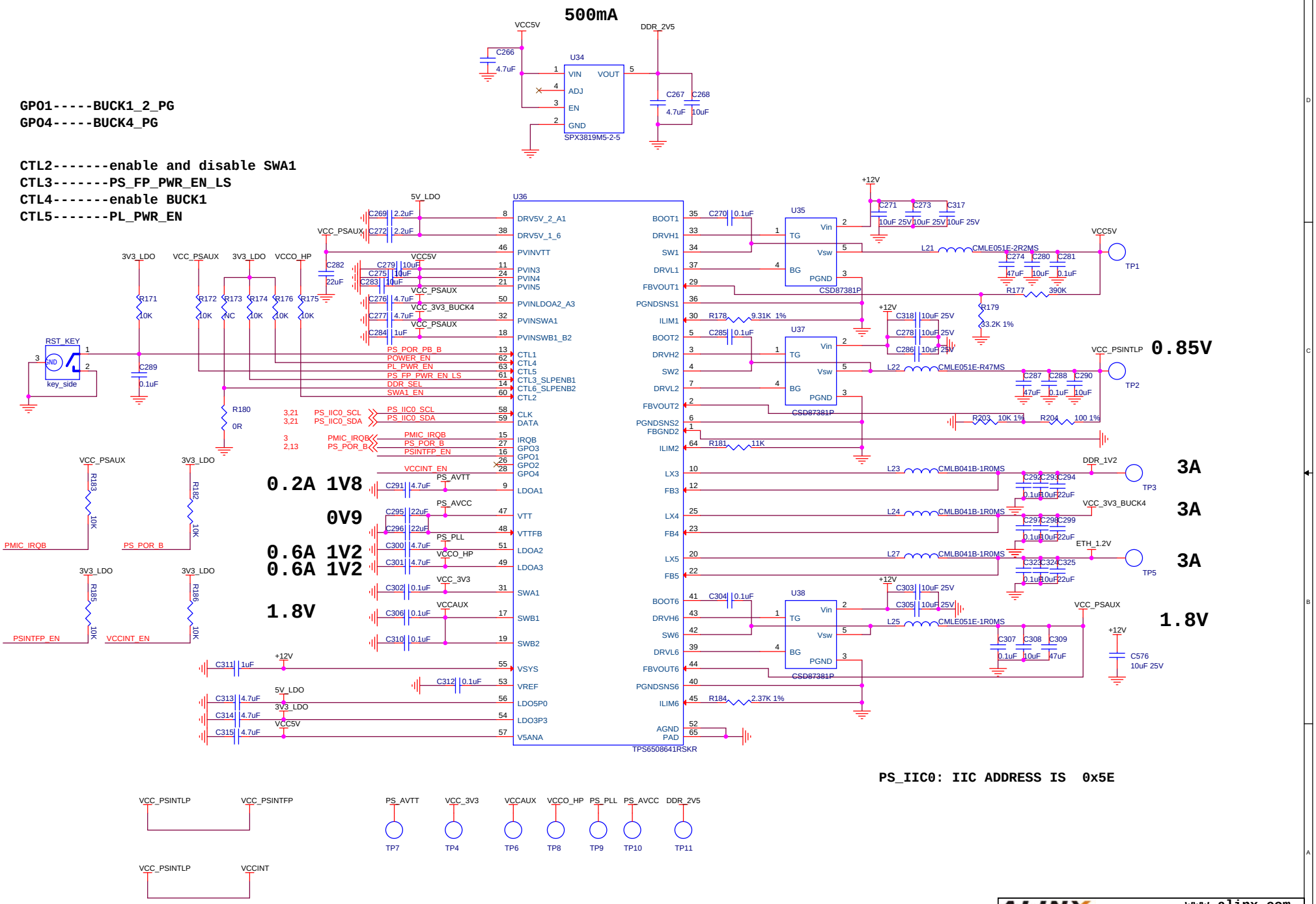

Title	PAGE22 PMIC
Size	
Document Number	EdgeBoard-lite开发板 Schematics
Rev	1.0
Date:	Monday, December 30, 2019
Sheet	22 of 23

ALINX www.alinx.com

12V/2A AC Adapter

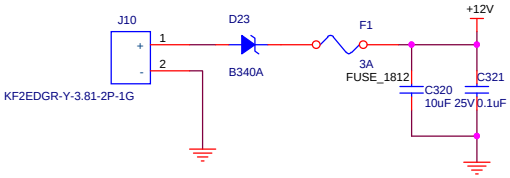

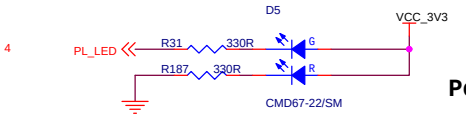

Power LED

FAN

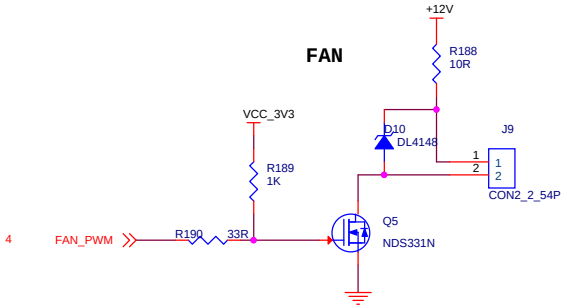

ALINX www.alinx.com		
Title: PAGE23 POWER		
Size	Document Number: EdgeBoard-lite开发板 Schematics	Rev: 1.0
Date: Monday, December 30, 2019	Sheet 23 of 23	