Introduction to Web Technology

Course Code: **CSC 3215** Course Title: WEB TECHNOLOGIES

Dept. of Computer Science
Faculty of Science and Technology

Lecturer No:	**1**	**Week No:**	**1**	**Semester:**	
Lecturer:	*Sazzad Hossain (sazzad@aiub.edu)*				

Course Logistics

Classroom and Course Policies

- **No make-up Quiz/Assignment will be taken.**
- At least 80% presence is required by the student to sit for examination. Absent classes must be defended through application and proper documentation to the department.
- Student come after 10-15 minutes of due time is considered late.
- 3 late attendances are considered as one absent.
- Late during quiz/presentation are not given additional time.

Course Logistics

Lab Work and Assignment

- Every theory class will be followed by a lab class.
- We will run and test lab work in every lab class.
- There will be an assessment in every lab.
- Every one should have **github account(version control).**
- All assignments and project(lab tasks) push in the github repositories.
- Please submit your github account in the first lab. [Google form Link]
- Deploy your application on www.heroku.com if possible.

Course Logistics

Required software and tools

- Text editor to write HTML, CSS, JavaScript, php code. E.g. Sublime Text, Note Pad ++,**VS code**, atoms, etc.
- Modern browser and server need to test them out. E.g. – google chrome(browser), **XAMMP**(apache server).
- Every one should have **github account(version control).**

Learning Objectives

- In this lecture , we will learn about Web Technology and few terminology : HTTP, HTML, XML and XHTML.
- We will learn about how web technology can help in the Business World as well.

Client/Server model

Client-Server Architecture is a fundamental model in computing where tasks or workloads are divided between two types of entities: clients and servers.

Client: is a **device** or **software** that requests services or resources from a server. Ex: Web browsers, mobile apps, email clients.

Server: is a device or software that **provides services, resources, or data** to clients. Ex: Web servers, database servers, file servers.

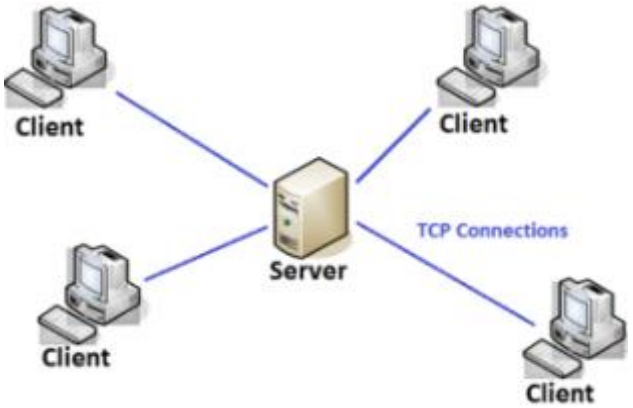

Three-tier Client Server Architecture

- The traditional client/server architecture involves two levels, a client level and a server level. Another common design of client/server systems uses three tiers:
- A client that interacts with the user
- An application server that contains the business logic of the application
- A resource manager that stores data.

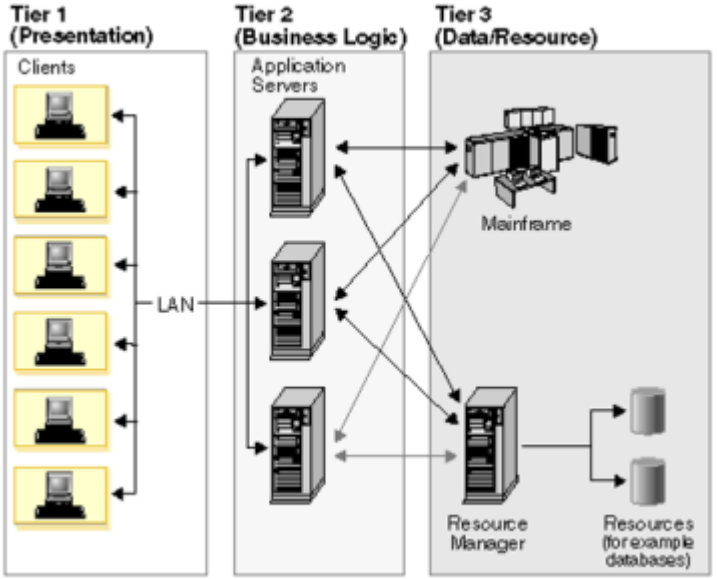

Types of Server

Types of Servers

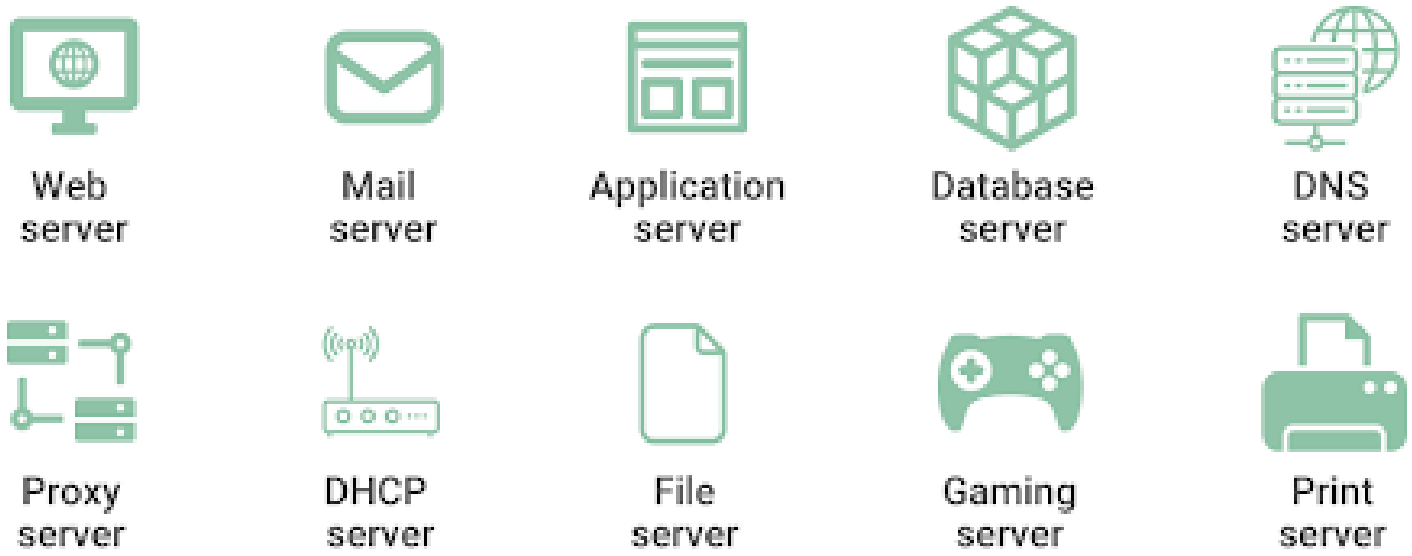

Peer to Peer (P2P)

- Distributed application architecture that partitions tasks or work loads between peers.
- Peers are equally privileged, equipotent participants in the application.
- They are said to form a peer-to-peer network of nodes.

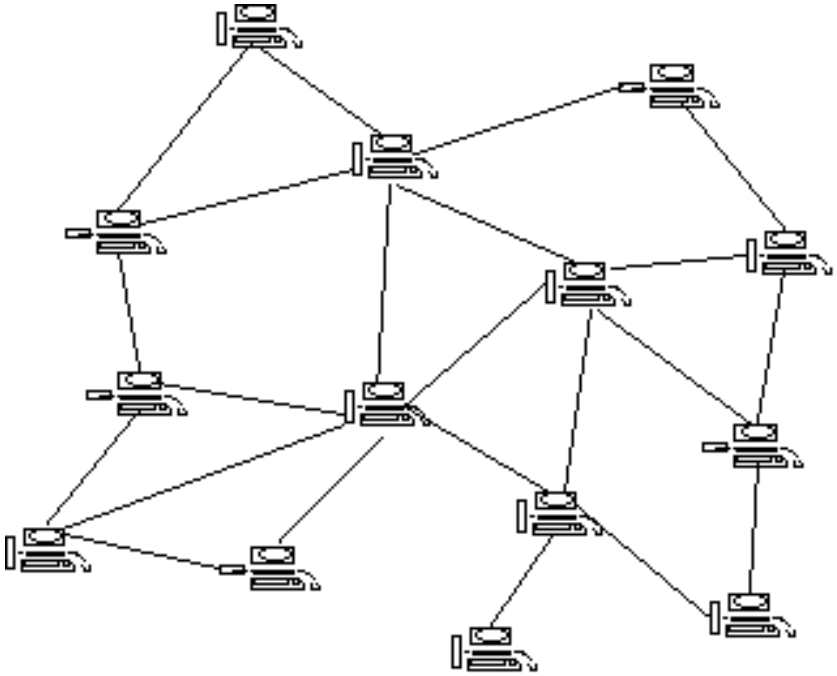

Internet

The Internet is a global network of interconnected computers and devices that communicate with each other using standardized protocols. Use the **standard Internet Protocol Suite (TCP/IP)**.

different types of networks (Based on **Size and Coverage**):

a. Personal Area Network (**PAN**): small network used for connecting devices within 10 meters. Ex: Bluetooth connections between a smartphone and a wireless headset.

b. Local Area Network (**LAN**):covers a small geographic area, such as a home, office, or building.

c. Metropolitan Area Network (**MAN**): spans a city or a large campus.

d. Wide Area Network (**WAN**):covers a large geographic area, such as a country or the entire world.

Network Address Translation (NAT)

Network Address Translation (NAT) is a technique used in networking to modify the IP address information in the headers of packets as they pass through a router or firewall.

- used to enable multiple devices on a local network to share a single public IP address for accessing the internet.
- conserve IP addresses and enhancing network security.

- Private IP Addresses: Used within a local network (e.g., home or office). These addresses are not routable on the internet. Examples: 192.168.x.x, 10.x.x.x, 172.16.x.x.

- Public IP Addresses: Used on the internet and assigned by Internet Service Providers (ISPs).

Network Address Translation (NAT)

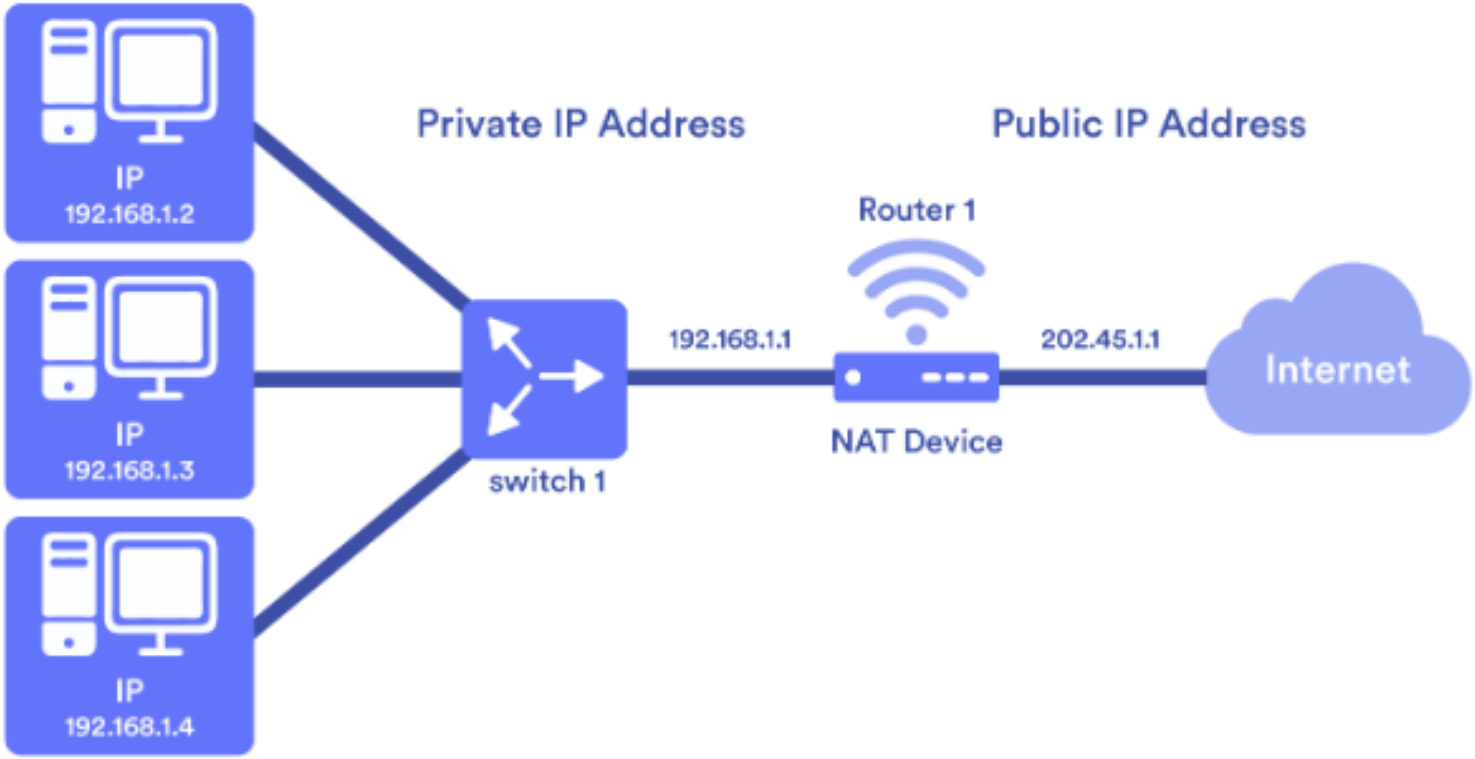

Domain Name System

DNS stands for Domain Name System, which is a system that translates **domain names** into **IP addresses**. This allows users to access websites and other internet resources by entering domain names like "www.google.com" instead of IP addresses. DNS is like the phone book of the web, organizing and identifying domains.

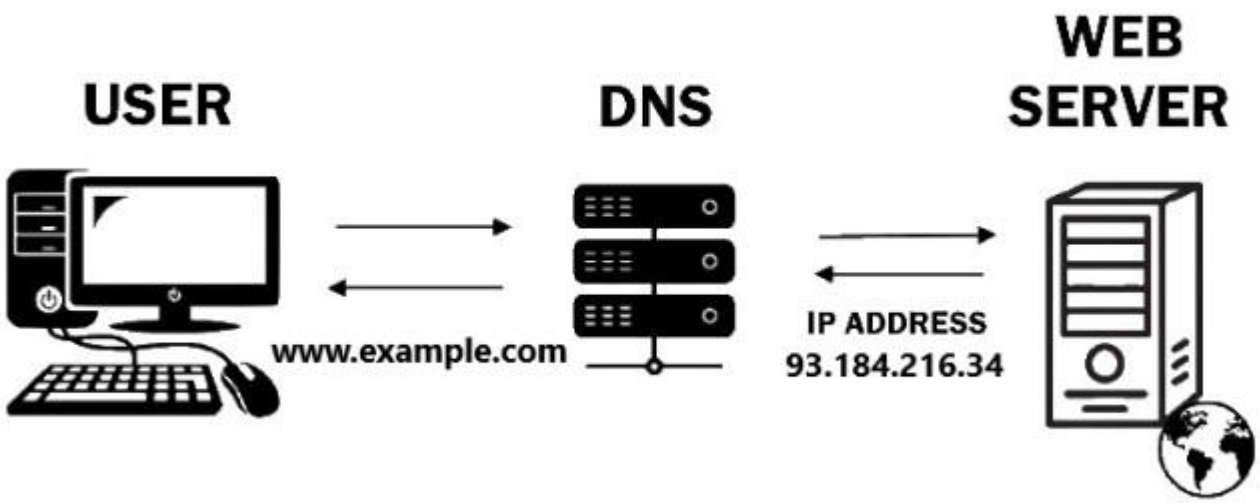

World Wide Web

- commonly referred to as the Web, is a system of **interlinked hypertext documents** and **multimedia** content that can be **accessed over the Internet**. It was invented by Tim Berners-Lee in 1989 and has since become the most widely used service on the Internet.

Decade	Key Developments
1960s	Development of **ARPANET**
1980s	Proposal of the World Wide Web by Tim Berners-Lee
1990s	Launch of the first web browser and server
2000s	Dot-com boom, emergence of social media
2010s	Rise of mobile technology, advent of IoT
2020s	Continued innovation and evolution

WWW standards

- Many of the documents are the work of the World Wide Web Consortium **(W3C).**
- Some of the documents are produced by the Internet Engineering Task Force **(IETF)** and other organizations.
- markup languages, especially HTML and XHTML, from the W3C
  - define the structure and interpretation of hypertext documents
- **ECMAScript** (usually in the form of JavaScript), from Ecma International.
- **Document Object Model**, from W3C.
- **HyperText Transfer Protocol (HTTP)**- how the browser and server authenticate each other.
- **Uniform Resource Identifier (URI)**- a universal system for referencing resources on the Internet, such as hypertext documents and images.

Uniform Resource Identifier (Example)

http://en.wikipedia.org:80/wiki/URI?page=2&frame=1#Examples_of_URI_references

- "http" specifies the 'scheme' name
- "en.wikipedia.org" is the 'authority‘
- “80” is the port address
- "/wiki/URI" the 'path' pointing to this article
- “page=2&frame=1” is the query
- "#Examples _of_URI_references " is a 'fragment’ or anchor pointing to this section

URI, URL, and URN

URI (Uniform Resource Identifier):is a string of characters used to identify a resource on the Internet. It is a broad term that **encompasses both URLs and URNs.** Ex. https://www.example.com/path/to/resource?query=value#section

URL (Uniform Resource Locator): specifies the location of a resource on the Internet and the protocol used to access it. Ex. https://www.example.com/index.html

URN (Uniform Resource Name): type of URI that provides a unique and persistent name for a resource, but **does not specify its location** or how to access it. Ex. urn:isbn:0451450523

Browsers

- A web browser or Internet browser is a software application for retrieving, presenting, and traversing information resources on the World Wide Web. An information resource is identified by a **Uniform Resource Identifier (URI)** and may be a web page, image, video, or other piece of content.
  - e.g. Internet Explorer, Netscape, Mozilla Firefox, Opera, Google Chrome, Apple Safari

HTTP protocol

Process of http

- An HTTP client sends a request message to an HTTP server. The server, in turn, returns a response message

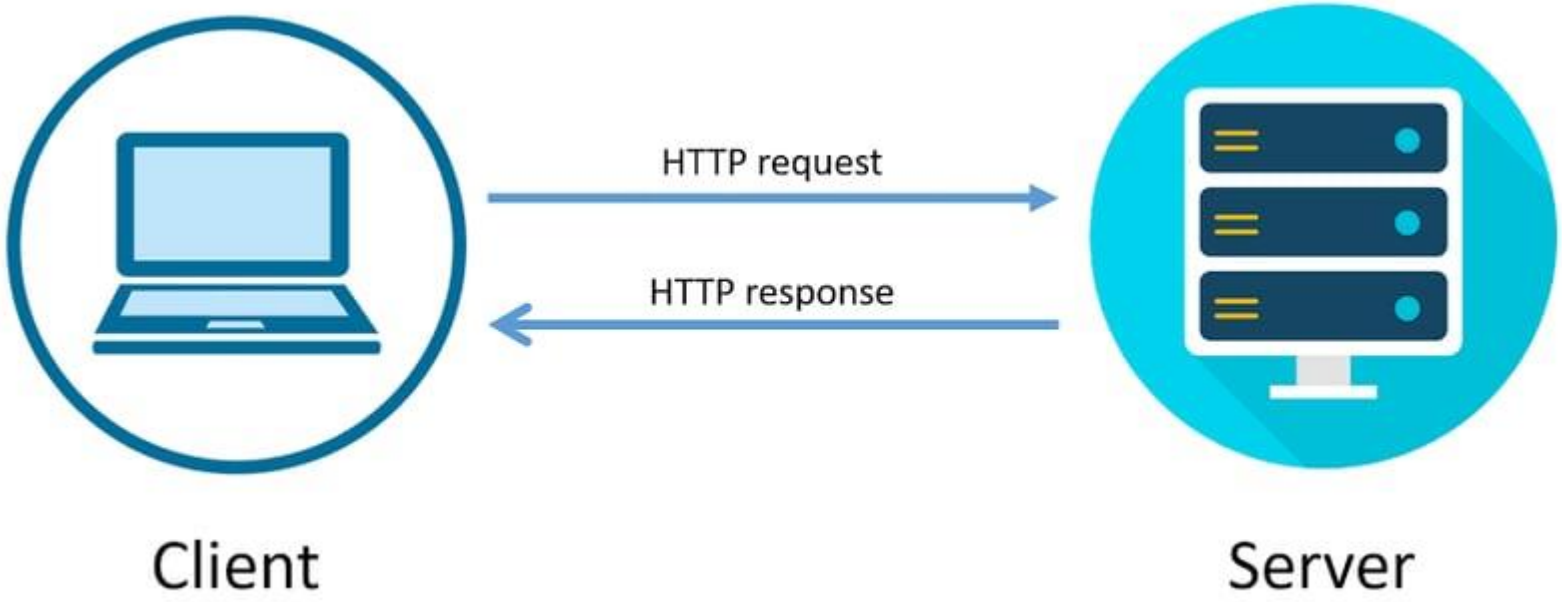

HTTP protocol

- HTTP stands for Hyper Text Transfer Protocol. Default http port is 80.
- Communication between client and web servers is done by sending http Requests and receiving http Responses.
- **http is Connectionless** because after the connection is closed, the server does not remember anything about the client and the client does not remember anything about the server.
- **http is stateless** because both client and server do not expect anything from each other but they are still able to communicate.

HTTP protocol

http Steps

- Whenever you issue a URL from your browser to get a web resource using HTTP, e.g. http://www.abc.com/index.html, the browser turns the URL into a request message and sends it to the HTTP server.

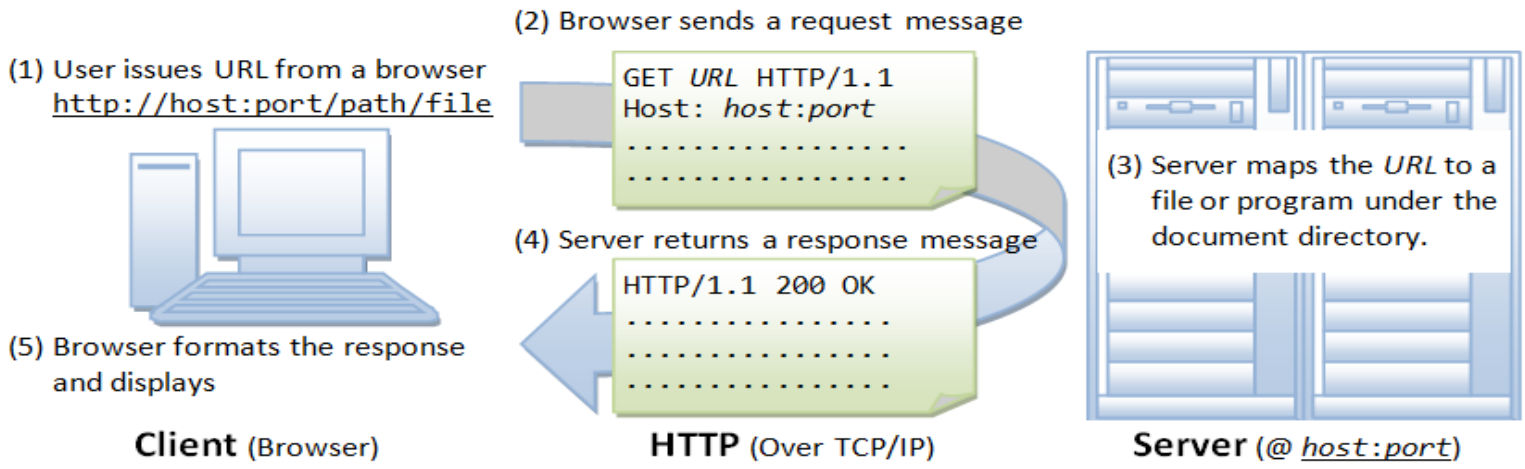

HTTP protocol

http Steps(continue)

- The HTTP server interprets the request message, and returns you an appropriate response message, which is either the resource you requested or an error message.
- A URL (Uniform Resource Locator) is used to uniquely identify a resource over the web. URL has the following syntax:
  protocol://hostname:port/path-and-file-name
- As mentioned, whenever you enter a URL in the address box of the browser, the browser translates the URL into a request message according to the specified protocol; and sends the request message to the server.

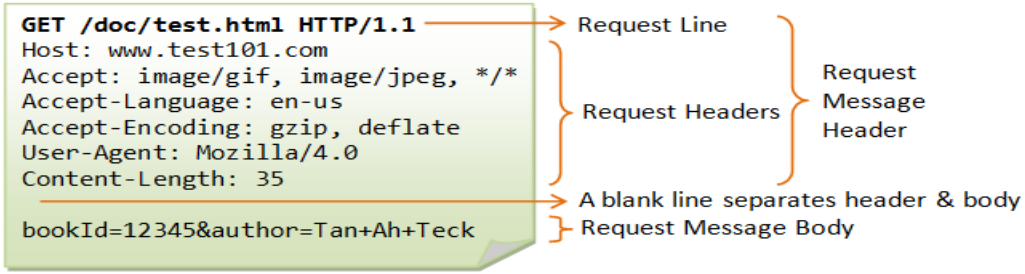

HTTP protocol

http Steps(continue)

- The server interprets the request received, maps the request into a file under the server's document directory, and returns the file requested to the client. Or
- The server interprets the request received, maps the request into a program kept in the server, executes the program, and returns the output of the program to the client. If the request not be satisfied, server returns an error message.

```
HTTP/1.1 200 OK
Date: Sun, 08 Feb xxxx 01:11:12 GMT
Server: Apache/1.3.29 (Win32)
Last-Modified: Sat, 07 Feb xxxx
ETag: "0-23-4024c3a5"
Accept-Ranges: bytes
Content-Length: 35
Connection: close
Content-Type: text/html

<h1>My Home page</h1>
```

Status Line

Response Headers

Response Message Header

A blank line separates header & body

Response Message Body

HTTP Response Message

The type of response messages:

- 1xx: Informational response
- 2xx: Success
- 3xx: Redirection
- 4xx: Client error
- 5xx: Server error

Status Code	Status Text	Meaning
200	OK	The request was successful and the response body contains the data.
201	Created	The request was successful and a new resource was created.
400	Bad Request	The server could not understand the request due to invalid syntax.
401	Unauthorized	The request requires user authentication.
404	Not Found	The server could not find the requested resource.
500	Internal Server Error	The server encountered an unexpected error.

HTTP protocol

HTTP Request Methods

GET: A client can use the GET request to get a web resource from the server.

POST: Used to post data up to the web server. HTML form uses POST request.

PUT: Ask the server to store the data.

DELETE: Ask the server to delete the data.

HTTP Vs HTTPs

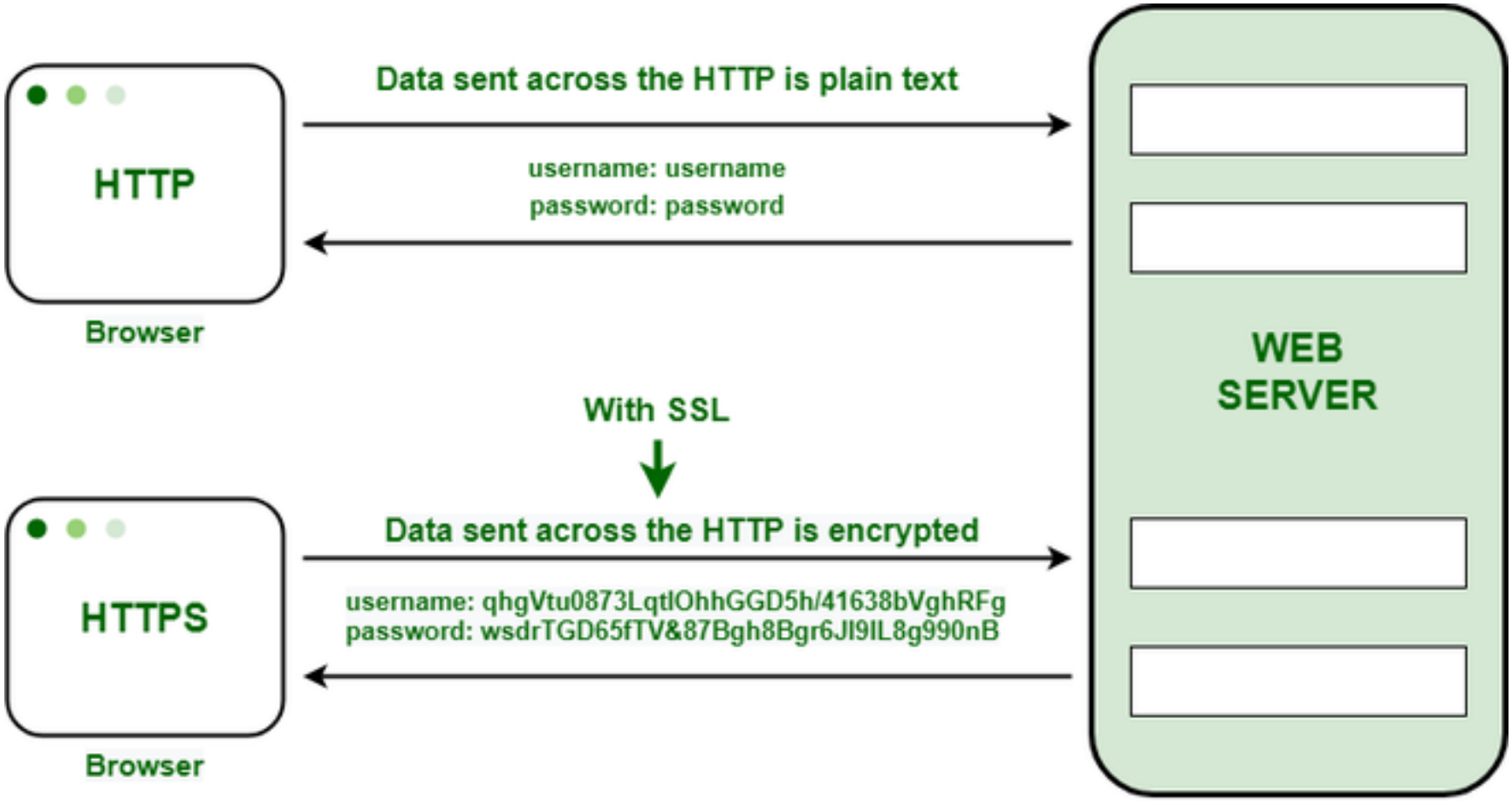

References

1. https://developer.mozilla.org/enUS/docs/Web/HTTP/Status
2. https://www.w3schools.com/html/html_intro.asp
3. https://www.w3schools.com/html/html_xhtml.asp