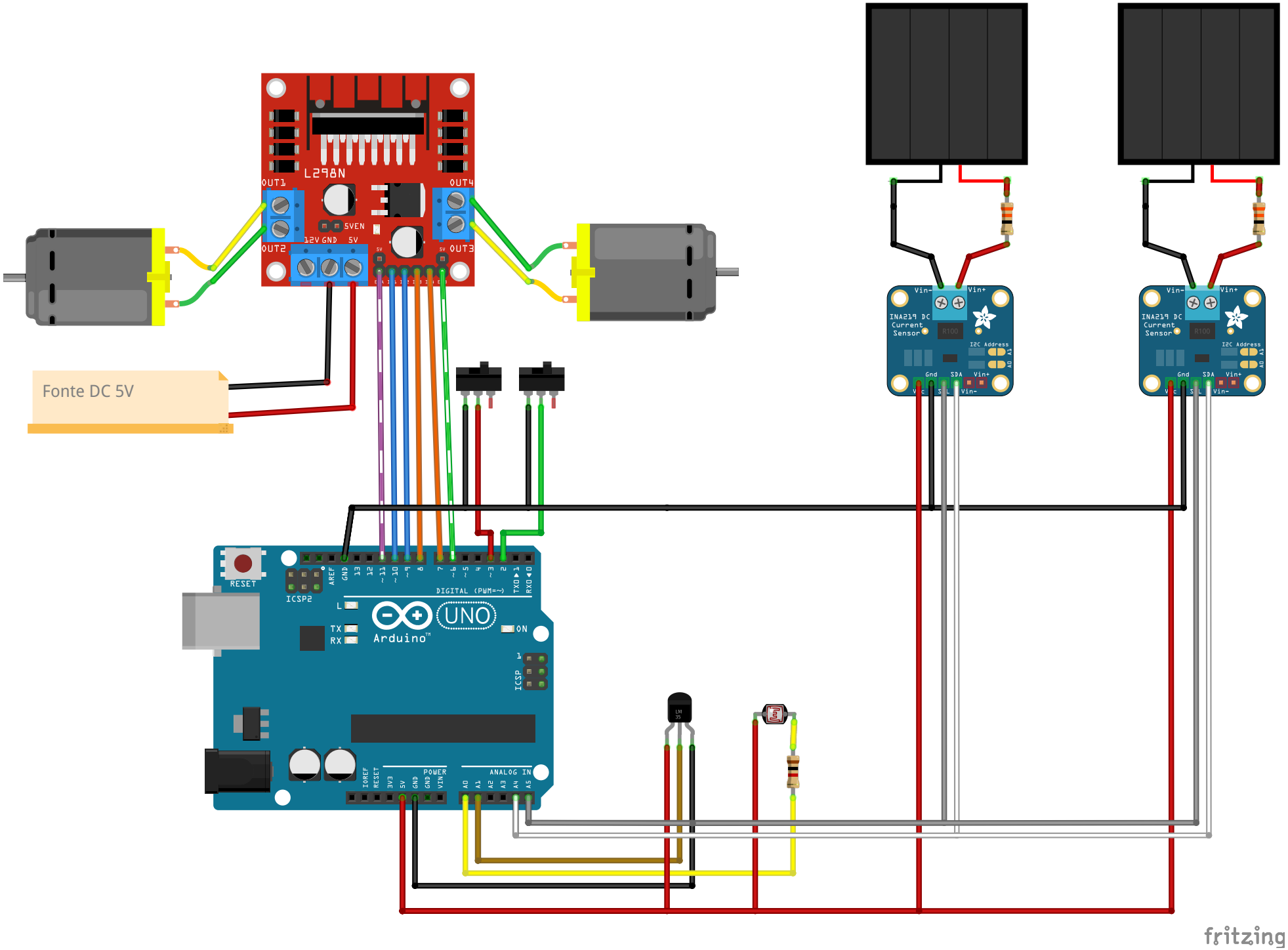
L298N
OUT1
OUT2
OUT3
OUT4
5VEN
12V GND 5V
Fonte DC 5V
INA219 DC Current Sensor
Vin-
Vin+
Gnd
SDA
I2C Address
UNO
Arduino
RESET
ICSP2
DIGITAL (PWM=~)
POWER
ANALOG IN
ICSP
fritzing