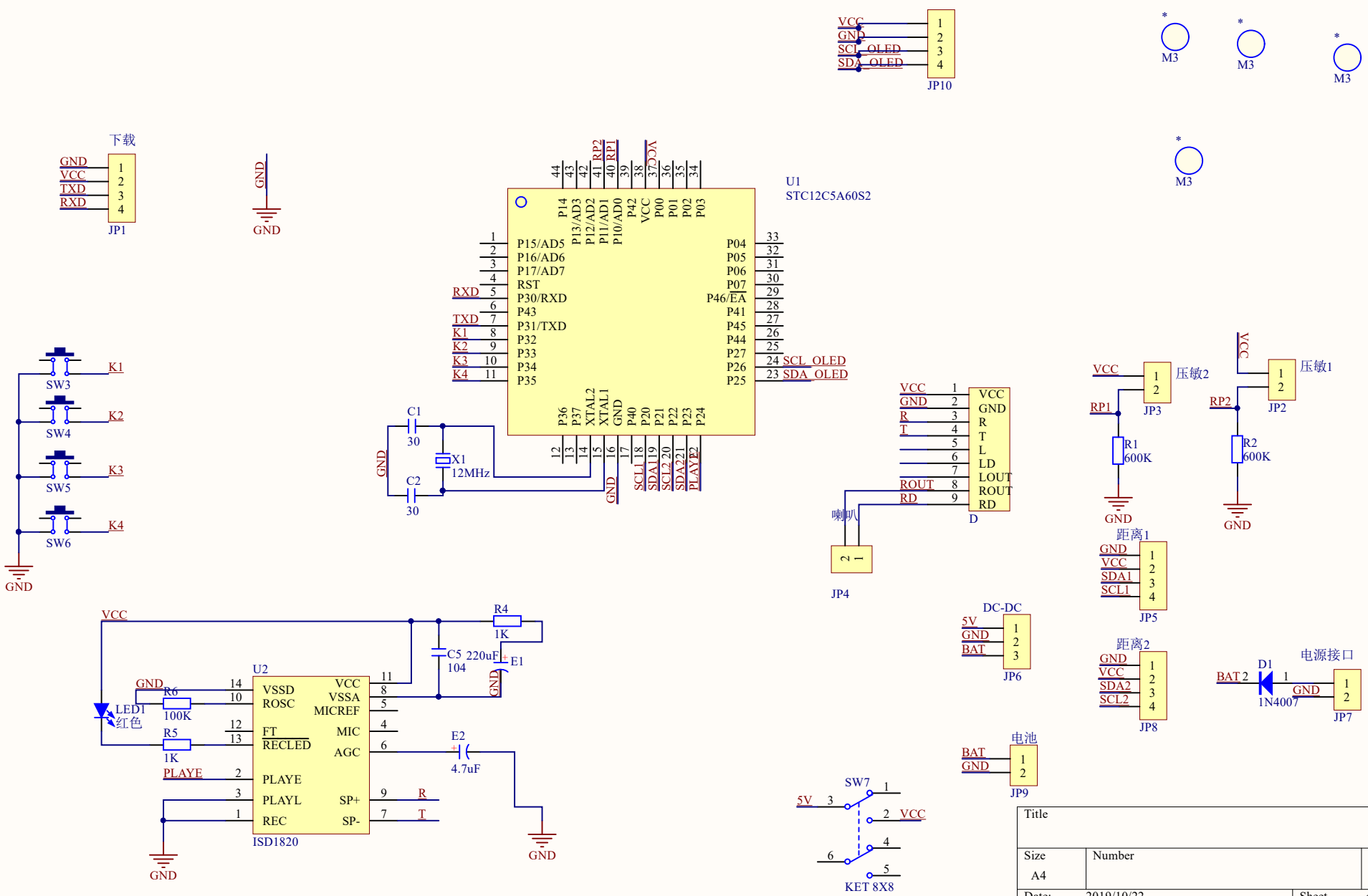

Title		
Size A4	Number	Revision
Date: 2019/10/22	Sheet of	
File: C:\Users\..\Sheet1.SchDoc	Drawn By:	