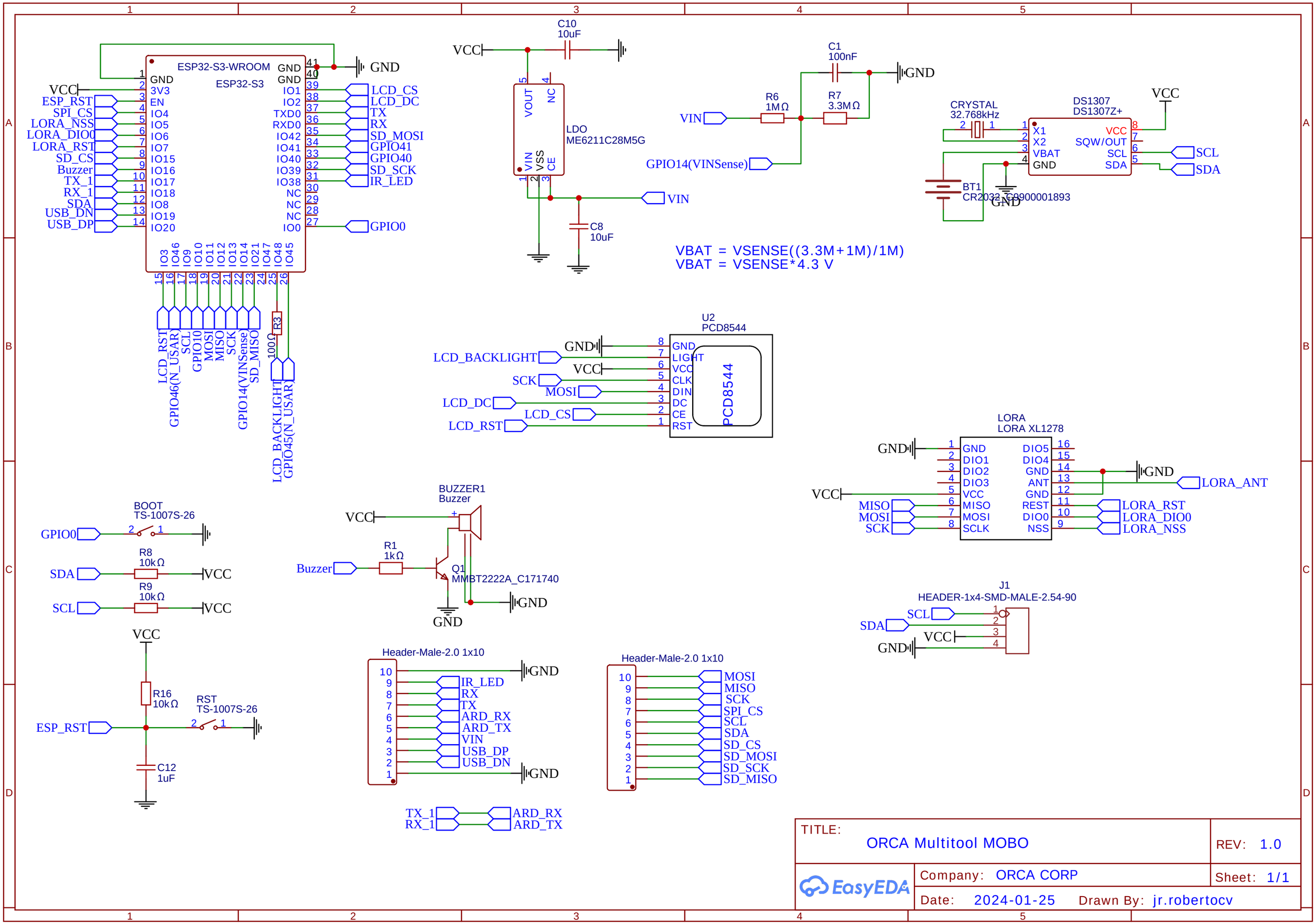
ESP32-S3-WROOM
ESP32-S3
GND
3V3
EN
IO4
IO5
IO6
IO7
IO15
IO16
IO17
IO18
IO8
IO19
IO20
IO1
IO2
TXD0
RXD0
IO42
IO41
IO40
IO39
IO38
NC
IO0
VCC
ESP_RST
SPI_CS
LORA_NSS
LORA_DIO0
LORA_RST
SD_CS
Buzzer
TX_1
RX_1
SDA
USB_DN
USB_DP
LCD_CS
LCD_DC
TX
RX
SD_MOSI
GPIO41
GPIO40
SD_SCK
IR_LED
GPIO0
LCD_RST
GPIO46(N_USAR)
SCL
GPIO10
MOSI
MISO
SCK
GPIO14(VINSense)
SD_MISO
LCD_BACKLIGHT
GPIO45(N_USAR)
R3
100Ω
C10
10uF
LDO
ME6211C28M5G
VOUT
NC
VIN
VSS
CE
C8
10uF
C1
100nF
R6
1MΩ
R7
3.3MΩ
GPIO14(VINSense)
VBAT = VSENSE((3.3M+1M)/1M)
VBAT = VSENSE*4.3 V
CRYSTAL
32.768kHz
DS1307
DS1307Z+
X1
X2
VBAT
VCC
SQW/OUT
SCL
SDA
BT1
CR2032_C9900001893
U2
PCD8544
LIGHT
CLK
DIN
DC
CE
RST
LORA
LORA XL1278
DIO1
DIO2
DIO3
DIO5
DIO4
ANT
REST
DIO0
NSS
MISO
MOSI
SCK
SCLK
LORA_ANT
LORA_RST
LORA_DIO0
LORA_NSS
BOOT
TS-1007S-26
R8
10kΩ
R9
10kΩ
BUZZER1
Buzzer
R1
1kΩ
Q1
MMBT2222A_C171740
J1
HEADER-1x4-SMD-MALE-2.54-90
R16
10kΩ
RST
TS-1007S-26
C12
1uF
Header-Male-2.0 1x10
IR_LED
RX
TX
ARD_RX
ARD_TX
VIN
USB_DP
USB_DN
MOSI
MISO
SCK
SPI_CS
SCL
SDA
SD_CS
SD_MOSI
SD_SCK
SD_MISO
TITLE:
ORCA Multitool MOBO
REV: 1.0
Company: ORCA CORP
Sheet: 1/1
Date: 2024-01-25
Drawn By: jr.robertocv
EasyEDA