(SC) SPECIFIC CRITERIA (CC) CRITICAL CRITERIA (A) APPEARANCE/ ITEM

REV	ECN / ECR NO	DESCRIPTION	DATE	APPD
A		PRODUCTION RELEASE	26/07/2022	ROHAN
B	PCI-12894	SOLIDWORKS TO NX MIGRATION	26/07/2022	NARENDRAN

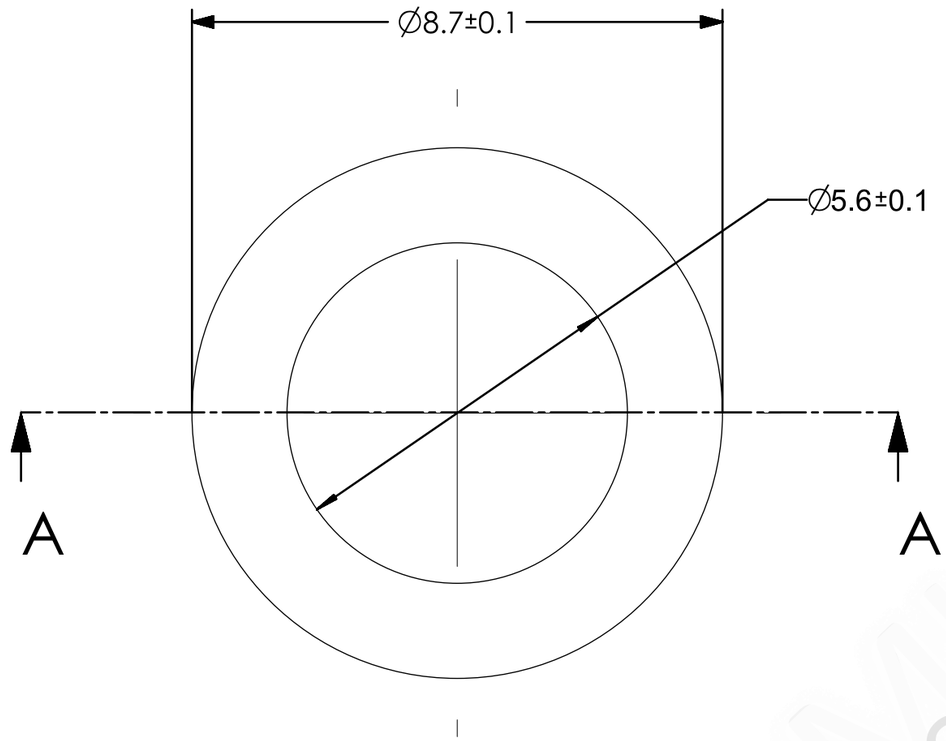

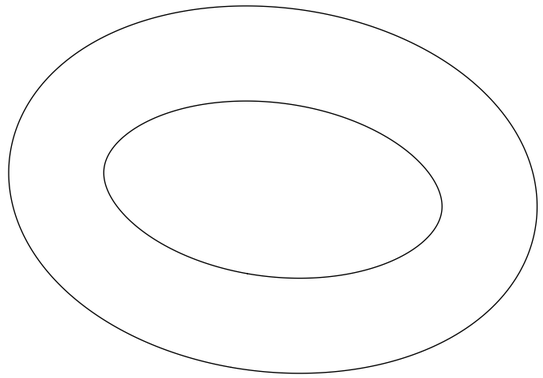

SECTION A-A
SCALE 10:1

Converted To NX

NOTES

1. REFER 3D CAD FOR ADDITIONAL DIMENSIONS.
2. MAXIMUM ALLOWABLE FLASH LEVEL 0.10mm.
3. HARDNESS 40- 50 SHORE A ASTM D 2240.
4. COMPRESSION SET 20 TO 30% ASTM D 395.
5. WORKING TEMPERATURE : -10 TO 105 C.
6. INSULATION RESISTANCE : 3kV per mm min.
7. PPAP MUST BE SUBMITTED TO ATHER APPROVAL BEFORE SOP.
8. PART SHOULD BE FREE FROM CARBON AND GRAPHITE CONTENT.
9. ELECTRICAL CONDUCTIVITY TO BE VARIFIED IN EVERY BATCH ON SAMPLING BASIS.

THIS DRAWING IS PROPERTY OF ATHER ENERGY PVT LTD. UNAUTHORISED REPRODUCTION IN WHOLE OR IN PART IS PROHIBITED.

ATHER

Tolerances and acceptance conditions for dimensions
Refer ISO 3302-1

MATERIAL:	UNIT:	HEAT TREATMENT:	FINISH:
SILICON RED COLOR1940 BLUE STAR OREQUIVALENT RAL3026	MM	NA	NA

	NAME	DATE
DRAFT	RANJEET	26/07/2022
ENGG	CHETAN	26/07/2022
NPD	CHETAN	26/07/2022
APPD	ROHAN	26/07/2022

THIRD ANGLE PROJECTION

PROJECT: PC 1.5

TITLE: O RING FOR CHARGING HANDLE AC AND DC CONTACTS

DRAWING NO: BE5101A015ANN

REV NO: B

SHEET 1 OF 1 | SCALE 10:1 | WEIGHT (Kg): 0.0001 | SIZE: A3

DATUM A	
DATUM B	
DATUM C	
(SC)	
(CC)	
(A)	