SC SPECIFIC CRITERIA CC CRITICAL CRITERIA A APPEARANCE/ ITEM

REV	ECN / ECR NO	DESCRIPTION	DATE	APPD

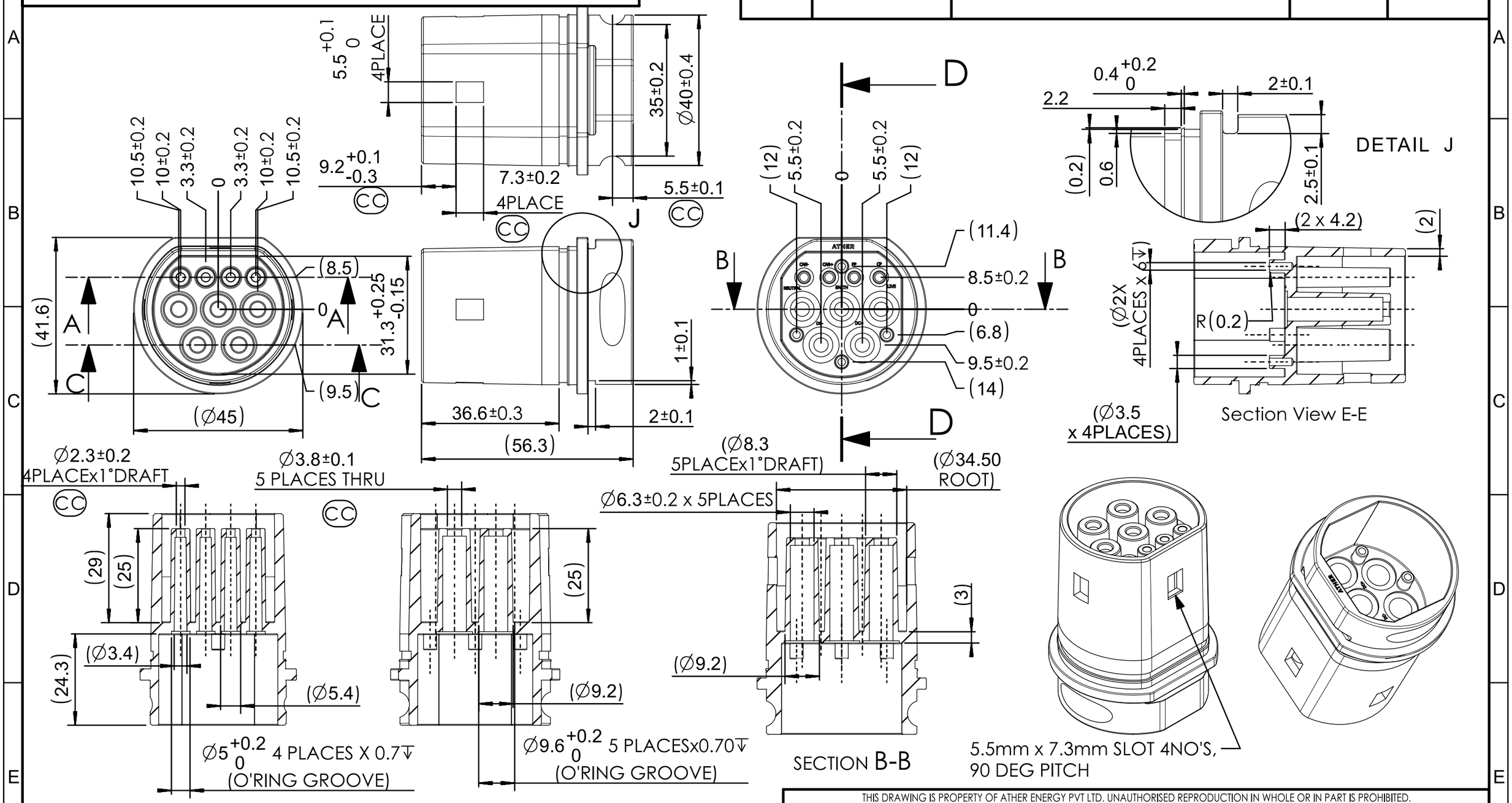

DATUM A	
DATUM B	
DATUM C	
SC	
CC	
A	

THIS DRAWING IS PROPERTY OF ATHER ENERGY PVT LTD. UNAUTHORISED REPRODUCTION IN WHOLE OR IN PART IS PROHIBITED.

ATHER

FORM AND GENERAL TOLERANCE AS PER DIN EN ISO 2768.

DIM\.CLASS	f(fine)	m(medium)
0.5-3	±0.05	±0.1
3-6	±0.05	±0.1
6-30	±0.1	±0.2
30-120	±0.15	±0.3
120-400	±0.2	±0.5
400-1000	±0.3	±0.8

MATERIAL: PA66 (DOMAMID FA66 6V0M/EQUIVALENT) UL94-V0 GRADE, BLACK COLOR

UNIT: MM

HEAT TREATMENT: NA

FINISH: MATTE

	NAME	DATE
DRAFT	MAHARAJA	29-08-2023
ENGG	ROHAN	29-08-2023
NPD	CHETAN	29-08-2023
APPD	ROHAN	29-08-2023

THIRD ANGLE PROJECTION

PROJECT: 450X

TITLE: CHARGING HANDLE MAIN HOUSING (100A)

DRAWING NO: PB00000652

REV NO: 01

SHEET 1 OF 2 | SCALE 1:1 | WEIGHT (Kg): | SIZE: A3

A3

SC SPECIFIC CRITERIA CC CRITICAL CRITERIA A APPEARANCE/ ITEM

REV	ECN / ECR NO	DESCRIPTION	DATE	APPD
B		SW TO NX CONVERSION	05-06-2023	-
C	PCI-14099	For New development refer Rev B, Plactic Part Dimension Update	29-08-2023	ROHAN

NOTES :

1) THE 3D GENERATED MATHEMATICAL DATA IS MASTER FOR THE PART.
2) ALL SHARP EDGES AND CORNERS SHALL BE JOINED WITH FILLETS.
3) MAXIMUM FLASH OF 0.05 mm ALLOWED ON SLIDES AND PARTING LINE.
4) PART MUST BE FREE FROM VISUAL DEFECTS FLOW MARKS, WARPAGE, ANY SURFACE IMPERFECTIONS, FRACTURE, SHARP EDGES.
5) POSITION, TYPE OF GATE, LOCATION OF EJECTORS MUST BE APPROVED BY ATHER.
6) DIMENSION TOLERANCE -AS PER DIN 16901
7) SUPPLIER NAME/LOGO NOT ALLOWED ON THE PART
8) PART WARPAGE AND GATE POSITION SHALL BE OPTIMIZED USING MOLD FLOW
9) PART SHALL PASS THE TEST AS PER ATHER STD: AE PVL STDS 10 & AE PVL STDS 19 & AE QA TS 003.
10) RECEIVER GAUGE SHALL BE USED TO CHECK FIT & FUNCTION DIMENSION FITMENT & WARPAGE
11) PARTS TO BE CHECKED WITH GAUGES AS PER SAMPLING PLAN

DATUM A	
DATUM B	
DATUM C	
SC	
CC	
A	

THIS DRAWING IS PROPERTY OF ATHER ENERGY PVT LTD. UNAUTHORISED REPRODUCTION IN WHOLE OR IN PART IS PROHIBITED.

ATHER

FORM AND GENERAL TOLERANCE AS PER DIN EN ISO 2768.

DIM\.CLASS	f(fine)	m(medium)
0.5-3	±0.05	±0.1
3-6	±0.05	±0.1
6-30	±0.1	±0.2
30-120	±0.15	±0.3
120-400	±0.2	±0.5
400-1000	±0.3	±0.8

MATERIAL: PA66 (DOMAMID FA66 6V0M/EQUIVALENT) UL94-V0 GRADE, BLACK COLOR

UNIT: MM

HEAT TREATMENT: NA

FINISH: MATTE

	NAME	DATE
DRAFT	MAHARAJA	29-08-2023
ENGG	ROHAN	29-08-2023
NPD	CHETAN	29-08-2023
APPD	ROHAN	29-08-2023

THIRD ANGLE PROJECTION

PROJECT: 450X

TITLE: CHARGING HANDLE MAIN HOUSING (100A)

DRAWING NO: PB00000652

REV NO: 01

SHEET 2 OF 2 | SCALE 1:1 | WEIGHT (Kg): | SIZE: A3

A3