(SC) SPECIFIC CRITERIA (CC) CRITICAL CRITERIA (A) APPEARANCE/ ITEM

REV	ECN / ECR NO	DESCRIPTION	DATE	APPD
A	--	PRODUCTION RELEASE	05-02-2020	JASPREET

DESC : INSULATION CAP FOR DC TERMINALS OF VEHICLE INLET CONNECTOR

Part No. 12D501BK-01 REV. A

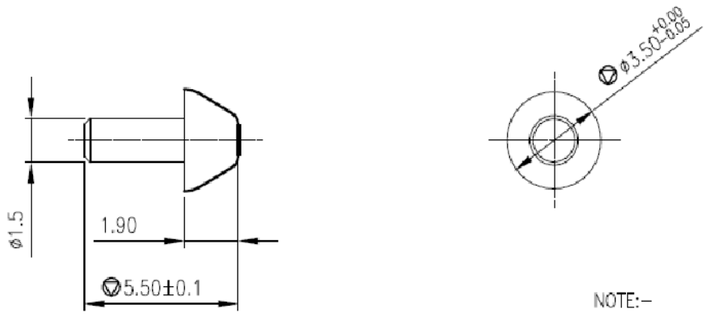

NOTE:-

1. MOULDED COMPONENT SHALL BE FREE FROM FLASH, SHRINKAGE AND DENT MARKS.
2. CRITICAL DIMENSIONS.
3. COMPONENT SHALL BE FREE FROM SCORING MARKS.
4. COMPONENT SHALL BE FREE FROM GATE POINT MARKS.

REV.	ZONE	DESCRIPTION	DRG REV BY	DATE
A		ORIGINAL		14.09.2018

DOCUMENT CODE : 4D 12D501 01

ALL DIMENSIONS ARE IN MM. IF UNLESS OTHERWISE SPECIFIED.

MATERIAL & FINISH: PA 66+25% GF FR0057E BLACK COLOR

HEAT TREATMENT

ENGG APP'D :

DRAWN BY : AKSHAY

DATE : 14.09.2018

APP'D BY:

Gen. Tol. ±0.1mm ±0.2°

Surface Finish 1.6 Ra

Scale: 5 : 1

Sht. Size: A4

PROTECTRON ELECTROMECH (P) LTD. Bangalore, INDIA.

This Document is the property of PROTECTRON ELECTROMECH (P) LTD. It shall not be reproduced or communicated to a third party without prior permission.

DWG according to STD. Sheet: 1 OF 1

DATUM A	
DATUM B	
DATUM C	
(SC)	
(CC)	
(A)	

THIS DRAWING IS PROPERTY OF ATHER ENERGY PVT LTD. UNAUTHORISED REPRODUCTION IN WHOLE OR IN PART IS PROHIBITED.

ATHER

FORM AND GENERAL TOLERANCE AS PER DIN EN ISO 2768.

DIM\.CLASS	f(fine)	m(medium)
0.5-3	±0.05	±0.1
3-6	±0.05	±0.1
6-30	±0.1	±0.2
30-120	±0.15	±0.3
120-400	±0.2	±0.5
400-1000	±0.3	±0.8

MATERIAL: NA

UNIT: mm

HEAT TREATMENT: NA

FINISH: NA

	NAME	DATE
DRAFT	BABU	05-02-2020
ENGG	OMKAR	05-02-2020
NPD	SUDHAKAR	05-02-2020
APPD	JASPREET	05-02-2020

THIRD ANGLE PROJECTION

PROJECT: 450 GEN2

TITLE: INSULATION CAP DC TERMINAL VEHICLE INLET

DRAWING NO: 340A0018019

REV NO: A

SHEET 1 OF 1

SCALE:

WEIGHT (Kg): --

SIZE: A3