REV NO	ECN NO	REVISION RECORD	CH BY	CK BY	DATE
A	-	NEW RELEASE	RP	DY	09.09.22
B	-	DIMENSION 7.8±0.1,3.8±0.05,5.25±0.2,7.25±0.1,19.5±0.2, 3.25±0.1 HAS BEEN ADDED;DIMENSION (7.75)CHANGED TO 7.7±0.1; MANUAL OVERRIDE-PUSH PULL FORCE,MANUAL OVERRIDE-CABLE PULL OFF LOAD,TERMINAL CRIMP,GREASE NOTED ADDED	RP	DY	13.01.23
C	-	GREASE CHANGED FROM KR-44-32 BH TO LI-41-32 BH,NOTE (14) ADDED, INNER CHANGED FROM COM-CCI-00022 TO COM-CCI-00092, RUBBER WASHER(COM-WAS-00452) ADDED	RP	DY	29.03.23
D	-	WEDGE PLUNGER STROKE TOLERANCE UPDATED LOCKED CONDITION: CHANGED FROM 12.5(+0.3/-0.2) TO 12.5±0.5 UNLOCKED CONDITION: CHANGED FROM 7.5(+0.3/-0.2) TO 7.5±0.5	GS	DY	09.05.23

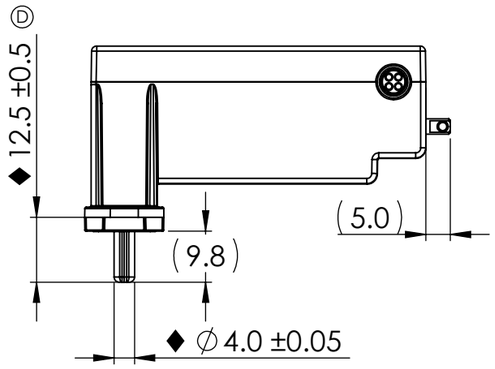

LOCKED CONDITION

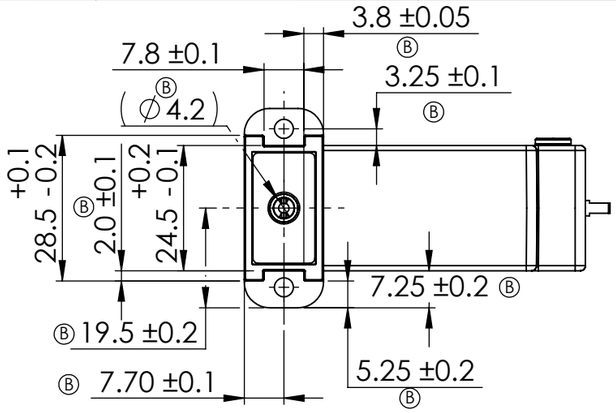

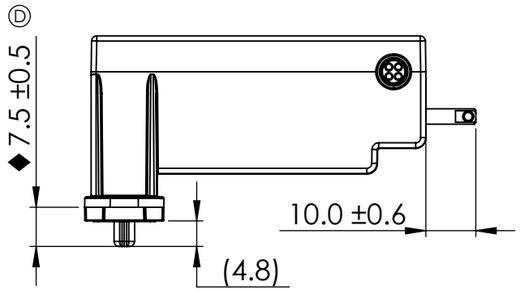

UNLOCKED CONDITION

FEEDBACK SWITCH STATE,
CONTACT OPEN

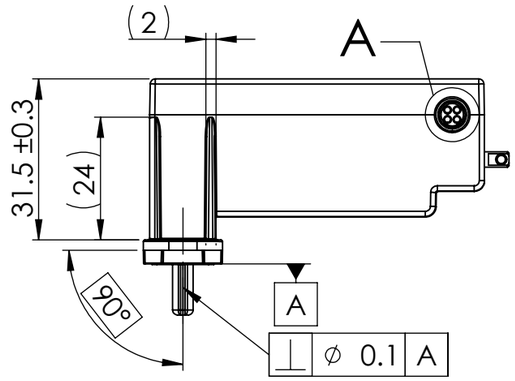

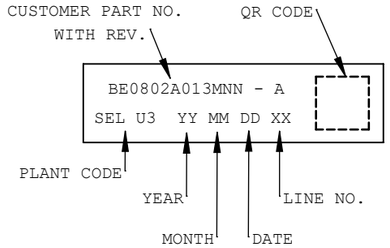

IDENTIFICATION TAG
(TAG COLOR WHITE AND TEXT COLOR BLACK)
TO BE PASTED
OVER PVC SLEEVE

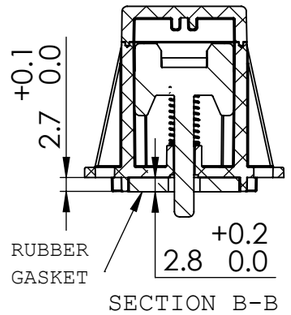

SECTION B-B

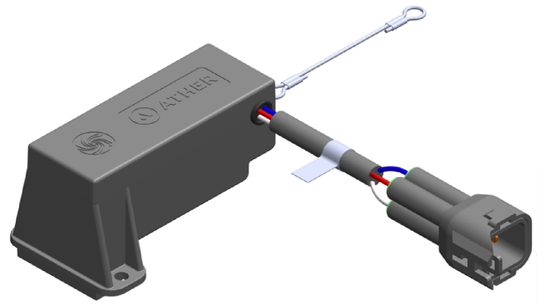

ISOMETRIC VIEW

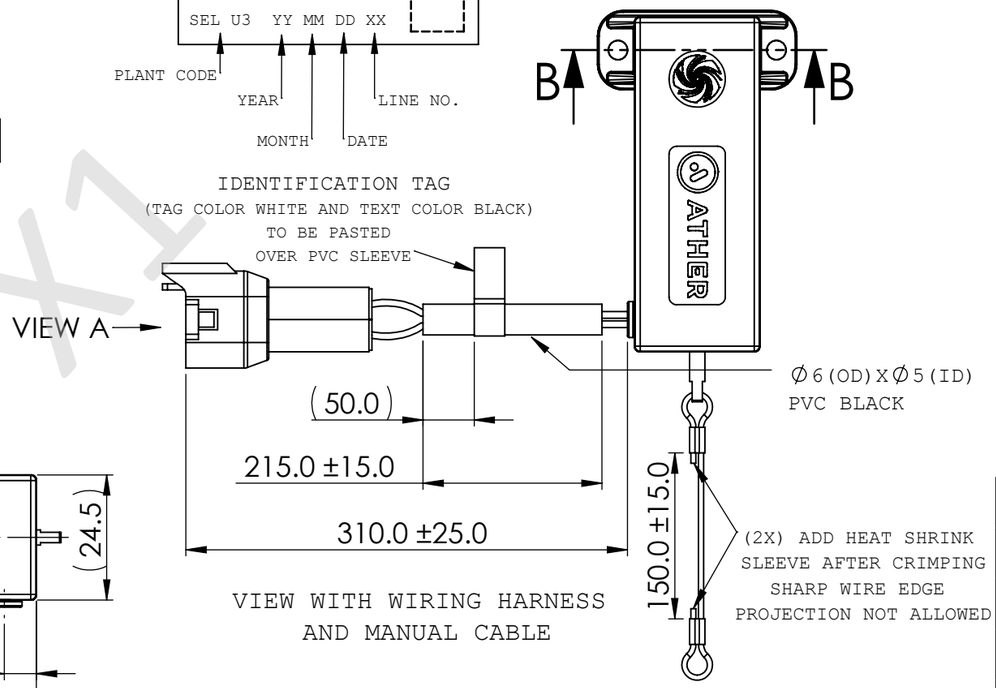

VIEW WITH WIRING HARNESS
AND MANUAL CABLE

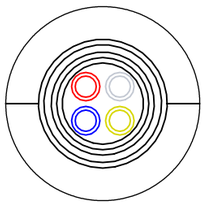

DETAIL A

VIEW A

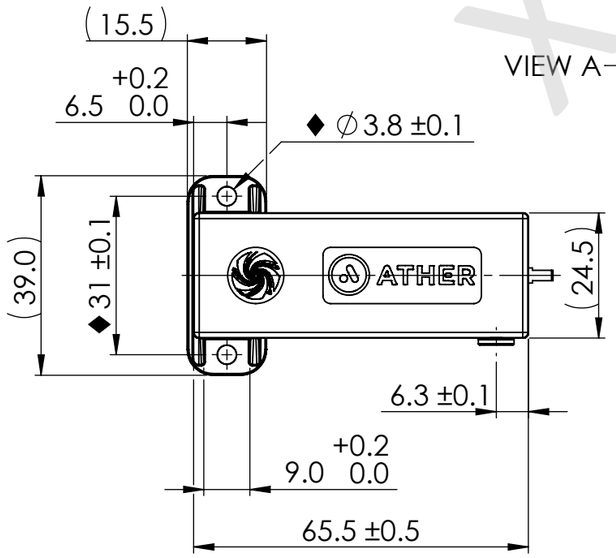

ELECTRICAL SPECIFICATION :

	SOLENOID COIL		MICRO SWITCH	
WIRE	RED	WHITE	BLUE	YELLOW
CONNECTOR PIN NO	1	2	3	4
LOCKING	+12V	0V	+3.3V	
UNLOCKING	0V	+12V	0V	
MAX CURRENT	3A (LOCKING) 0A(CONTINUOUS)		0.1A	

NOTES:
◆ CRITICAL FOR FUNCTION

PART NAME: SOLENOID ACTUATOR ASSY	
MATERIAL & GRADE: REFER BOM	
FINISH: REFER BOM	
USED ON: SOLENOID GEN III	
APPROVED BY: DEEPAK YOGESH	CHECKED BY: RP SINGH
DRAWN BY: GAUTHAM SAI	DATE: 09.09.2022
SCALE:NTS	SHEET:1 OF 2

ALL DIMENSIONS ARE IN 'MM'
TOLERANCE UNLESS OTHERWISE STATED DIMENSIONAL
.XX=±0.25 .XXX=±0.127 ANGULAR ±1°

THIS DRAWING IS STRICTLY CONFIDENTIAL. MUST NOT BE COPIED OR DISCLOSED TO THIRD PARTY WITHOUT WRITTEN AUTHORIZATION FROM SUPRAJIT

PART NO: OFG-SAC-00001	CUSTOMER DRAWING NO: BE0802A013MNN

Suprajit

A3

NOTES :

01. CURRENT AND VOLTAGE = MAX 3A & 12VDC
02. ACTUAL SOL LOCK USING SINGLE PULSE,REVERSE/CHANGE OVER POLARITY TO UNLOCK.
03. OPERATING TEMPERATURE = -20° C TO 70° C.
04. ACTUATION TIME <200 MS MAX CONTINUOUS POWER SUPPLY 3S
05. SIGNAL SWITCH ELECTRICAL SPECIFICATION = 3.3V AND 0.5 MA TO 100MA
06. ENVIRONMENTAL SPECIFICATION: INGRESS PROTECTION = PART LEVEL = IP54
07. RANDOM VIBRATION= 10 YEARS OF USE WITH NO CRITICAL FAILURES WITH ON ROAD VIBRATION
    MECHANICAL SHOCK= 10 YEARS OF USE WITH NO CRITICAL FAILURES WITH POT HOLES & CURVE STONES
08. CORROSION = 5 YEARS OF USE WITH NO USER NOTICABLE DEGRADATION
    5 YEARS OF USE WITH NO CRITICAL FAILURES
09. RESISTANCE TO VEHICLE FLUID = PROTECTION AGAINST PETROL/DIESEL, GREASES,
    VEHICLE WASHING CHEMICAL,TRANSMISSION FLUID,ENGINE OIL,ETC.

Ⓑ 10. THE MANUAL OVERRIDE PUSH-PULL FORCE SHOULD BE FROM 7 TO 12 N
Ⓑ 11. THE MANUAL OVERRIDE CABLE PULL OF LOAD SHOULD BE 50N MIN
Ⓑ 12. TERMINAL CRIMPING PULL OF LOAD SHOULD BE 5KGF MIN
Ⓒ 13. GREASE GRADE : LI-41-32 BH
Ⓒ 14. SILICON OIL 1000CST TO BE USED BETWEEN CENTRE SHAFT & BRASS CORE

CONNECTOR DETAILS:

1. SUPPLIER NAME : BESMAK
2. SUPPLIER PART NO : 4MW 090 FHCL BLACK
3. CONNECTOR TYPE : MALE
4. TERMINAL SUPPLIER :TT
5. TERMINAL PART NO : TT-1378
6. WIRE SEAL SUPPLIER-NAME: TYCO
7. WIRE SEAL SUPPLIER PART NO :281934-4

X1

BILL OF MATERIALS:

SL NO	PART NUMBER	PART NAME	QTY	UOM	MATERIAL	FINISH	
11	COM-WAS-00452	RUBBER WASHER	1	EA	SILICONE	NATURAL	©
10	COM-CCI-00092	∅ 1.25 MM INNER	0.21	M	SS	NATURAL	©
09	COM-BKT-00701	CRIMPING SLEEVE	02	EA	ALUMINIUM	NATURAL	
08	COM-WRH-00076	WIRING HARNESS	01	EA	VARIOUS	VARIOUS	
07	CON-STC-00074	IDENTIFICATION TAG	01	EA	POLYESTER	WHITE	
06	COM-GKT-00019	RUBBER GASKET	01	EA	SILICONE	BLACK	
05	COM-HSG-00042	BOTTOM HOUSING	01	EA	ABS	BLACK	
04	COM-SPR-00548	SPRING	01	EA	SS 304	NATURAL	
03	COM-PLG-00001	WEDGE PLUNGER	01	EA	PA6 GF30	BLACK	
02	COM-SLN-00001	SOLENOID SUB ASSY	01	EA	VARIOUS	VARIOUS	
01	COM-HSG-00041	TOP HOUSING	01	EA	ABS	BLACK	

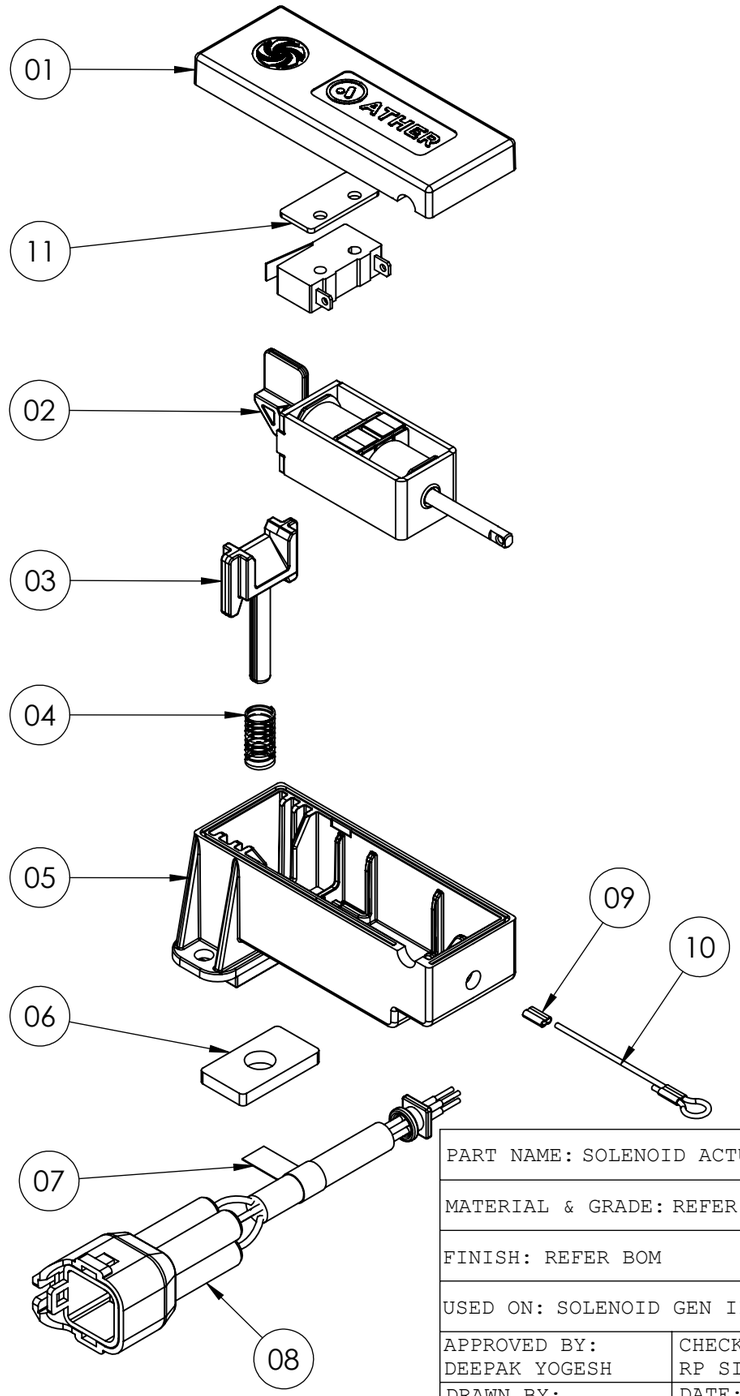

EXPLODED VIEW

PART NAME: SOLENOID ACTUATOR ASSY	
MATERIAL & GRADE: REFER BOM	
FINISH: REFER BOM	
USED ON: SOLENOID GEN III	
APPROVED BY: DEEPAK YOGESH	CHECKED BY: RP SINGH
DRAWN BY: GAUTHAM SAI	DATE: 09.09.2022
SCALE:NTS	SHEET:2 OF 2

ALL DIMENSIONS ARE IN 'MM'
TOLERANCE UNLESS OTHERWISE STATED DIMENSIONAL
.XX=±0.25 .XXX=±0.127 ANGULAR ±1°

THIS DRAWING IS STRICTLY CONFIDENTIAL. MUST NOT BE COPIED OR DISCLOSED TO THIRD PARTY WITHOUT WRITTEN AUTHORIZATION FROM SUPRAJIT

PART NO: OFG-SAC-00001	CUSTOMER DRAWING NO: BE0802A013MNN

Suprajit

A3