(SC) SPECIFIC CRITERIA (CC) CRITICAL CRITERIA (A) APPEARANCE/ ITEM

REV	ECN / ECR NO	DESCRIPTION	DATE	APPD
C	-	SOLIDWORKS TO NX MIGRATION	12/05/2023	-

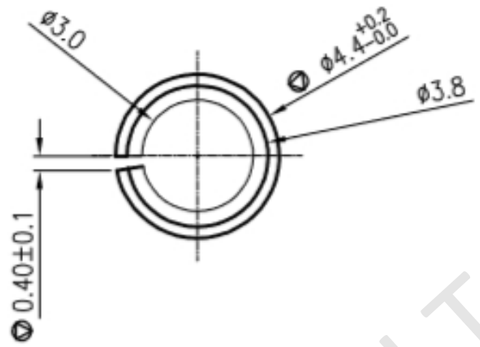

NOTE : 1) COMPONENTS MUST BE FREE FROM BURR.

2) CRITICAL DIMENSIONS SHOULD BE MAINTAIN WITHIN TOLERANCE AND IT SHOULD BE TABULATE IN INSPECTION REPORT.

3) HEAT TREATMENT AT 300°C FOR 2 HOUR.

4) HARDNESS:- 39-45HRC(370-440HV) AFTER HEAT TREATMENT.

5) PART SHOULD ALSO BE CHECKED FOR THE FITMENT WITH ASSOCIATED MATING PART.

Converted To NX

NOTES

THIS DRAWING IS PROPERTY OF ATHER ENERGY PVT LTD. UNAUTHORISED REPRODUCTION IN WHOLE OR IN PART IS PROHIBITED.

ATHER

FORM AND GENERAL TOLERANCE AS PER DIN EN ISO 2768.

DIM\.CLASS	f(fine)	m(medium)
0.5-3	±0.05	±0.1
3-6	±0.05	±0.1
6-30	±0.1	±0.2
30-120	±0.15	±0.3
120-400	±0.2	±0.5
400-1000	±0.3	±0.8

	NAME	DATE
DRAFT	BABU	01-06-2021
ENGG	CHETAN M	01-06-2021
NPD	CHETAN M	01-06-2021
APPD	GANESH	01-06-2021

THIRD ANGLE PROJECTION

MATERIAL: 0.30mm THICK BeCu SHEET

UNIT: MM

HEAT TREATMENT: 300° FOR 2 HOURS 39-45HRC (370 - 440HV)

FINISH: 7-8μ SILVER WITH WITH 2-3μ NICKEL UNDERCOAT

PROJECT: 450 X

TITLE: CONCAVE SLEEVE FOR POWER TERMINALS

DRAWING NO: 340A0021190

REV NO: C

SHEET 1 OF 1 | SCALE 1:1 | WEIGHT (Kg): | SIZE: A3

DATUM A	
DATUM B	
DATUM C	
(SC)	
(CC)	A3,B7,C7
(A)	