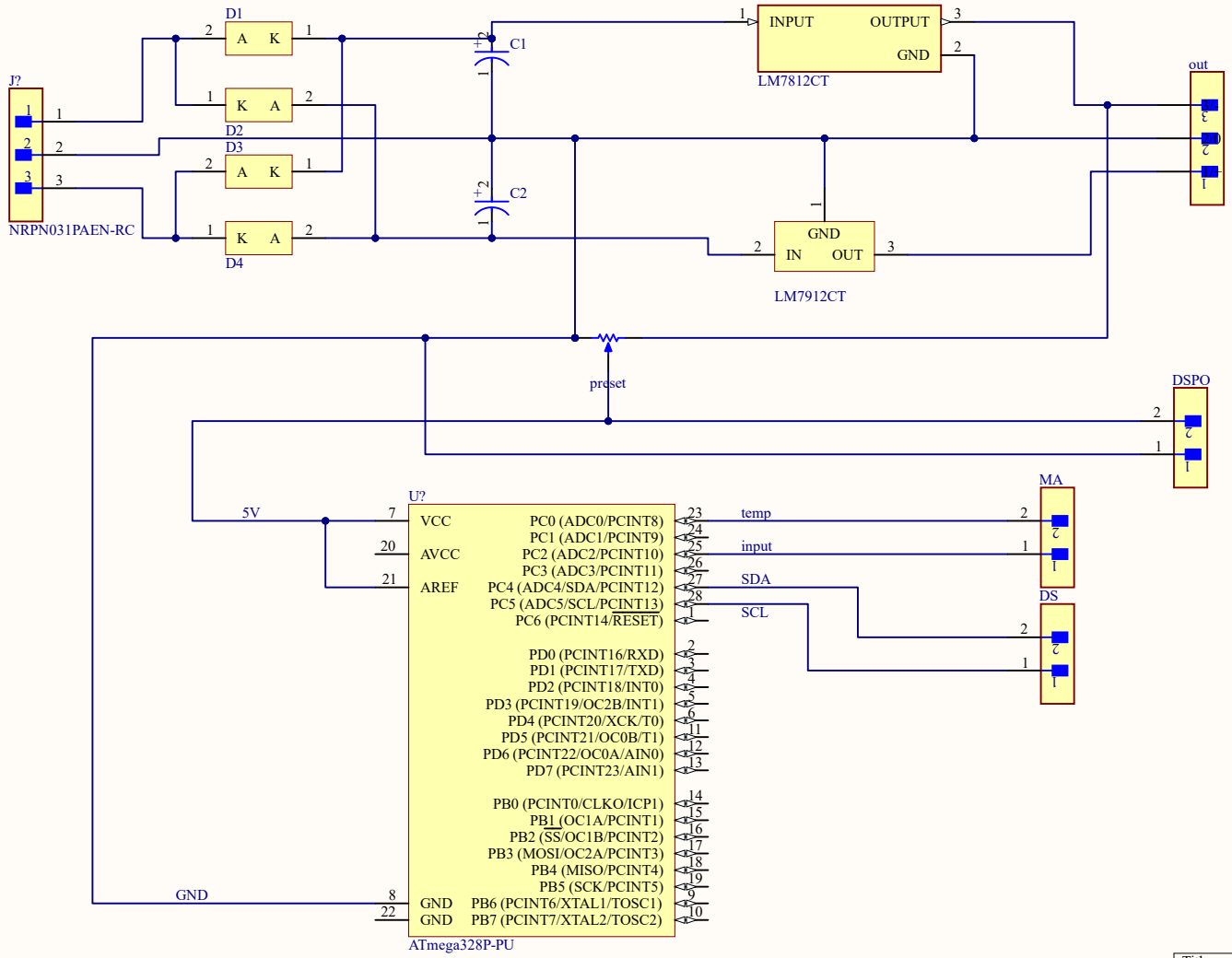

Title		
Size A4	Number	Revision
Date: 2/26/2023		Sheet of
File: C:\Users\..\powersupply.SchDoc		Drawn By: