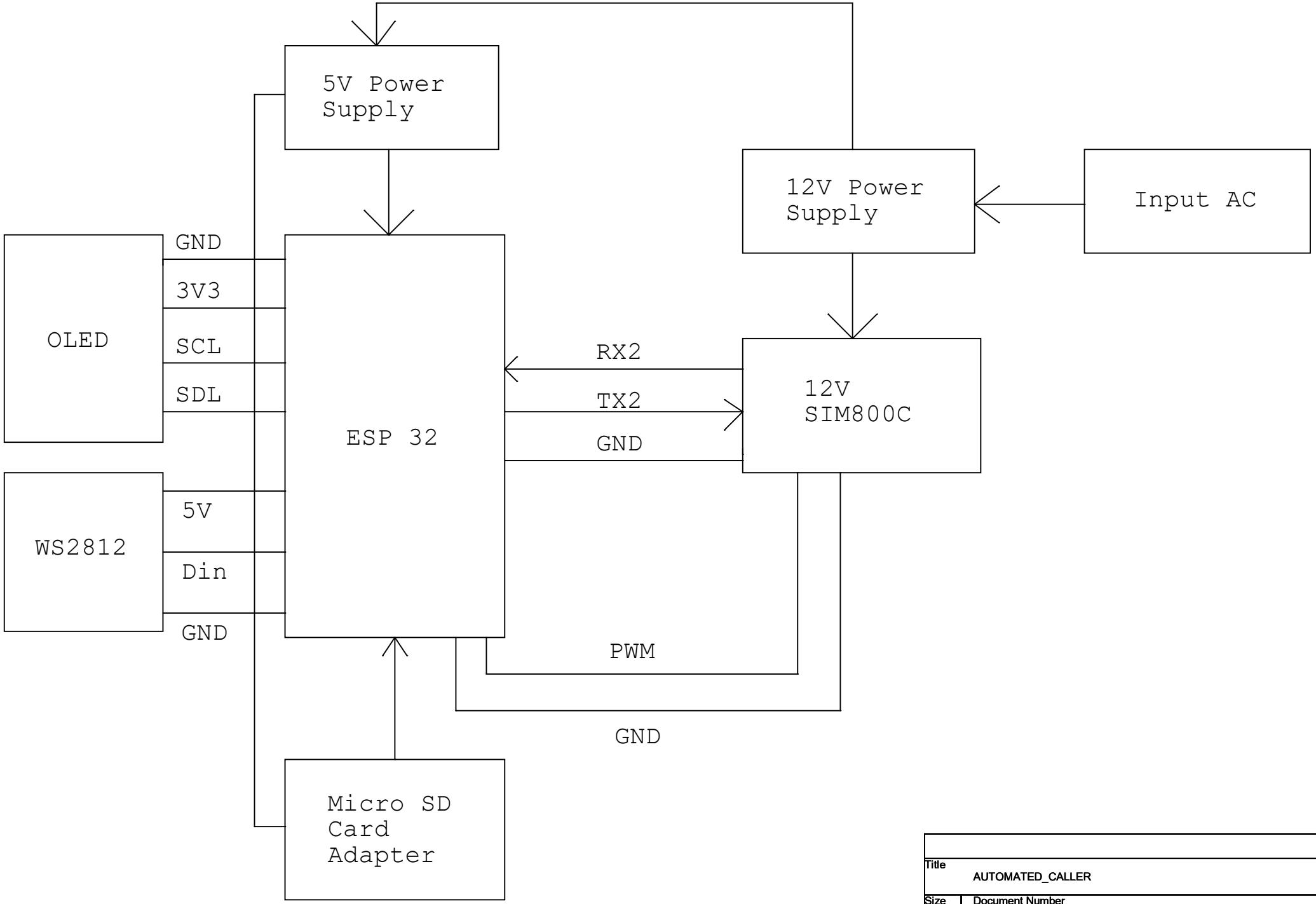

Title	AUTOMATED_CALLER	
Size A4	Document Number <Doc>	Rev <RevCo
Date: Thursday, March 13, 2025	Sheet 1 of 3	