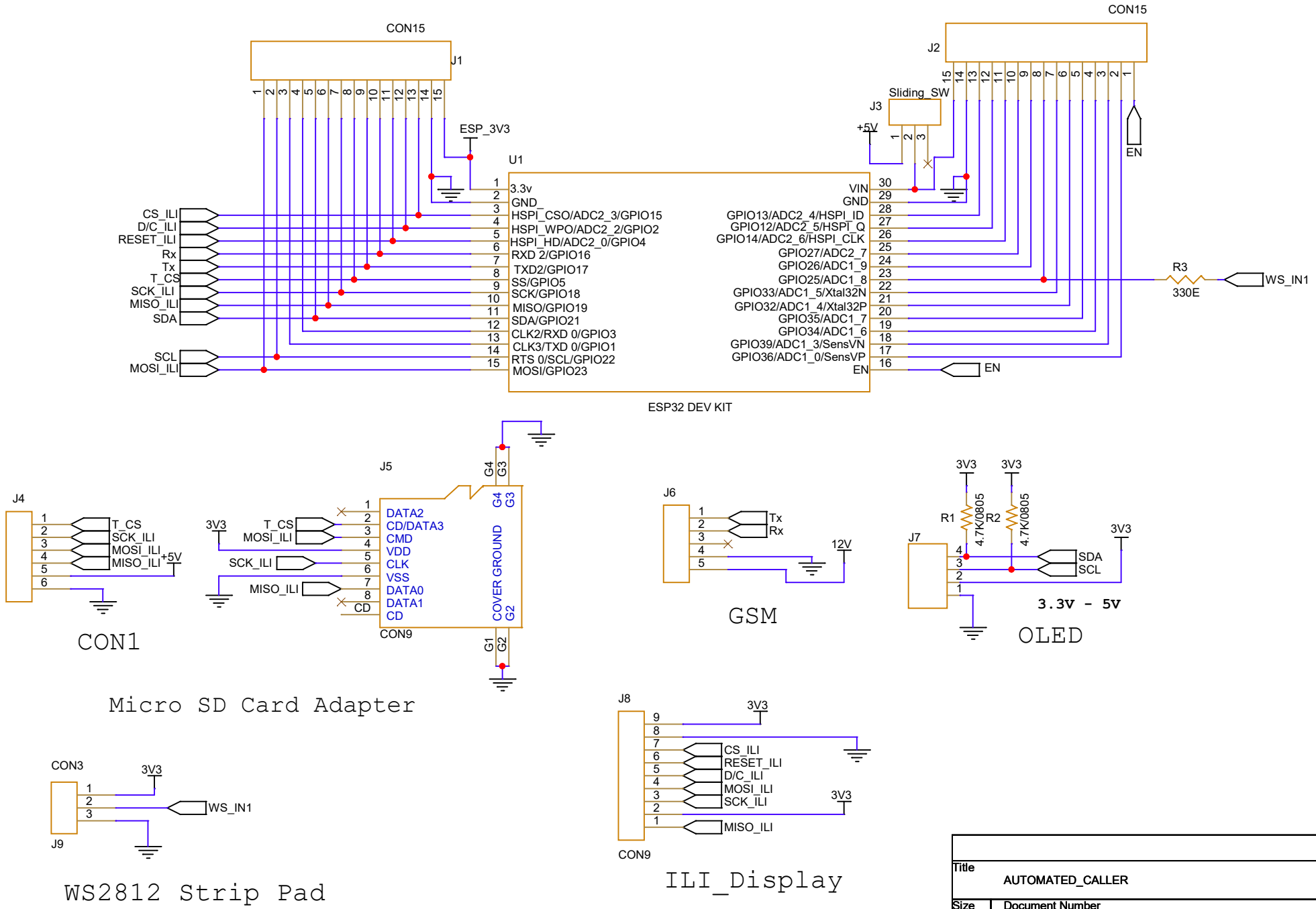

Title	AUTOMATED_CALLER	
Size A4	Document Number <Doc>	Rev <RevCo
Date: Friday, March 14, 2025	Sheet 2 of 3	