NNSNAP: Bispectrum Coefficients for Non-GNN Energy and Atomic Force Prediction

Russell Castro[1], Neil Mehta[2], Nicholas Lubbers[3]

[1]University of California, Berkeley, [2]Lawrence Berkeley National Laboratory, [3]Los Alamos National Laboratory

Abstract

We present NNSNAP, a model structure which relies on the symmetry-aware Spectral Neighborhood Analysis Potential (SNAP; Thompson *et al.* 2014). We replace heavy GNNs with a lightweight model which ingests these rotationally invariant bispectrum descriptors. We fit the gradient ∂E/∂B directly for numerical stability.

Prior Works

Method	Params	Val: Energy MAE	Val: Force MAE
GemNet-OC GNN	~ 38M	~ 0.29 eV	~ 0.026 eV A^{-1}
EquiformerV2 GNN (2024)	~ 85M	~ 0.29 eV	~ 0.020 eV A^{-1}
EScAIP-Small GNN	~ 83M	~ 0.26 eV	~ 0.020 eV A^{-1}
NNSNAP	~2M	~ 0.26 eV	~ 0.039 eV A^{-1}

Edge Embedding

Conventionally, edge information between atom pairs is embedded into a radial and angular part. I.e., edge coordinates (r, θ, φ) are mapped as r *with* the Fourier coefficients associated with the basis expansion of (θ, φ) under the canonical spherical harmonics basis. Bartok *et al.* (2010) first mapped r as a third hyper-polar angle. We map under the 3-sphere instead. These invariant features are contracted under Clebsch–Gordan-like coupling coefficients to enforce invariance and aggregated for each atom neighborhood.

SNAP Bispectrum

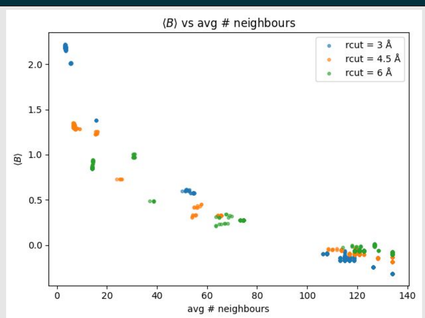

Figure 1: The SNAP bispectrum is a per-atom vector which encodes a rotationally invariant representation neighborhood density. Norm of B increases with neighbor count.

Objective

We want to pre-encode per-atom neighborhood information to feed into a network for conservative energy and per-atom force predictions.

Results

Note: Chemical Accuracy is ~4.3 x 10^{-2} eV mol^{-1}

Tungsten Training Set (~2k events of ~100 atoms per event)

- Inference time per event: 200 μs
- Bispectrum calculation per event: 0.5 s
- End Validation accuracy:
  - Energy: ~2 – 8 x 10^{-2} eV
  - Force: ~2 – 8 x 10^{-2} eV $Å^{-1}$

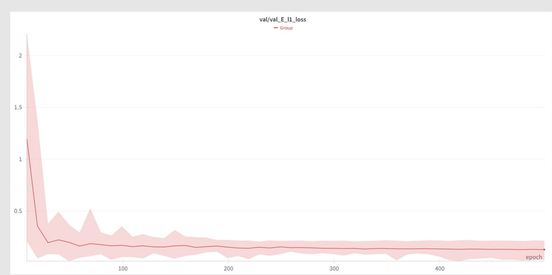

Figure 2: Mean Validation Energy L1 Loss (eV) over 100 training events 500 epochs

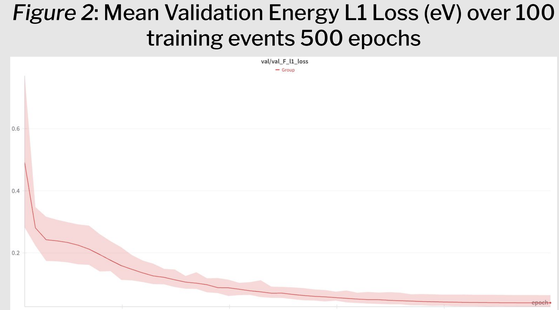

Figure 3: Mean Validation Force L1 Loss (eV $Å^{-1}$) over 100 training events 500 epochs

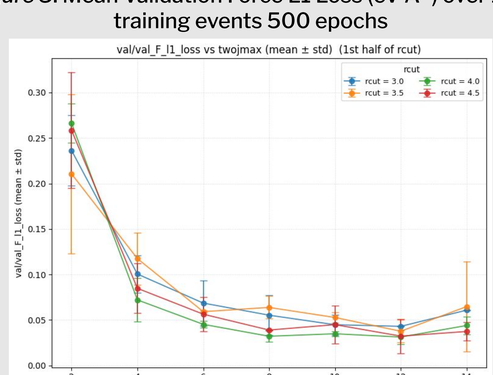

Figure 4: Validation Force L1 Loss (eV $Å^{-1}$) as $2j_{max}$ (B dimension K) is varied with neighborhood consideration cutoff (neighborhood sphere size)

Model Description

We propose training an L-layer, H-hidden multi-layer perceptron neural network for ∂E/∂B directly, then line-integrating for per-atom energy and contracting with precomputed ∂B/∂R (finite difference of our bispectra w.r.t. position) for forces.

MLPs allow for Sobolev training.

Spherical Harmonics

Following Bartok *et al.* (2010) and Thompson *et al.* (2014), we embed edges onto the 3-sphere.

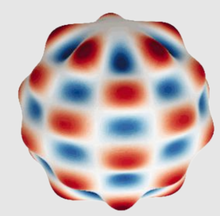

Figure 5: 2-sphere subset/analog to 3-sphere (Figure adapted from Wieczorek *et al.* 2018)

Error Analysis

NNSNAP: $M_\theta(B) \approx \frac{\partial E}{\partial B}$

Gradient error: $\varepsilon_B(B) = M_\theta(B) - \frac{\partial E}{\partial B}$

Energy error: $\varepsilon_E(B) = \int \varepsilon_B(B)\, dB \approx \sum_{t=1}^{M} \varepsilon_B(B_t)\frac{B_t}{t}$

$\Rightarrow ||\epsilon_E|| \leq ||\epsilon_B||||B||_\infty$

Force error: $\delta F = \varepsilon_B(B)\left(\frac{\partial B}{\partial R}\right)^{\mathsf{T}} + \frac{\partial E}{\partial B}O(h^2)$

$\Rightarrow ||\delta F|| \leq ||\epsilon_B||\left\|\frac{\partial B}{\partial R}\right\|_\infty + \left\|\frac{\partial E}{\partial B}\right\|_\infty h^2$

Conventional: $M_\theta(B) \approx E(B)$

Energy error: $\varepsilon_E(B) = M_\theta(B) - E(B)$

Gradient error (implicit): $\varepsilon_B(B) = \frac{\partial M_\theta}{\partial B} - \frac{\partial E}{\partial B} = \nabla_B \varepsilon_E(B)$

Force error: $\delta F = \nabla_B \varepsilon_E(B)\left(\frac{\partial B}{\partial R}\right)^{\mathsf{T}} + \frac{\partial E}{\partial B}O(h^2)$

$\Rightarrow ||\delta F|| \leq ||\epsilon_B||\left\|\frac{\partial B}{\partial R}\right\|_\infty + \left\|\frac{\partial E}{\partial B}\right\|_\infty h^2$

Conventionally training for energy gives the inevitable case that the energy gradient w.r.t. B is ill-conditioned. We instead explicitly supervise training for the gradient itself, to avoid its computation, and to enforce a combined, physically-informed loss landscape. We may employ Sobolev regularization for first-order smoothness in the prediction.

Information Flow

Input Event (molecule)

- atomic positions (R), species (Z)
- DFT Ground Truth: N atomic forces (F; eV $Å^{-1}$), 1 structure energy (E; eV)

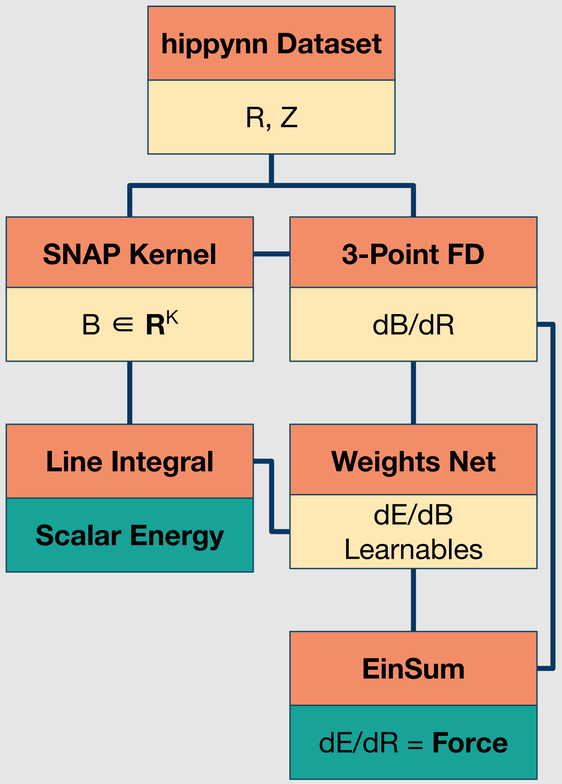

Figure 6: NNSNAP Model Structure for fast and accurate structure to energy and forces (S2EF) training and inference.

Acknowledgements

I gratefully acknowledge the guidance and support of our principal investigators, Drs. Neil Mehta and Nick Lubbers. Special thanks to Dr. Vivek Bharadwaj for his key guidance in prior equivariant-GNN work.

This work was supported by the U.S. Department of Energy under the CSA Summer Program.