Learning High-Quality Image Restoration Models via Auxiliary Training with Deep Feature-Level Guidance

Nalin Dev Sharma
Computer Science Engineering With Big Data Analytics
SRM Institute of Science and Technology
Ramapuram
Chennai, Tamil Nadu, India
ns9105@srmist.edu.in

Anant Verma
Computer Science Engineering With Big Data Analytics
SRM Institute of Science and Technology
Ramapuram
Chennai, Tamil Nadu, India
av8227@srmist.edu.in

Manish Kaushal
Computer Science Engineering With Big Data Analytics
SRM Institute of Science Technology
Ramapuram
Chennai, Tamil Nadu, India
mk@0836@srmist.edu.in

G. Sumathi
Department of Computer Science and Engineering
SRM Institute of Science and Technology
Ramapuram
Chennai, Tamil Nadu, India
swasthik36@gmail.com

Abstract-Many neural network architectures have been developed for image restoration. Primarily focusing on improving accuracy while maintaining computational efficiency. However, comparatively little attention has been given to optimizing training strategies. This paper introduces Deep-Feature Auxiliary Guidance (DFAG), a novel training method designed to enhance the accuracy of image restoration models without increasing inference time or altering their architectures. DFAG integrates auxiliary losses at each multi-scale level during training. Which helps stabilize deep feature learning; moreover, improves overall aspect quality. All DFAG modules operate only during the training phase and are removed during inference, ensuring that no additional computational cost is incurred. We evaluate DFAG on various multi-scale encoder-decoder- based image restoration models and observe consistent performance improvements across multiple tasks, including real image denoising, Gaussian motion deblurring, JPEG artifact reduction, and super-resolution. These results demonstrate that DFAG is an effective strategy for boosting image restoration performance without requiring architectural modifications.

Keywords-JPEG artifact removal, image deblurring, image denoising, image restoration, super-resolution.

I. INTRODUCTION

Image restoration is a basic issue in the computer vision that intents to restore high quality images on the basis of Reduced observations. Of the image downstream, including the medical imaging, autonomous systems, remote sensing, and digital photography, any form of degradation, including noise, blur, compression artifact, which resolution loss, may have a severe detrimental effect on the image quality and the application. In the last ten years, image restoration problems have seen the state of art drastically improve using deep learning-based methods. Specifically, convolutional neural networks (CNNs) and encoder-decoder networks have been found to be powerful at learning complicated mapping of degraded images to clean ones. These models can capture hierarchical properties and contextual information on multi-scale levels, allowing them to be useful on a wide range of restoration problems, including denoising, deblurring, artifact removal, and super-resolution.

The major area of research in recent times has been based on bettering network architectures, in order to accomplish better restoration performance at the cost of not sacrificing the computational efficiency. Such methods as multi-scale feature extraction, attention, residual learning, and transformer-based modules are well-studied to improve the representational strength of the restoration networks.Despite the fact that the architectural innovations have generated significant improvements, it is common that they are accompanied with increased model complexity, increased memory requirements, or increased inference times.

In the field In practice (especially in real time or resource limited scenarios), it is important to ensure efficient inference without compromising high restoration quality.

Although a lot of emphasis has been placed on an architectural design, relatively little has been done to enhance the training strategies of these networks. The methodology of training is very important in defining the quality of learned features and the overall performance of deep models. Badly trained training may give rise to unsteady feature training, slow training, or sub-optimal representations, in particular in deep multi-scale networks where data is required to flow through several layers and scales. Thus, effective training strategies which are capable of increasing feature learning without complicating inferences are a valuable direction in research.

In an attempt to overcome this problem, this paper presents Deep-Feature Auxiliary Guidance (DFAG), a new training methodology aimed at enhancing the acquisition of deep features in multi-scale image restoration networks. DFAG was built on the following essential concept: additional loses are added to the training process on multiple scales to provide the network with larger guidance at the intermediate feature levels. The method stabilizes the learning process and promotes the network to generate better intermediate representations, and eventually, the overall performance of the restoration. Notably, the DFAG modules are only activated when training and are fully deactivated when making predictions so that the architecture of the model and computational overheads do not change during deployment.

We test the suggested DFAG strategy on a series of encoder-decoder based image restoration models on various restoration tasks. The experimental findings show that there are consistent performance improvements in the tasks such as real image denoising, Gaussian denoising, motion deblurring, JPEG artifact reduction, and image super-resolution. These findings reveal the usefulness of the DFAG as a lightweight training enhancement method that can be effectively used to enhance the performance of restorations without adding extra inference overheads or architecture changes. The multi-scale supervision mechanism strengthens deep feature learning and stabilizes gradient propagation during training. The auxiliary guidance provided at different levels helps the model capture both fine textures and global image structures more effectively. As a result, the framework achieves improved PSNR, SSIM, and perceptual quality, making it suitable for practical image restoration applications.

II. KEY CONTRIBUTIONS

- **Proposed Training Strategy (DFAG)**

To enhance the learning ability of the already trained multi-scale encoder-decoder image restoration models, we present Deep-Feature Auxiliary Guidance (DFAG), a simple but suitable training approach. DFAG provokes intermediate-level supervision in the training process, allowing the network to learn deeper and more stable and informative representations and still maintain the original network. Notably, the proposed modules are abandoned at the training stage, and they are removed when making inferences, which does not add any extra computational cost to the deployment.

- **Training-Level Improvement Without Architectural Modification :**

Our method, in contrast to many other available methods that enhance the performance by changing the network architectures or trying to define more complex models, works on the training process itself. DFAG can be incorporated into the existing multi-scale encoder-decoder frameworks without causing any structural redesigning of these frameworks, thus being flexible and light weight to add on to restore the performance of these multi-scale restorations..

- **Analysis of Limitations in Conventional Training Methods :**

We conduct a detailed analysis of conventional training strategies used in multi-scale image restoration networks and highlight their limitations, particularly in terms of insufficient intermediate supervision and unstable deep feature learning. Based on this analysis, we demonstrate how DFAG addresses these issues by providing multi-scale auxiliary guidance that stabilizes feature learning and improves representation quality across different network depths.

- **Improved Feature Learning Through Multi-Scale Supervision**

We perform a critical examination of the traditional training mechanisms applicable in multi-scale image collapse structures and outline its drawbacks, especially inadequate interior guidance and wobbly profound attribute acquisition. On the basis of such an analysis, we show how DFAG alleviates such problems with multi- scale auxiliary guidance that stabilizes feature learning and enhances representation quality in multi-network depths.

- **Extensive Experimental Validation Across Tasks and Models.**

We prove the usefulness of DFAG by extensive experiments on a variety of image restoration tasks like real image denoising, Gaussian denoising, motion deblurring, reduction of the JPEG compression artifact, and image super-resolution. These experimental findings indicate that the commonalities of performance enhancement occur with the implementation of DFAG to the different multi-scale encoder-deceler structures.

- **Generalizable and Practical Framework.**

The suggested DFAG framework is very flexible and may be used as an addon to a broad spectrum of already existing image restoration networks. Since it does not involve an extra inference cost and requires few adjustments when training it, it can be used in a real-world setting to offer a viable and scalable solution in improving the restoration performance of the system.

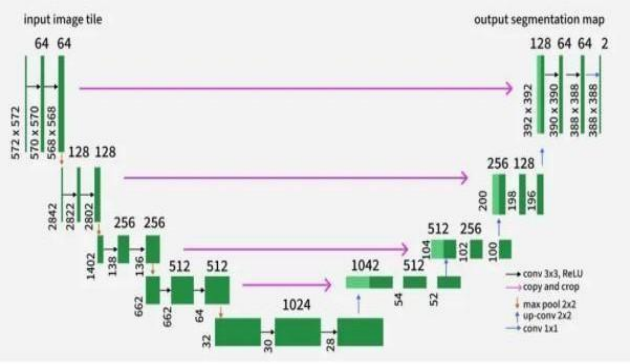

Figure 1. Multi-scale U-Net encoder–decoder architecture

III. RELATED WORKS

A. Image Restoration : EImage restoration is desired to achieve the high-quality image recovery by removing noisy background, blur, compression artifacts or loss of image resolution in deteriorated observations. The conventional image restoration schemes had heavy dependency on manual priors, as well as optimization-based ones. The total variation (TV) regularization method by Rudin et al. [1], the sparse coding method by Elad and Aharon [2], and the non-local filter method as used in BM3D by Dabov et al. [3] were all quite successful methods in the field of denoising and restoration. These algorithms usually bore heavy statistical hypotheses of natural images and on optimization processes.

CNNs have risen to be the state-of-the-art in image restoration with the fastest development of deep learning. One of the first images denoising methods that used deep learning was DnCNN introduced by Zhang et al. [4] that showed that deep CNNs could be trained to make residual mappings between distorted and clean images. In a similar fashion, the introduction of SRCNN by Dong et al. [5] was a significant breakthrough in single-image super-resolution since it demonstrated that CNNs could directly be trained to learn end-to-end mappings to image-enhancement problems.

Based on these initial achievements numerous architectures have been created to enhance the performance of restorations. The use of encoder-decoder networks such as U-Net by Ronneberger et al. [6] gained much popularity as it enabled general context and fine-grained local myatesa to capture spatial structure by use of skip connections and multi-scale feature-detection. Later publications have even improved these architectures through the addition of residual learning, dense connections and multi-stage refinement architectures.

Recent work on image restoration has made more usage of attention mechanisms and transformer architectures. Models that enable channels and spatial attention mechanisms like those suggested in RCAN (Residual Channel Attention Network) by Zhang et al. [7] also enable models to focus on and highlight informative features selectively. Models based on transformers like SwinIR suggested by Liang et al. [8] use self-attention to include long-range relationships and global contextual data. Simultaneously, diffusion-based models have proven in image restoration operations to be promising as well because of their powerful generative ability [9].

Multi-scale feature processing is another area of significant focus in contemporary restoration models in which the information is extracted and processed at various scales. Multi-scale architectures make networks capture global structures in addition to local details. These are e.g., hierarchical encoder-decoder models, or multi-stage restoration networks. Although the approaches outlined concentrate more on architectural innovations, our work will be of a different perspective of enhancing the training strategy itself. In particular, the suggested Deep-Feature Auxiliary Guidance (DFAG) increases the stability of trainings and feature learning via auxiliary supervision without altering the underlying model structure and or adding complexity to the inferences.

B. Auxiliary Guidance : Auxiliary supervision is an efficient technique that has been adopted a long time ago in enhancing the training of deep neural networks. The first and the most effective one is GoogLeNet (Inception Network) [10] by Szegedy

et al. which adds auxiliary classifiers to intermediate networks to ease the vanishing gradient issue and enhance the performance of training very deep networks. These auxiliary branches offered more supervision signals in training to enable more discriminative features to be learnt by intermediate layers.

Later works have shown that auxiliary losses may serve as a regularization mechanism and that it can be used to guide intermediate representations and stabilize gradient flow in the network. Lee et al. [11] created the idea of deeply supervised networks to have the use of supervision signals in more than one depth of the network to enhance the learning of features, besides accelerating the convergence. The strategy has been effectively implemented in different fields such as image classification, semantic segmentation and medical image analysis.

Auxiliary losses are typically employed in guiding the learning of features at intermediate network stages in computer vision activities like semantic segmentation. Indicatively, architectures such as PSPNet [12] add the additional supervision component of assisting optimization and allowing the network to learn useful intermediate representations. In the same way, the auxiliary guidance has been studied in generative models and diffusion models to increase training stability.

Though the advantage of auxiliary supervision has been proved in most of the vision tasks, its usage in image restoration networks, especially in multi-scale encoder-decoder networks, is relatively understudied. The image restoration models usually have deep hierarchical structure and the feature refinement process takes place on different scales, and thus are a good candidate in the intermediate supervision strategy.

Driven by this observation, our contribution is Deep-Features Auxiliary Guidance (DFAG) where auxiliary losses on multiscales are introduced into the training process. Compared to the previous methods in which the main emphasis is placed on the architectural enhancements, DFAG targets the quality of feature learning and training stability but preserves the original model structure and computational efficiency in the inference.

IV. PROPOSED SYSTEM

The proposed system introduces a novel training strategy called Deep-Feature Auxiliary Guidance (DFAG) to enhance the performance of multi-scale encoder-decoder-based image restoration model without modifying their architecture or increasing computational cost during inference.

Traditional image restoration networks typically apply supervision only at the final output layer using a single loss function. While this approach simplifies training, it often leads to two major problems: vanishing gradients in deeper encoder layers and ambiguity in sub-task allocation between decoder and up-sampling modules. As a result, deep feature representations become unstable, saturated, or poorly optimized, ultimately limiting restoration performance. To address these limitations, the proposed system incorporates auxiliary supervision at multiple intermediate scale levels during training, thereby strengthening gradient flow and improving feature learning across the entire network.

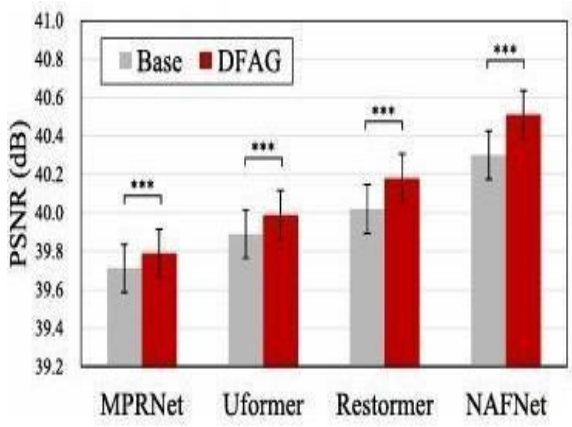

Figure 2. Quantitative comparison of PSNR

The backbone remains a standard multi-scale encoder–decoder architecture, such as U-Net or transformer-based variants commonly used in image restoration tasks.

The encoder progressively extracts hierarchical features through down-sampling operations, capturing both local textures and global contextual information. The decoder then reconstructs the high-quality image by progressively up-sampling and refining these features, with skip connections linking corresponding encoder and decoder levels to preserve spatial details. Importantly, the architecture itself remains unchanged DFAG modifies only the training process.During training, auxiliary guidance modules are attached to the output of each decoder level before the up-sampling operation.

Each auxiliary module consists of a lightweight 3×3 convolution layer that converts intermediate feature

maps into residual image predictions with the same number of channels as the ground truth image. Since intermediate feature maps exist at lower resolutions, the corresponding ground truth residual image is down-sampled using average pooling to match the spatial dimensions of each scale level. An L1 loss is then computed between the predicted residual and the down-sampled ground truth residual. These auxiliary losses provide direct supervision to intermediate layers, creating shorter gradient paths and effectively mitigating the vanishing gradient problem that typically affects deep encoder layers.

The overall training objective of the proposed system is defined as a combination of the primary restoration loss and multiple auxiliary losses. Specifically, the total loss is formulated as the sum of the main loss applied at the final output and a weighted sum of auxiliary losses applied at each intermediate scale. A balancing parameter controls the contribution of auxiliary supervision to ensure stable optimization. By distributing supervision across multiple scales, the system ensures that deep feature representations receive sufficient gradient updates, leading to more stable learning and improved semantic consistency in low-resolution feature regions.

In addition to improving gradient flow, the proposed system also clarifies the functional roles of decoder and up-sampling modules. In conventional training, flexible up-sampling techniques such as pixel shuffle may unintentionally assume feature extraction responsibilities, causing grid-like artifacts and unstable feature representations. By supervising decoder outputs directly before up-sampling, DFAG encourages decoders to focus solely on feature extraction while allowing up-sampling modules to concentrate strictly on resolution enhancement. This clearer sub-task allocation results in smoother feature transitions and reduced artifact generation.

To further enhance performance, the proposed system employs a multi-stage training strategy. In the first stage, the model is trained using both the main loss and auxiliary losses to stabilize deep feature learning.

In the second stage, all auxiliary modules are removed, and the model is fine-tuned using only the primary restoration loss.

	w_1	w_2	w_3	PSNR
Baseline	0.0	0.0	0.0	40.07
Uniform w_n	1.0	1.0	1.0	40.06
	0.5	0.5	0.5	40.08
Increasing w_n	2.0	3.0	4.0	40.04
Decreasing w_n	0.04	0.02	0.01	40.07
	0.5	0.25	0.25	40.08
	0.5	0.25	0.125	40.08
	0.66	0.44	0.296	40.08
	0.75	0.5	0.25	40.09
	0.6	**0.4**	**0.2**	**40.10**

Figure 3. Ablation study of different weight configurations

Since the auxiliary components are used exclusively during training and completely removed during inference, the proposed system introduces no additional computational overhead, memory cost, or structural modification at deployment time.

Overall, the proposed DFAG-based system provides a simple yet highly effective training enhancement framework for image restoration models. It improves gradient distribution, stabilizes deep feature learning, reduces artifacts, and consistently boosts restoration accuracy across tasks such as real image denoising, Gaussian denoising, motion deblurring, JPEG artifact reduction, and super-resolution. Most importantly, these improvements are achieved without altering the original architecture or increasing inference complexity, making the proposed system practical, scalable, and easily adaptable to existing state-of-the-art restoration networks.

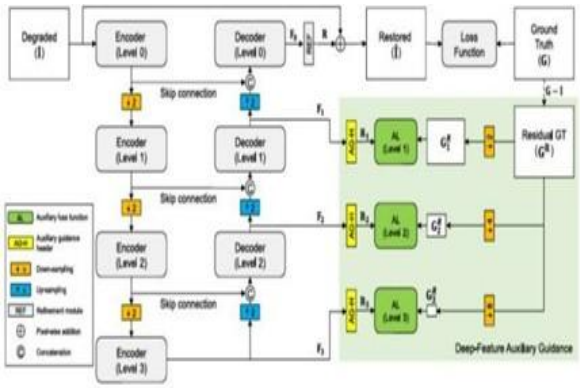

Figure 4. Overall process of DFAG.

V. SYSTEM IMPLEMENTATION

The proposed system for learning high-quality image restoration models is designed around a deep neural architecture enhanced through auxiliary training with deep feature-level guidance. The core objective of the framework is to improve perceptual and structural quality of restored images by integrating semantic supervision during the training phase. The system consists of a primary restoration network responsible for reconstructing degraded images and an auxiliary feature guidance mechanism that operates exclusively during training. The primary network follows a deep convolutional architecture composed of stacked convolutional layers, residual blocks, and non-linear activation functions to effectively learn hierarchical feature representations. This network accepts degraded images affected by noise, blur, compression artifacts, or resolution loss and produces restored outputs that aim to approximate the original high- quality images.

To strengthen the learning process, an auxiliary network is incorporated to provide feature-level supervision. This auxiliary component extracts high- level representations from both the restored output and the corresponding ground truth image. These features capture semantic information such as texture patterns, structural edges, and contextual relationships that are not fully represented through pixel-level comparison alone. During the forward propagation stage, the degraded image passes through the restoration network to generate a reconstructed image.

Both the reconstructed image and the ground truth image are then fed into the auxiliary feature extractor. The extracted deep features are compared to compute a perceptual loss, which encourages the restoration network to generate outputs that are not only numerically accurate but also visually meaningful.

The overall training objective is formulated as a weighted combination of multiple loss functions. A pixel-level reconstruction loss, typically L1 loss, ensures fidelity between restored and ground truth images. A feature-level perceptual loss minimizes the difference between deep representations of restored and reference images. In some configurations, additional structural similarity loss may be included to enhance edge preservation and structural consistency. The total loss function balances these components using adjustable weighting parameters, allowing controlled influence of each supervision signal. Optimization is performed using the Adam optimizer with a carefully selected learning rate schedule to ensure stable convergence.

The training process utilizes data augmentation techniques such as cropping, rotation, and horizontal flipping to improve model generalization. The system is implemented using modern deep learning frameworks and trained on GPU-based hardware to handle computational demands efficiently. Importantly, the auxiliary branch is removed during inference, ensuring that the final model remains lightweight and suitable for real-time deployment.

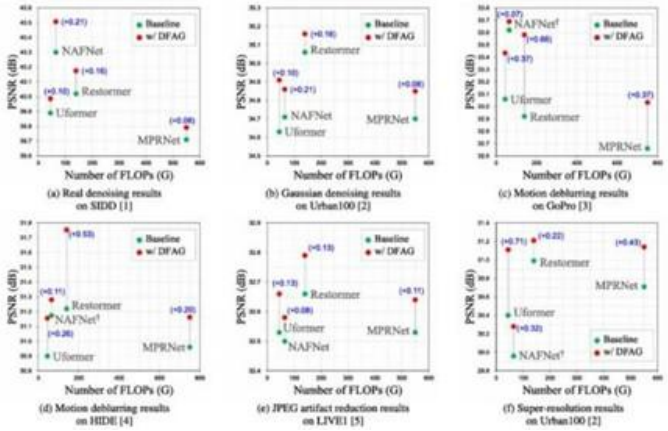

Figure 5. PSNR vs. FLOPs comparison

VI. RESULT

The experimental evaluation of the proposed framework demonstrates clear improvements over conventional image restoration models trained solely with pixel-based supervision. Quantitative results across benchmark datasets indicate higher PSNR values, reflecting improved reconstruction accuracy. Structural Similarity Index (SSIM) scores also show consistent enhancement, suggesting better preservation of spatial structures and image textures. Furthermore, perceptual similarity assessments reveal that the proposed method produces outputs that are visually closer to ground truth images in terms of texture and fine detail.
Qualitative analysis further supports these findings..

Unlike traditional methods that often sacrifice high-frequency details to minimize pixel error, the feature-guided training strategy enables the network to recover subtle visual elements such as hair strands, object contours, and fine background textures. Color consistency and natural appearance are also noticeably improved. The integration of deep feature-level supervision allows the model to understand contextual and semantic information, leading to outputs that are perceptually more realistic. Despite these improvements, the inference complexity remains unchanged due to the removal of the auxiliary guidance module after training, maintaining efficiency without compromising quality.

VII. CONCLUSION

This study presents a comprehensive image restoration framework that leverages auxiliary training with deep feature-level guidance to enhance restoration quality. By integrating semantic information through deep feature comparison during training, the proposed method addresses limitations associated with traditional pixel-only loss optimization. The results demonstrate that combining pixel-level and perceptual supervision leads to substantial improvements in both objective metrics and subjective visual quality. The framework effectively balances reconstruction fidelity and perceptual realism while maintaining computational efficiency at inference time.

The findings confirm that auxiliary guidance is a powerful strategy for enhancing deep learning-based restoration models and can be extended to various low-level vision tasks.

VIII. FUTURE DEVELOPMENT

Future research directions can further expand and refine this framework. Incorporating transformer- based architectures may improve the modeling of long-range dependencies and global contextual relationships within images. Adaptive loss weighting strategies could dynamically adjust supervision strength based on degradation severity or image content. Training with real-world degradation datasets instead of synthetic distortions would improve robustness in practical applications. Additionally, model compression techniques such as pruning and knowledge distillation could enable deployment on resource-constrained devices such as smartphones and embedded systems. Integrating adversarial learning mechanisms may further enhance perceptual realism by encouraging the generation of sharper and more natural textures.

REFERENCES

[1] Rudin, Osher, and Fatemi, Nonlinear total variation based noise removal algorithms, 1992.

[2] Elad and Aharon, Image denoising via sparse and redundant representations over learned dictionaries, 2006.

[3] Dabov et al., Image denoising by sparse 3D transform- domain collaborative filtering (BM3D), 2007.

[4] Zhang et al., Beyond a Gaussian denoiser: Residual learning of deep CNN for image denoising (DnCNN), 2017.

[5] Dong et al., Image Super-Resolution Using Deep Convolutional Networks (SRCNN), 2014.

[6] Ronneberger et al., U-Net: Convolutional Networks for Biomedical Image Segmentation, 2015.

[7] Zhang et al., RCAN: Image Super-Resolution Using Very Deep Residual Channel Attention Networks, 2018.

[8] Liang et al., SwinIR: Image Restoration Using Swin Transformer, 2021.

[9] Ho et al., Denoising Diffusion Probabilistic Models, 2020.

[10] Szegedy et al., Going Deeper with Convolutions (GoogLeNet), 2015.

[11] Lee et al., Deeply-Supervised Nets, 2015.

[12] Zhao et al., Pyramid Scene Parsing Network (PSPNet), 2017

[13]A. Abdelhamed, S. Lin, and M. S. Brown, ''A high-quality denoising dataset for smartphone cameras,'' in Proc. IEEE/CVF Conf. Comput. Vis. Pattern Recognit., Jun. 2018, pp. 1692–1700.

[14]J. Huang, A. Singh, and N. Ahuja, ''Single image super-resolution from transformed self-exemplars,'' in Proc. CVPR, Jun. 2015, pp. 5197–5206.

[15]S. Nah, T. H. Kim, and K. M. Lee, ''Deep multi-scale convolutional neural network for dynamic scene deblurring,'' in Proc. IEEE Conf. Comput. Vis. Pattern Recognit. (CVPR), Jul. 2017, pp. 257–265.

[16]Z. Shen, W. Wang, X. Lu, J. Shen, H. Ling, T. Xu, and L. Shao, ''Humanaware motion deblurring,'' in Proc. ICCV, Oct. 2019, pp. 5571–5580.

[17]H. Sheikh. (2005). Live Image Quality Assessment Database Release 2. [Online]. Available: http://live.ece.utexas.edu/research/quality

[18]J. Su, B. Xu, and H. Yin, ''A survey of deep learning approaches to image restoration,'' Neurocomputing, vol. 487, pp. 46–65, May 2022.

[19]M. Banham and A. Katsaggelos, ''Digital image restoration,'' IEEE Signal Process. Mag., vol. 14, no. 2, pp. 24–41, Feb. 1997.

[20]C. Tian, L. Fei, W. Zheng, Y. Xu, W. Zuo, and C.-W. Lin, ''Deep learning on image denoising: An overview,'' Neural Netw., vol. 131, pp. 251–275, Nov. 2020.