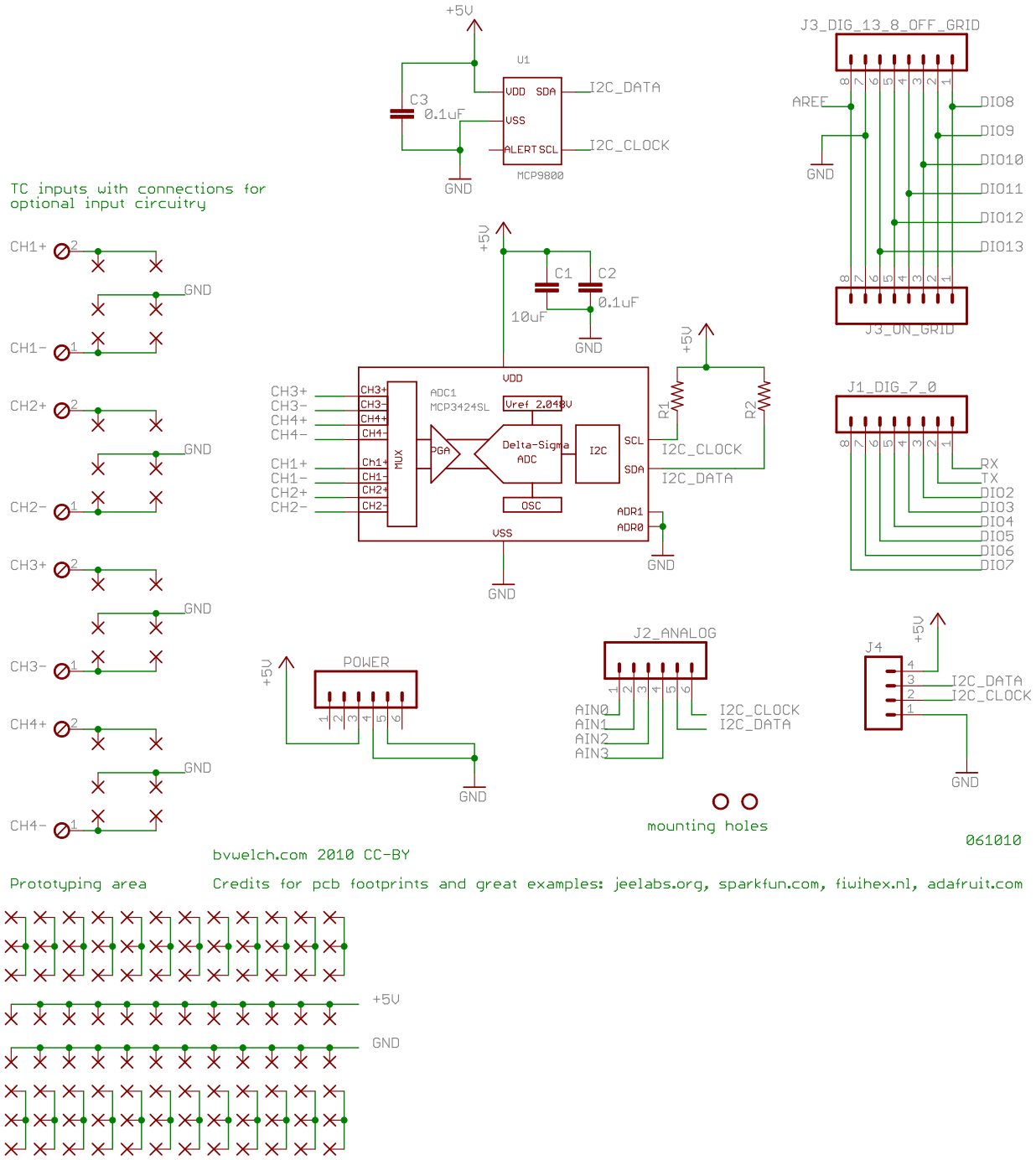
+5V
U1
C3
0.1uF
VDD
SDA
VSS
ALERT
SCL
MCP9800
I2C_DATA
I2C_CLOCK
GND
J3_DIG_13_8_OFF_GRID
AREF
DIO8
DIO9
DIO10
DIO11
DIO12
DIO13
J3_ON_GRID
TC inputs with connections for
optional input circuitry
CH1+
CH1-
CH2+
CH2-
CH3+
CH3-
CH4+
CH4-
C1
C2
10uF
0.1uF
ADC1
MCP3424SL
Vref 2.048V
MUX
PGA
Delta-Sigma
ADC
I2C
OSC
R1
R2
ADR1
ADR0
J1_DIG_7_0
RX
TX
DIO2
DIO3
DIO4
DIO5
DIO6
DIO7
POWER
J2_ANALOG
AIN0
AIN1
AIN2
AIN3
J4
mounting holes
061010
bvwelch.com 2010 CC-BY
Prototyping area
Credits for pcb footprints and great examples: jeelabs.org, sparkfun.com, fiwihex.nl, adafruit.com