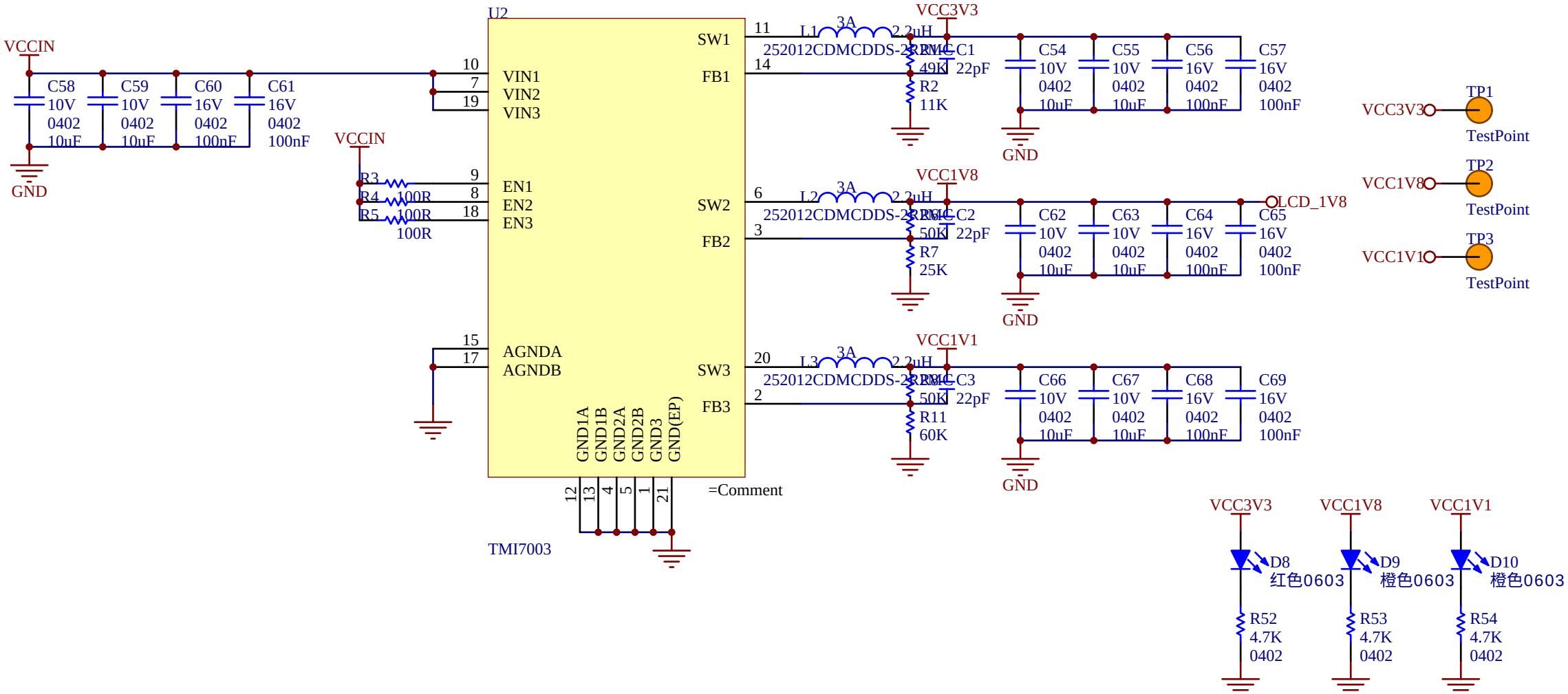
U2
VCCIN
C58 10V 0402 10uF
C59 10V 0402 10uF
C60 16V 0402 100nF
C61 16V 0402 100nF
GND
VIN1
VIN2
VIN3
EN1
EN2
EN3
AGNDA
AGNDB
R3 100R
R4 100R
R5 100R
SW1
FB1
SW2
FB2
SW3
FB3
GND1A
GND1B
GND2A
GND2B
GND3
GND(EP)
=Comment
TMI7003
L1 3A 2.2uH
252012CDMCDDS-2R2MC
VCC3V3
C1 22pF
R1 49K
R2 11K
C54 10V 0402 10uF
C55 10V 0402 10uF
C56 16V 0402 100nF
C57 16V 0402 100nF
L2 3A 2.2uH
252012CDMCDDS-2R2MC
VCC1V8
C2 22pF
R6 50K
R7 25K
C62 10V 0402 10uF
C63 10V 0402 10uF
C64 16V 0402 100nF
C65 16V 0402 100nF
LCD_1V8
L3 3A 2.2uH
252012CDMCDDS-2R2MC
VCC1V1
C3 22pF
R10 50K
R11 60K
C66 10V 0402 10uF
C67 10V 0402 10uF
C68 16V 0402 100nF
C69 16V 0402 100nF
TP1 TestPoint
TP2 TestPoint
TP3 TestPoint
D8 红色0603
D9 橙色0603
D10 橙色0603
R52 4.7K 0402
R53 4.7K 0402
R54 4.7K 0402

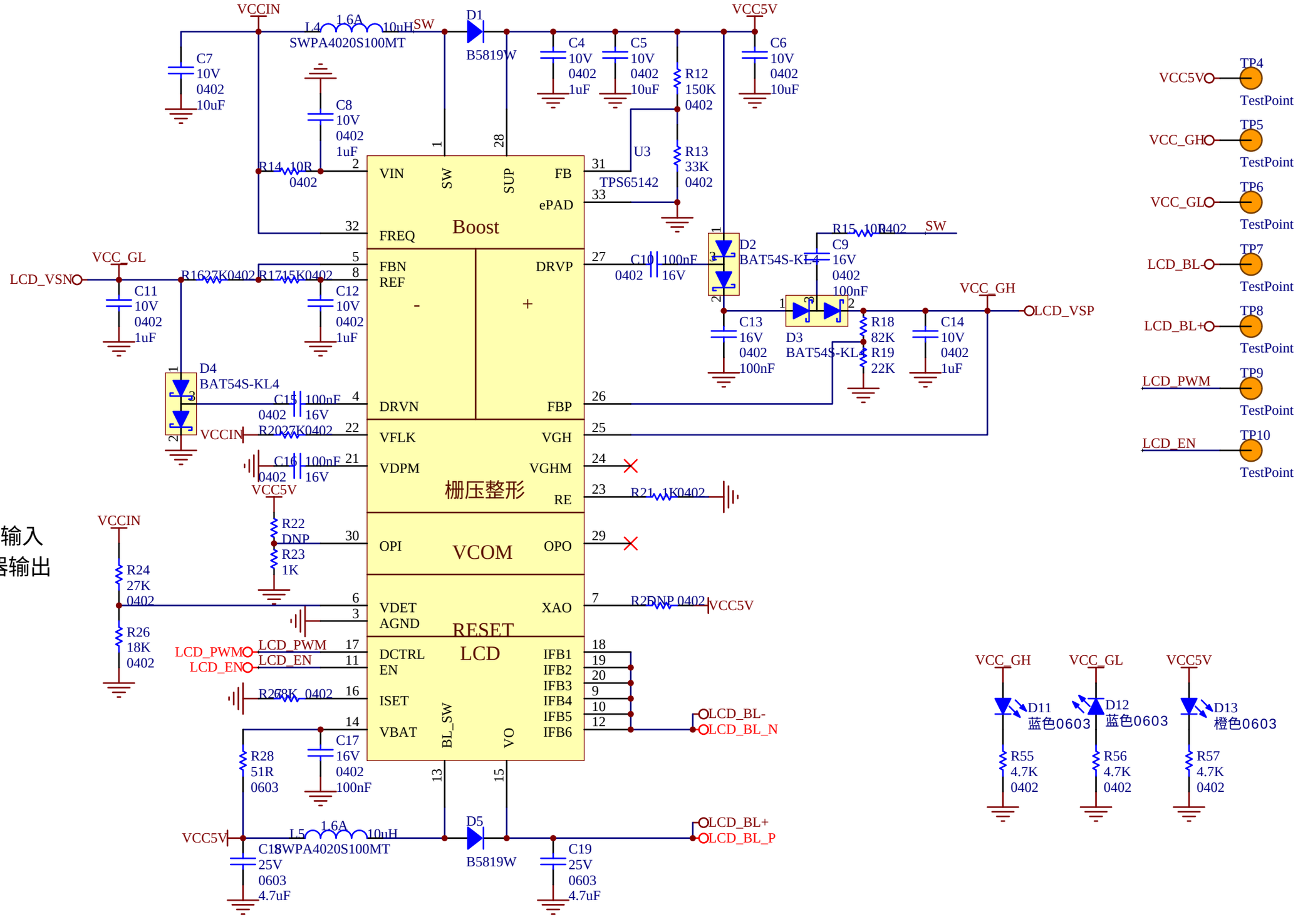

OPI：VCOM缓冲器输入

OPO：VCOM缓冲器输出

PWM：1001KHz

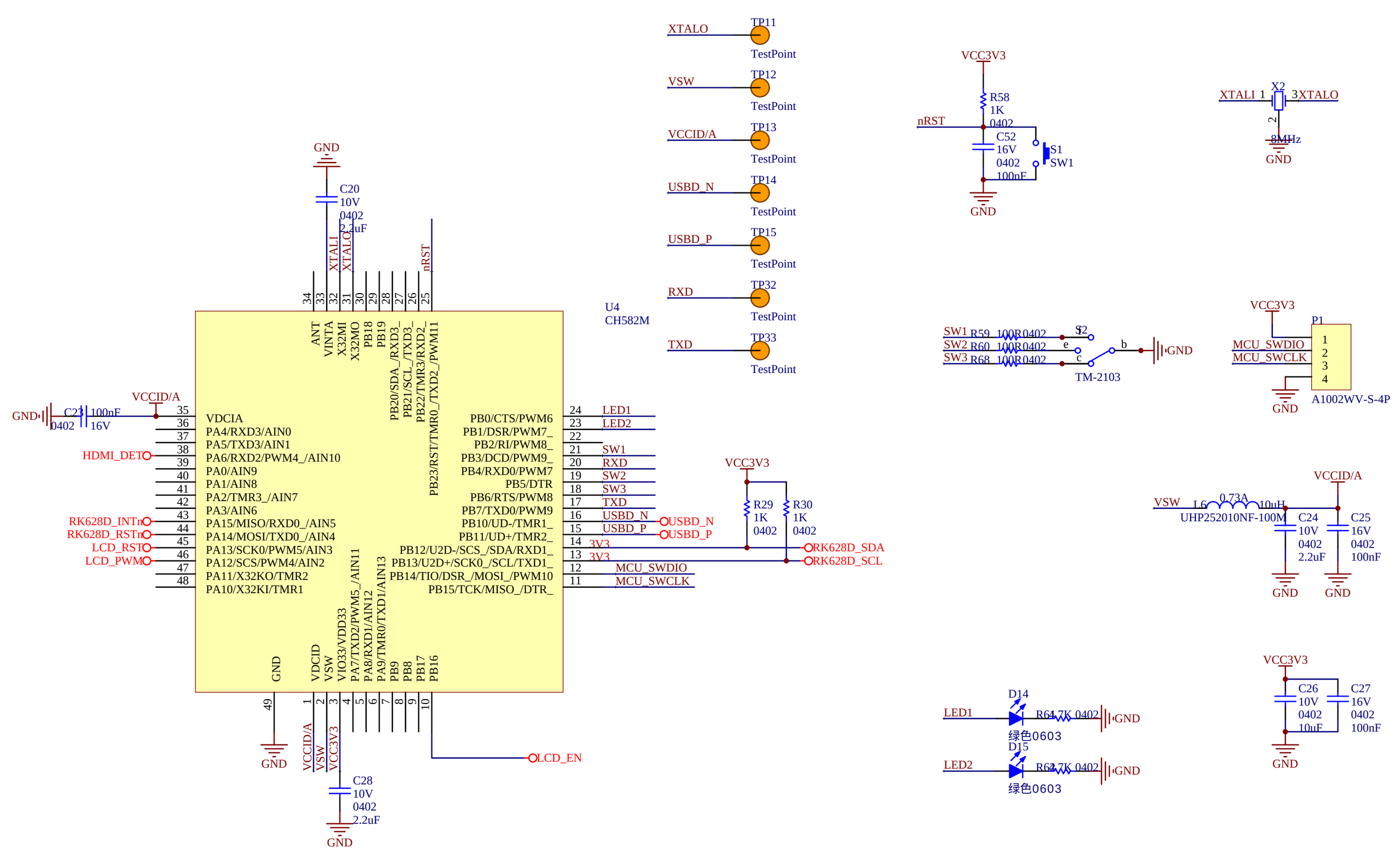
U4
CH582M
GND
C20
10V
0402
2.2uF
XTALI
XTALO
nRST
ANT
VINTA
X32MI
X32MO
PB18
PB19
PB20/SDA_/RXD3_
PB21/SCL_/TXD3_
PB22/TMR3/RXD2_
PB23/RST/TMR0_/TXD2_/PWM11
VCCID/A
C23
100nF
0402
16V
VDCIA
PA4/RXD3/AIN0
PA5/TXD3/AIN1
PA6/RXD2/PWM4_/AIN10
PA0/AIN9
PA1/AIN8
PA2/TMR3_/AIN7
PA3/AIN6
PA15/MISO/RXD0_/AIN5
PA14/MOSI/TXD0_/AIN4
PA13/SCK0/PWM5/AIN3
PA12/SCS/PWM4/AIN2
PA11/X32KO/TMR2
PA10/X32KI/TMR1
HDMI_DET
RK628D_INTn
RK628D_RSTn
LCD_RST
LCD_PWM
PB0/CTS/PWM6
PB1/DSR/PWM7_
PB2/RI/PWM8_
PB3/DCD/PWM9_
PB4/RXD0/PWM7
PB5/DTR
PB6/RTS/PWM8
PB7/TXD0/PWM9
PB10/UD-/TMR1_
PB11/UD+/TMR2_
PB12/U2D-/SCS_/SDA/RXD1_
PB13/U2D+/SCK0_/SCL/TXD1_
PB14/TIO/DSR_/MOSI_/PWM10
PB15/TCK/MISO_/DTR_
LED1
LED2
SW1
RXD
SW2
SW3
TXD
USBD_N
USBD_P
3V3
MCU_SWDIO
MCU_SWCLK
VCC3V3
R29
1K
0402
R30
1K
0402
RK628D_SDA
RK628D_SCL
GND
VDCID
VSW
VIO33/VDD33
PA7/TXD2/PWM5_/AIN11
PA8/RXD1/AIN12
PA9/TMR0/TXD1/AIN13
PB9
PB8
PB17
PB16
LCD_EN
VCCID/A
VSW
VCC3V3
C28
10V
0402
2.2uF
TP11
TP12
TP13
TP14
TP15
TP32
TP33
TestPoint
R58
1K
0402
C52
16V
0402
100nF
S1
SW1
X2
XTALI
XTALO
8MHz
SW1 R59 100R 0402
SW2 R60 100R 0402
SW3 R68 100R 0402
S2
TM-2103
P1
MCU_SWDIO
MCU_SWCLK
A1002WV-S-4P
VSW
L6
0.73A
10uH
UHP252010NF-100M
C24
10V
0402
2.2uF
C25
16V
0402
100nF
C26
10V
0402
10uF
C27
16V
0402
100nF
D14
D15
LED1
LED2
R64 4.7K 0402
R62 4.7K 0402
绿色0603

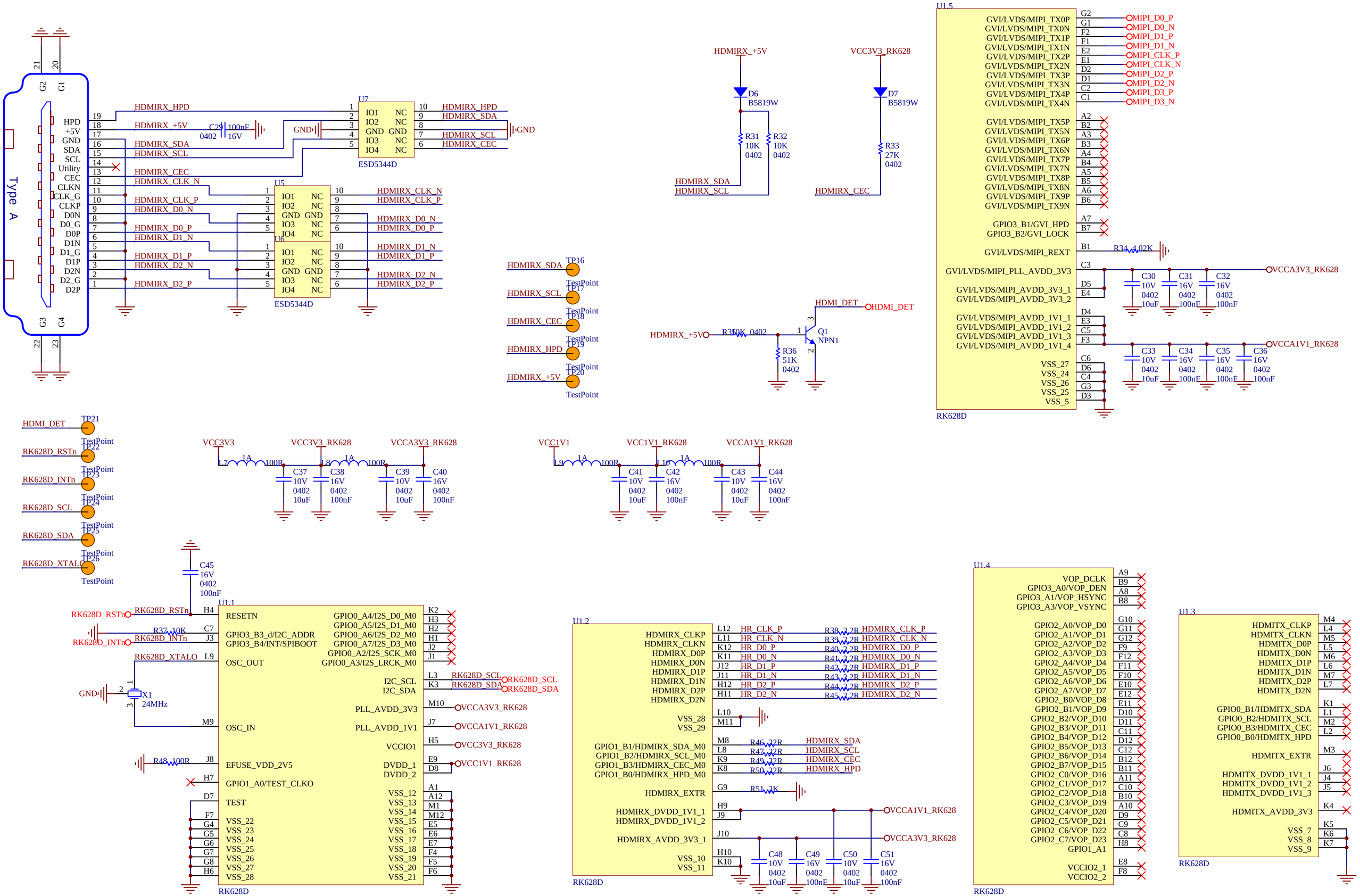
Type A
HPD
+5V
GND
SDA
SCL
Utility
CEC
CLKN
CLK_G
CLKP
D0N
D0_G
D0P
D1N
D1_G
D1P
D2N
D2_G
D2P
HDMIRX_HPD
HDMIRX_+5V
HDMIRX_SDA
HDMIRX_SCL
HDMIRX_CEC
HDMIRX_CLK_N
HDMIRX_CLK_P
HDMIRX_D0_N
HDMIRX_D0_P
HDMIRX_D1_N
HDMIRX_D1_P
HDMIRX_D2_N
HDMIRX_D2_P
C29 100nF 16V 0402
GND
U7
ESD5344D
U5
U6
ESD5344D
HDMIRX_+5V
D6 B5819W
R31 10K 0402
R32 10K 0402
VCC3V3_RK628
D7 B5819W
R33 27K 0402
HDMIRX_SDA
HDMIRX_SCL
HDMIRX_CEC
TP16
TP17
TP18
TP19
TP20
TestPoint
HDMI_DET
HDMIRX_+5V
R35 10K 0402
R36 51K 0402
Q1 NPN1
HDMI_DET
U1.5
RK628D
GVI/LVDS/MIPI_TX0P
GVI/LVDS/MIPI_TX0N
GVI/LVDS/MIPI_TX1P
GVI/LVDS/MIPI_TX1N
GVI/LVDS/MIPI_TX2P
GVI/LVDS/MIPI_TX2N
GVI/LVDS/MIPI_TX3P
GVI/LVDS/MIPI_TX3N
GVI/LVDS/MIPI_TX4P
GVI/LVDS/MIPI_TX4N
MIPI_D0_P
MIPI_D0_N
MIPI_D1_P
MIPI_D1_N
MIPI_CLK_P
MIPI_CLK_N
MIPI_D2_P
MIPI_D2_N
MIPI_D3_P
MIPI_D3_N
GVI/LVDS/MIPI_TX5P
GVI/LVDS/MIPI_TX5N
GVI/LVDS/MIPI_TX6P
GVI/LVDS/MIPI_TX6N
GVI/LVDS/MIPI_TX7P
GVI/LVDS/MIPI_TX7N
GVI/LVDS/MIPI_TX8P
GVI/LVDS/MIPI_TX8N
GVI/LVDS/MIPI_TX9P
GVI/LVDS/MIPI_TX9N
GPIO3_B1/GVI_HPD
GPIO3_B2/GVI_LOCK
GVI/LVDS/MIPI_REXT
R34 4.02K
GVI/LVDS/MIPI_PLL_AVDD_3V3
GVI/LVDS/MIPI_AVDD_3V3_1
GVI/LVDS/MIPI_AVDD_3V3_2
GVI/LVDS/MIPI_AVDD_1V1_1
GVI/LVDS/MIPI_AVDD_1V1_2
GVI/LVDS/MIPI_AVDD_1V1_3
GVI/LVDS/MIPI_AVDD_1V1_4
VSS_27
VSS_24
VSS_26
VSS_25
VSS_5
VCCA3V3_RK628
VCCA1V1_RK628
C30 10V 0402 10uF
C31 16V 0402 100nF
C32 16V 0402 100nF
C33 10V 0402 10uF
C34 16V 0402 100nF
C35 16V 0402 100nF
C36 16V 0402 100nF
HDMI_DET
TP21
RK628D_RSTn
RK628D_INTn
RK628D_SCL
RK628D_SDA
RK628D_XTALO
TP22
TP23
TP24
TP25
TP26
VCC3V3
VCC3V3_RK628
VCCA3V3_RK628
L7 1A 100R
L8 1A 100R
C37 10V 0402 10uF
C38 16V 0402 100nF
C39 10V 0402 10uF
C40 16V 0402 100nF
VCC1V1
VCC1V1_RK628
VCCA1V1_RK628
L9 1A 100R
L10 1A 100R
C41 10V 0402 10uF
C42 16V 0402 100nF
C43 10V 0402 10uF
C44 16V 0402 100nF
C45 16V 0402 100nF
U1.1
RK628D
RESETN
GPIO3_B3_d/I2C_ADDR
GPIO3_B4/INT/SPIBOOT
OSC_OUT
OSC_IN
EFUSE_VDD_2V5
GPIO1_A0/TEST_CLKO
TEST
VSS_22
VSS_23
VSS_24
VSS_25
VSS_26
VSS_27
VSS_28
GPIO0_A4/I2S_D0_M0
GPIO0_A5/I2S_D1_M0
GPIO0_A6/I2S_D2_M0
GPIO0_A7/I2S_D3_M0
GPIO0_A2/I2S_SCK_M0
GPIO0_A3/I2S_LRCK_M0
I2C_SCL
I2C_SDA
PLL_AVDD_3V3
PLL_AVDD_1V1
VCCIO1
DVDD_1
DVDD_2
VSS_12
VSS_13
VSS_14
VSS_15
VSS_16
VSS_17
VSS_18
VSS_19
VSS_20
VSS_21
R37 10K
R48 100R
X1 24MHz
U1.2
RK628D
HDMIRX_CLKP
HDMIRX_CLKN
HDMIRX_D0P
HDMIRX_D0N
HDMIRX_D1P
HDMIRX_D1N
HDMIRX_D2P
HDMIRX_D2N
VSS_28
VSS_29
GPIO1_B1/HDMIRX_SDA_M0
GPIO1_B2/HDMIRX_SCL_M0
GPIO1_B3/HDMIRX_CEC_M0
GPIO1_B0/HDMIRX_HPD_M0
HDMIRX_EXTR
HDMIRX_DVDD_1V1_1
HDMIRX_DVDD_1V1_2
HDMIRX_AVDD_3V3_1
VSS_10
VSS_11
HR_CLK_P
HR_CLK_N
HR_D0_P
HR_D0_N
HR_D1_P
HR_D1_N
HR_D2_P
HR_D2_N
R38 2.2R
R39 2.2R
R40 2.2R
R41 2.2R
R42 2.2R
R43 2.2R
R44 2.2R
R45 2.2R
R46 22R
R47 22R
R49 22R
R50 22R
R51 2K
C48 10V 0402 10uF
C49 16V 0402 100nF
C50 10V 0402 10uF
C51 16V 0402 100nF
U1.4
RK628D
VOP_DCLK
GPIO3_A0/VOP_DEN
GPIO3_A1/VOP_HSYNC
GPIO3_A3/VOP_VSYNC
GPIO2_A0/VOP_D0
GPIO2_A1/VOP_D1
GPIO2_A2/VOP_D2
GPIO2_A3/VOP_D3
GPIO2_A4/VOP_D4
GPIO2_A5/VOP_D5
GPIO2_A6/VOP_D6
GPIO2_A7/VOP_D7
GPIO2_B0/VOP_D8
GPIO2_B1/VOP_D9
GPIO2_B2/VOP_D10
GPIO2_B3/VOP_D11
GPIO2_B4/VOP_D12
GPIO2_B5/VOP_D13
GPIO2_B6/VOP_D14
GPIO2_B7/VOP_D15
GPIO2_C0/VOP_D16
GPIO2_C1/VOP_D17
GPIO2_C2/VOP_D18
GPIO2_C3/VOP_D19
GPIO2_C4/VOP_D20
GPIO2_C5/VOP_D21
GPIO2_C6/VOP_D22
GPIO2_C7/VOP_D23
GPIO1_A1
VCCIO2_1
VCCIO2_2
U1.3
RK628D
HDMITX_CLKP
HDMITX_CLKN
HDMITX_D0P
HDMITX_D0N
HDMITX_D1P
HDMITX_D1N
HDMITX_D2P
HDMITX_D2N
GPIO0_B1/HDMITX_SDA
GPIO0_B2/HDMITX_SCL
GPIO0_B3/HDMITX_CEC
GPIO0_B0/HDMITX_HPD
HDMITX_EXTR
HDMITX_DVDD_1V1_1
HDMITX_DVDD_1V1_2
HDMITX_DVDD_1V1_3
HDMITX_AVDD_3V3
VSS_7
VSS_8
VSS_9

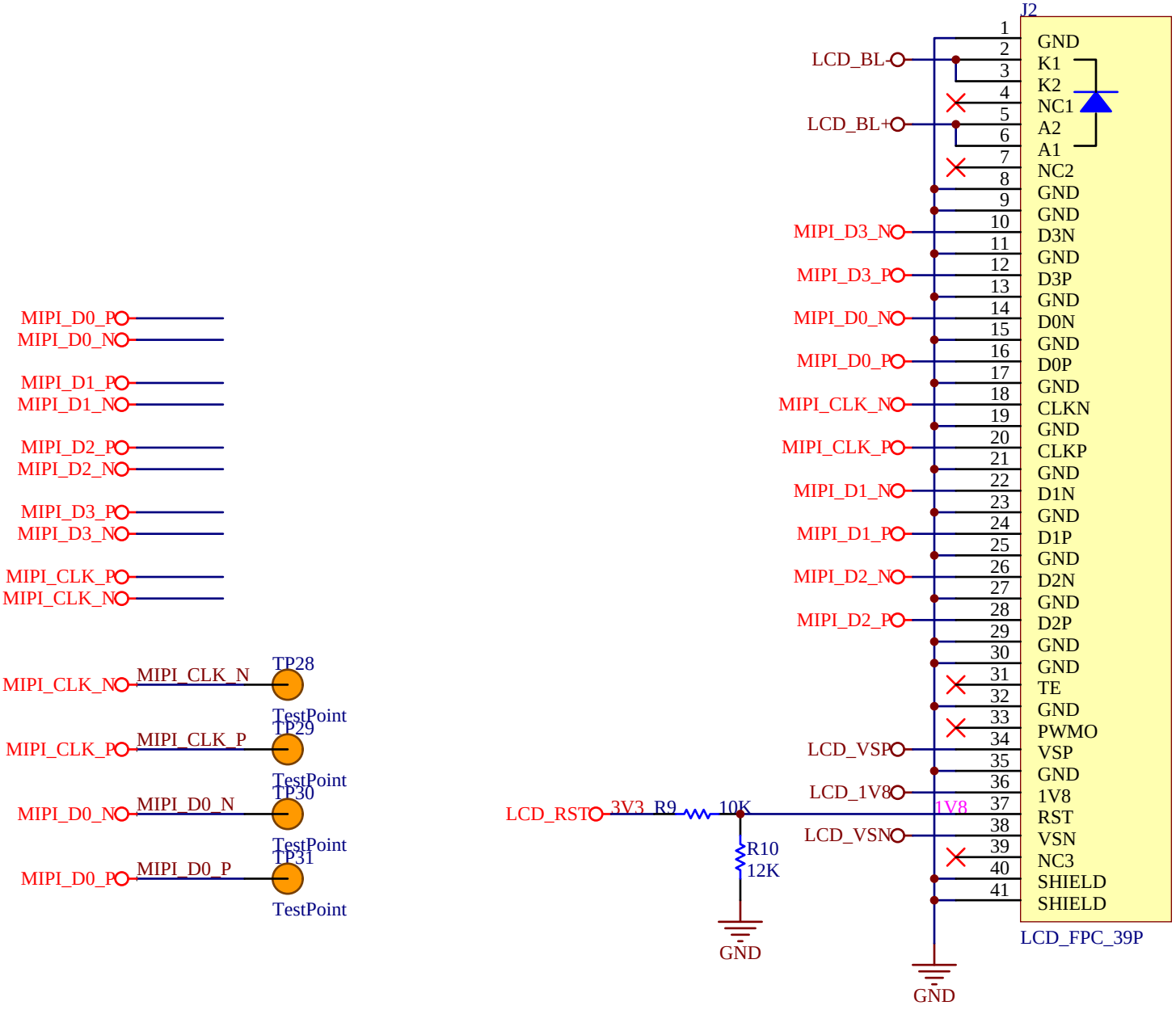
J2
LCD_FPC_39P
1 GND
2 K1
3 K2
4 NC1
5 A2
6 A1
7 NC2
8 GND
9 GND
10 D3N
11 GND
12 D3P
13 GND
14 D0N
15 GND
16 D0P
17 GND
18 CLKN
19 GND
20 CLKP
21 GND
22 D1N
23 GND
24 D1P
25 GND
26 D2N
27 GND
28 D2P
29 GND
30 GND
31 TE
32 GND
33 PWMO
34 VSP
35 GND
36 1V8
37 RST
38 VSN
39 NC3
40 SHIELD
41 SHIELD
LCD_BL-
LCD_BL+
MIPI_D3_N
MIPI_D3_P
MIPI_D0_N
MIPI_D0_P
MIPI_CLK_N
MIPI_CLK_P
MIPI_D1_N
MIPI_D1_P
MIPI_D2_N
MIPI_D2_P
LCD_VSP
LCD_1V8
LCD_VSN
LCD_RST
3V3_R9
10K
1V8
R10
12K
GND
GND
MIPI_D0_P
MIPI_D0_N
MIPI_D1_P
MIPI_D1_N
MIPI_D2_P
MIPI_D2_N
MIPI_D3_P
MIPI_D3_N
MIPI_CLK_P
MIPI_CLK_N
MIPI_CLK_N
MIPI_CLK_N
TP28
TestPoint
MIPI_CLK_P
MIPI_CLK_P
TP29
TestPoint
MIPI_D0_N
MIPI_D0_N
TP30
TestPoint
MIPI_D0_P
MIPI_D0_P
TP31
TestPoint

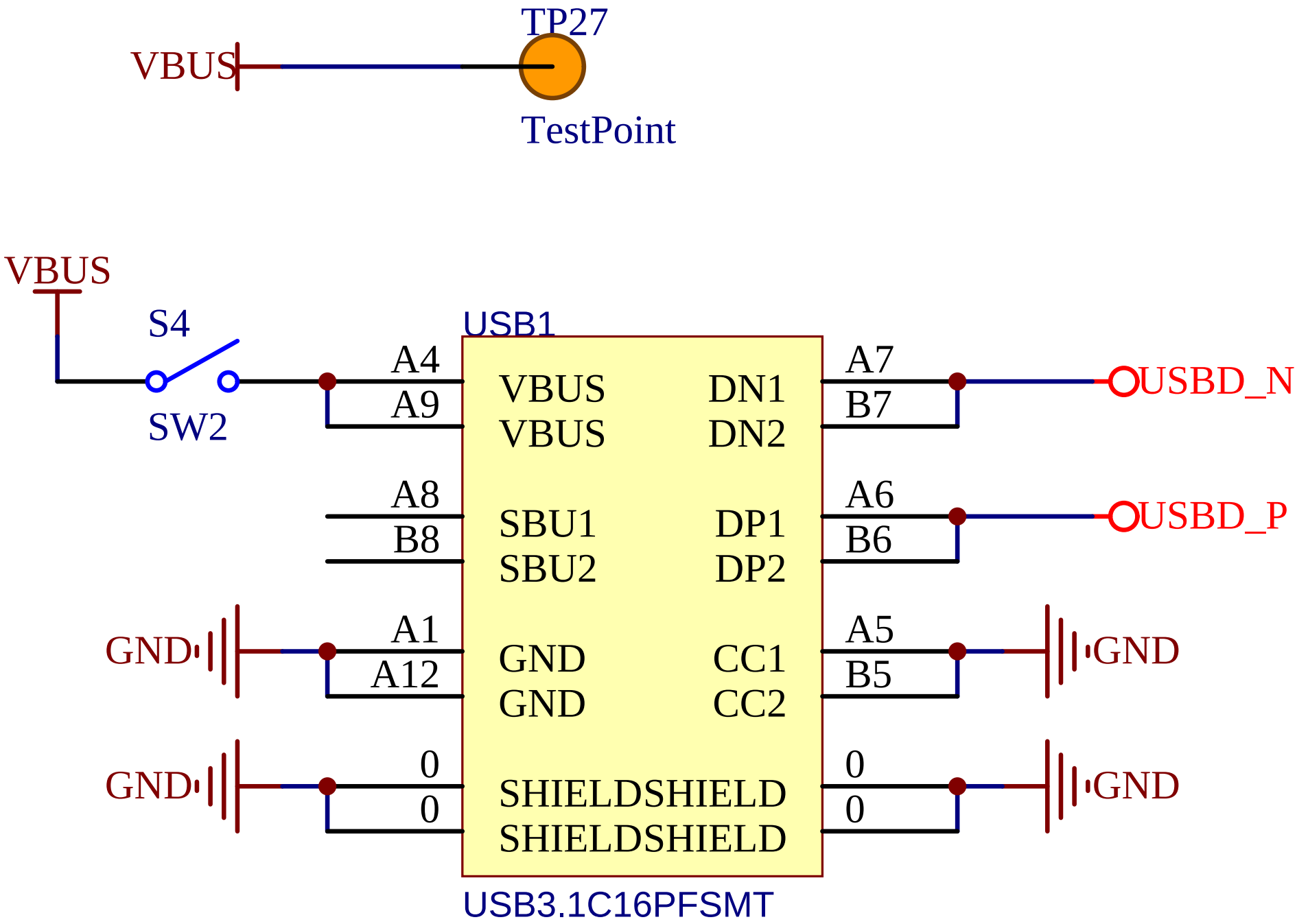
VBUS
TP27
TestPoint
VBUS
S4
SW2
USB1
A4
A9
A8
B8
A1
A12
0
0
VBUS
VBUS
SBU1
SBU2
GND
GND
SHIELDSHIELD
SHIELDSHIELD
DN1
DN2
DP1
DP2
CC1
CC2
A7
B7
A6
B6
A5
B5
0
0
USBD_N
USBD_P
GND
GND
GND
GND
USB3.1C16PFSMT

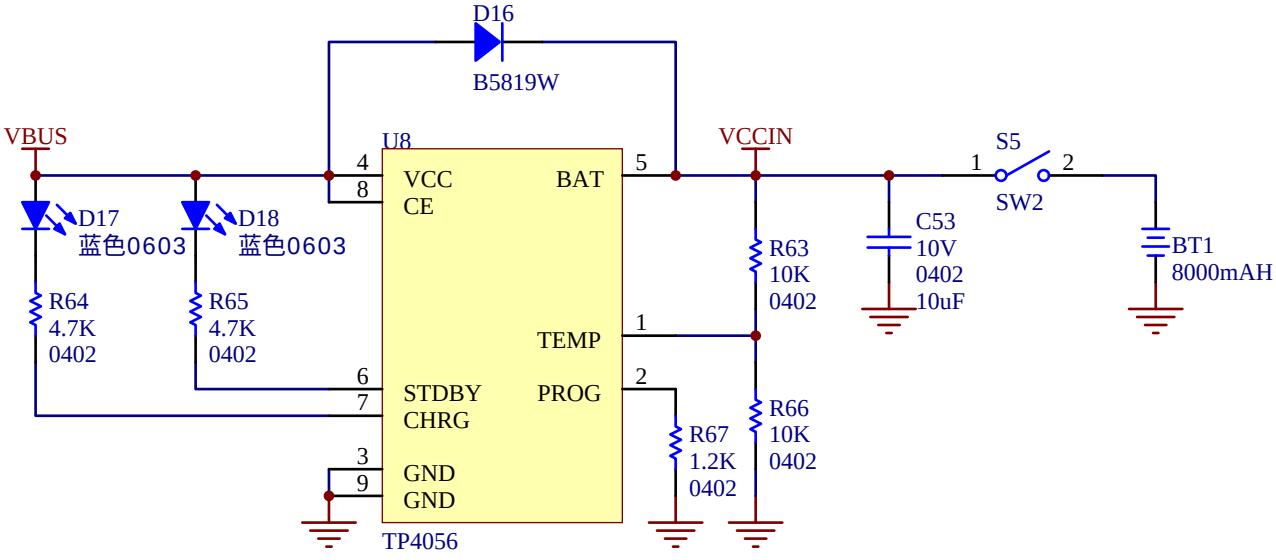
D16
B5819W
VBUS
U8
VCCIN
S5
SW2
D17
蓝色0603
D18
蓝色0603
VCC
CE
BAT
TEMP
STDBY
CHRG
PROG
GND
GND
TP4056
R64
4.7K
0402
R65
4.7K
0402
R63
10K
0402
R66
10K
0402
R67
1.2K
0402
C53
10V
0402
10uF
BT1
8000mAH