MgcSTEM 7f97e121-c03e-4f22-97e6-13224b8cd3e9

Manuals+ Q & A | Deep Search | Upload

Instruction Manual for MgcSTEM Low Voltage Disconnect and Charging/Discharging Protection Board

Model: 7f97e121-c03e-4f22-97e6-13224b8cd3e9
Brand: MgcSTEM

1. Product Overview

The MgcSTEM Low Voltage Disconnect and Charging/Discharging Protection Board is a versatile 2-in-1 module designed for battery management. It offers both battery overcharge protection (charging mode) and battery low voltage protection (discharging mode). This board is suitable for various applications, including solar charging systems, where automatic battery disconnection based on set voltage levels is required.
This device ensures the longevity and safe operation of your battery by preventing overcharging and deep discharging.

2. Key Features

- **2-in-1 Functionality:** Supports both charging mode (battery overcharge protection) and discharging mode (battery low voltage protection).

- **Dual Low-Power Modes:** Features an automatic mode and a manual mode. In manual mode, the relay consumes 0 power after disconnection, requiring a manual button reset.
- **Automatic Mode Efficiency:** In automatic mode, the relay enters a low-power state after disconnecting (LED turns off after 60s without button action). Standby current is approximately 5mA (at 18V), and the device automatically restarts when the voltage is restored.
- **Memory Function:** Equipped with an internal flash storage module, ensuring all settings are retained even after a power off.
- **High Current & Voltage Support:** Capable of handling a maximum of 40A current and operating with voltages from 5V to 60V.
- **Adjustable Delays & Timer:** Supports a 99-second start delay, a 99-second disconnect delay, and a comprehensive 99:59:59 hours timer disconnect timer.

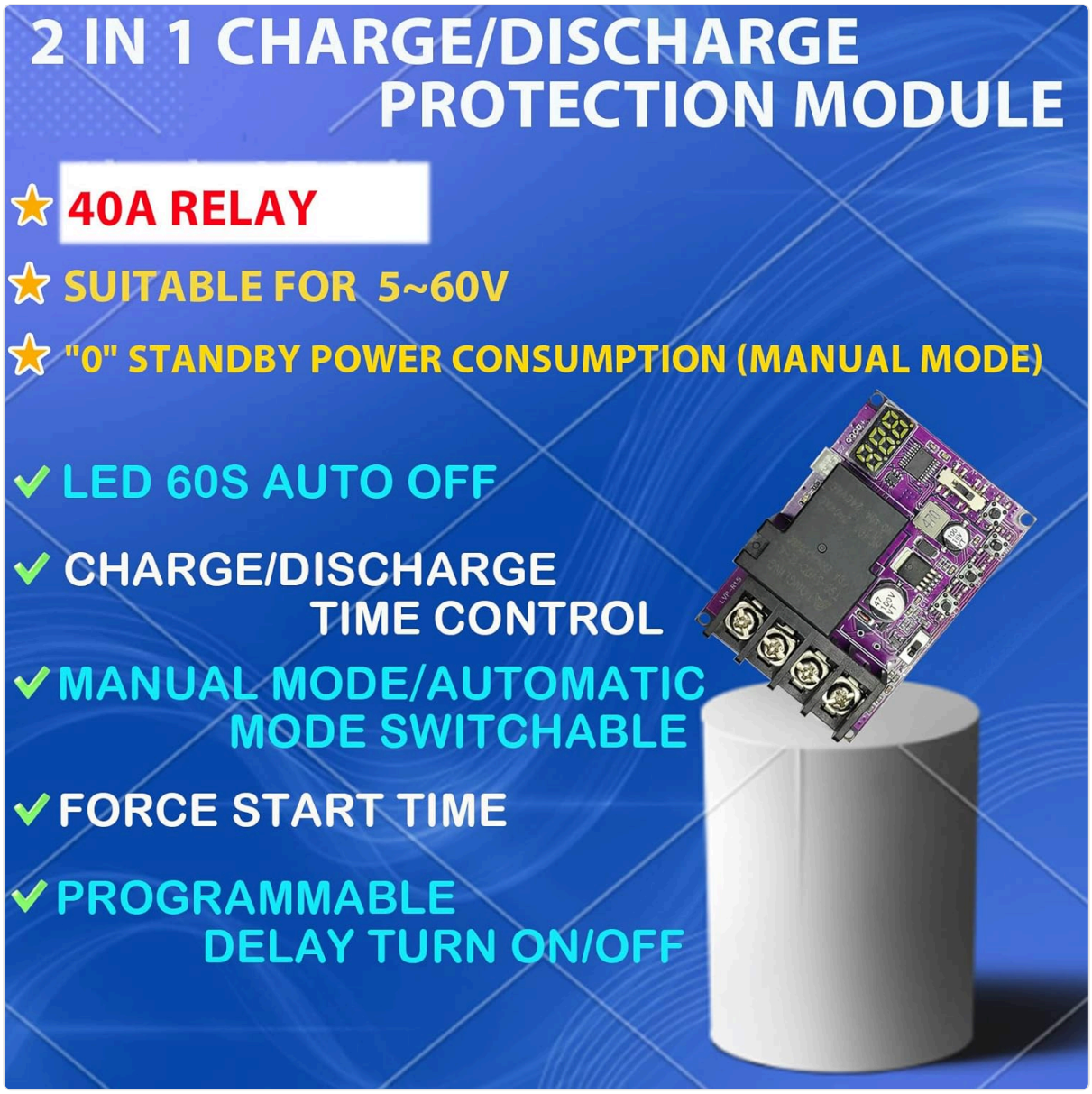

Figure 2.1: Visual representation of the module's key features.

This image illustrates the core functionalities of the MgcSTEM protection board, emphasizing its dual-mode operation, 40A relay, wide voltage compatibility (5-60V), and low standby power consumption in manual mode. It also highlights features like LED auto-off, time control, mode switching, force start time, and programmable delays.

3. Components and Interface

The protection board features clearly labeled terminals and control buttons for easy setup and operation.

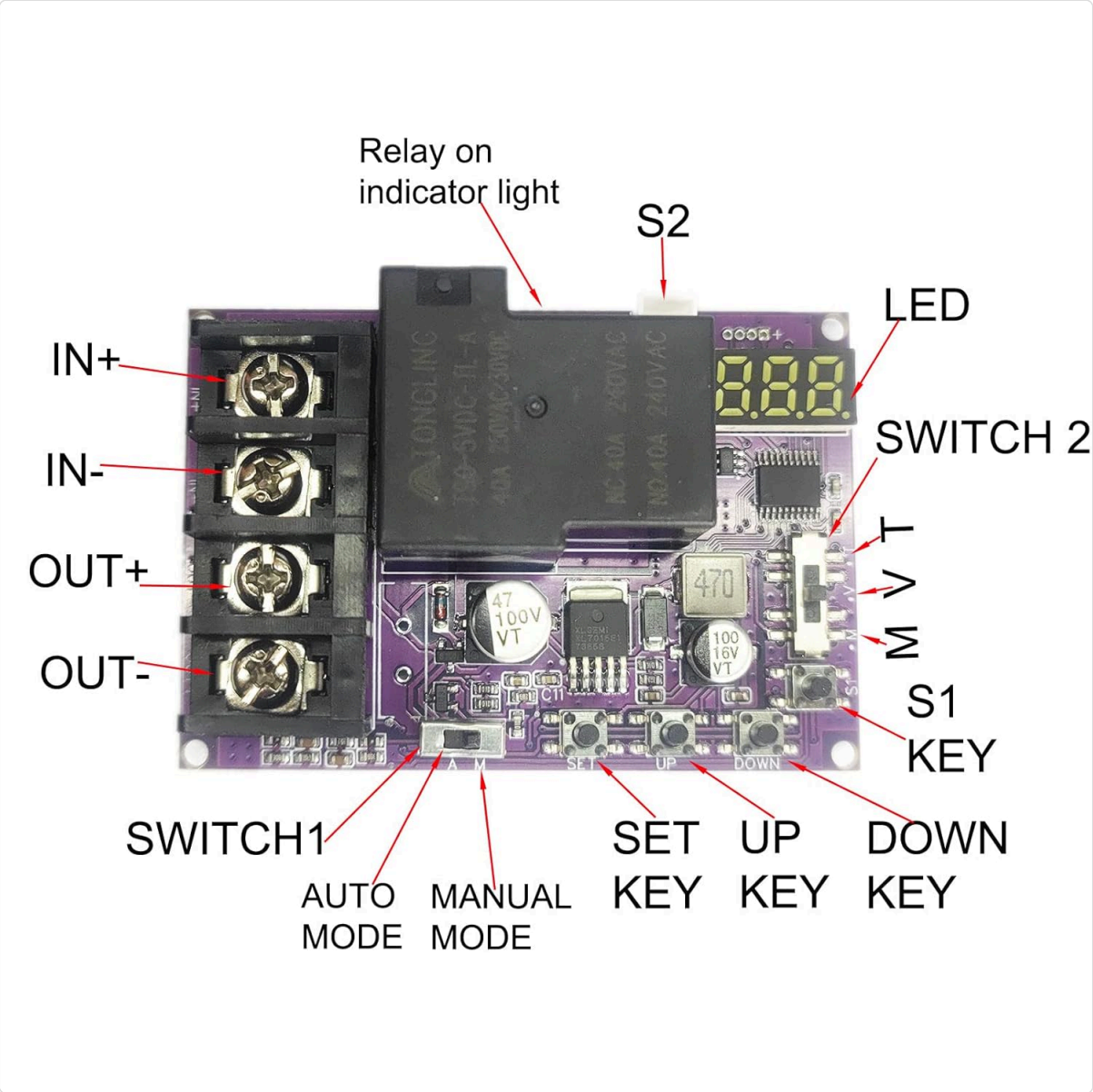

Figure 3.1: Detailed view of the board's interface.

This diagram identifies the main components and connection points of the board. Key elements include the IN+ and IN- terminals for power input, OUT+ and OUT- terminals for power output, an LED display for voltage readings, and control buttons (SET, UP, DOWN) for configuration. Additionally, SWITCH1 and SWITCH2 are present, along with an auto/manual mode switch and a relay on indicator light.

Physical Dimensions

Figure 3.2: Board dimensions and wire compatibility.

The board measures approximately 70mm in length, 48mm in width, and 27mm in height. The screw terminals are designed to accommodate wire gauges such as 10AWG, 12AWG, and 14AWG, ensuring robust connections for high current applications.

4. Installation Method

Proper wiring is crucial for the safe and effective operation of the protection board. Please refer to the following diagrams for connection details.

4.1. Discharge Mode Connection Diagram

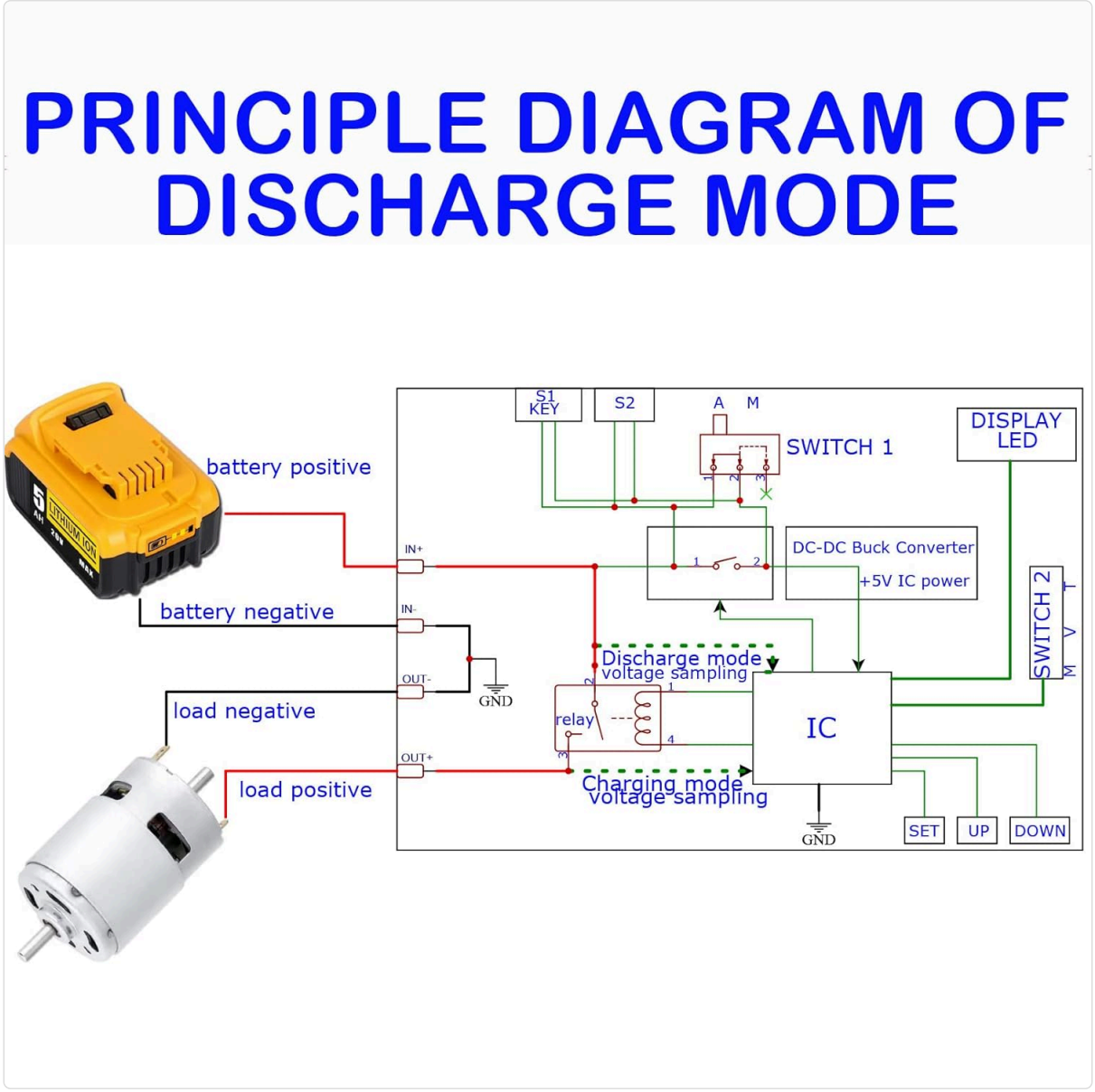

Figure 4.1: Discharge Mode Wiring.

This diagram illustrates how to connect the battery and the load (e.g., a motor) to the protection board for discharge mode operation. Ensure that the battery positive and negative terminals are connected to IN+ and IN- respectively, and the load positive and negative terminals are connected to OUT+ and OUT-.

4.2. Charging Mode Connection Diagram

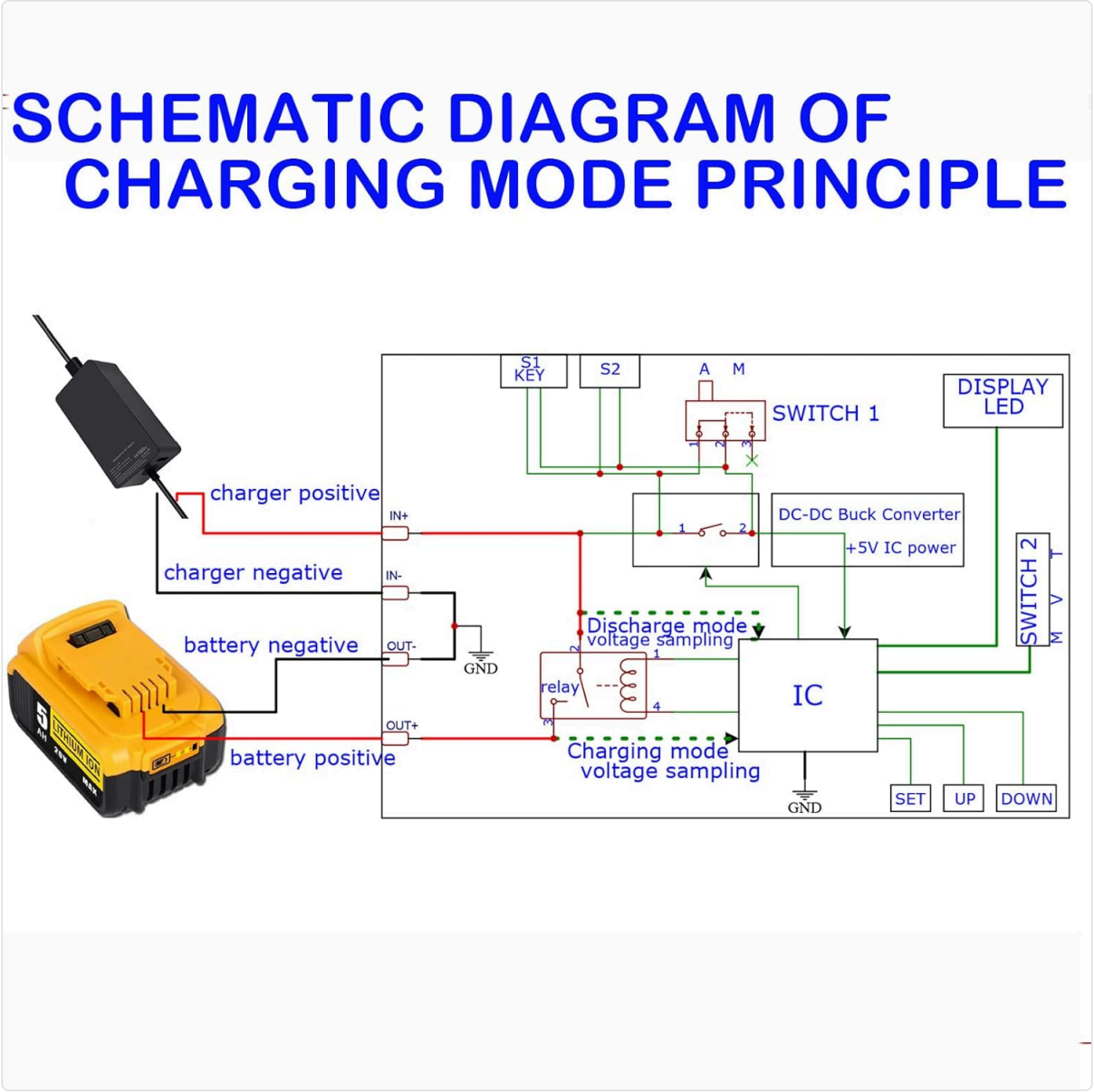

Figure 4.2: Charging Mode Wiring.

This diagram shows the connections for charging mode. The charger positive and negative terminals connect to IN+ and IN- respectively, and the battery positive and negative terminals connect to OUT+ and OUT-.

4.3. Combined Connection with PWM2.0A (Example)

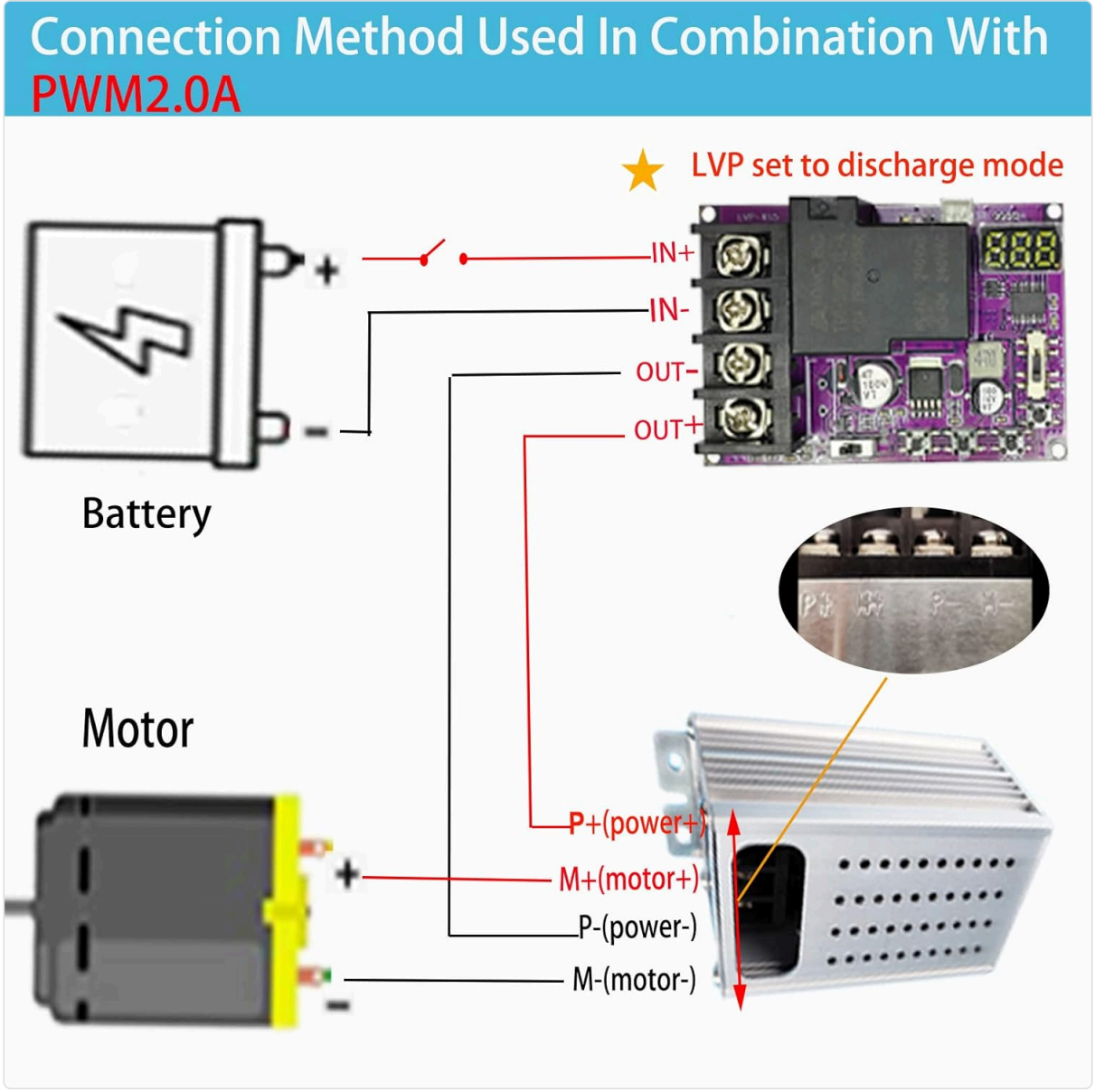

Figure 4.3: Example Combined Connection.

This diagram provides an example of how the LVP (Low Voltage Protection) board can be integrated with a PWM2.0A module, specifically set to discharge mode. It illustrates the wiring from the battery to the LVP board's input, and then from the LVP board's output to the PWM2.0A module, which in turn connects to a motor. This setup allows for controlled power delivery to the motor while ensuring battery protection.

5. Operation

5.1. Quickstart & Button Functions

- **Short Press:** Press a button and release it quickly.
- **Long Press:** Press and hold a button for 3 seconds, or keep it pressed until the desired number is set.

5.2. Switching Modes

The charging mode and discharging mode require specific button settings to switch between them before use. Refer to the detailed instructions provided with the product for the exact switching method.

- **Discharge Mode (Battery Low Voltage Protection):** The working voltage of the battery is 18V. When the battery voltage drops to 15V or less, the device will disconnect to prevent over-discharge. This is typically set as discharge mode 1.
- **Charging Mode (Battery Overcharge Protection):** The working voltage of the battery is 18V. When the battery voltage reaches 20V or more, the device will disconnect to prevent overcharge. This is typically set as charge mode 2.

6. Specifications

Attribute	Value
Package Dimensions	4.49 x 3.94 x 1.26 inches; 2.08 ounces
Item Model Number	7f97e121-c03e-4f22-97e6-13224b8cd3e9
Date First Available	April 18, 2023
Manufacturer	MgcSTEM
Current Rating	40 Amps
Connector Type	Screw
Number Of Contacts	40
Mounting Type	screw mount
Color	purple
Brand	MgcSTEM
Voltage	60 Volts
Number Of Poles	1

7. Warnings and Safety Information

- **Polarity:** Always ensure that the "IN+ IN- OUT+ OUT-" terminals are connected with the correct positive and negative poles of the battery. Reverse connection will cause damage to the product, battery, and charger.
- **Mode Selection:** The charging and discharging modes are distinct and require manual selection via button settings before use. Incorrect mode selection may lead to improper operation or damage.
- **Functionality:** This device is a charging/discharging controller for protection purposes. It is **not** a charger or a voltage converter. Ensure you use an appropriate charger or voltage source in

conjunction with this board.

8. Troubleshooting

If you encounter issues with your MgcSTEM protection board, consider the following general troubleshooting steps:

1. **Check Connections:** Verify all wiring connections are secure and correctly aligned with the positive and negative terminals as per the installation diagrams. Loose or incorrect connections are a common cause of malfunction.
2. **Verify Power Input:** Ensure that the input voltage is within the specified 5V-60V range and that the power source is stable.
3. **Confirm Mode Selection:** Double-check that the board is set to the correct operating mode (charging or discharging) for your application.
4. **Inspect for Damage:** Visually inspect the board for any signs of physical damage, burnt components, or loose solder joints.
5. **Consult Product Documentation:** For specific error codes or advanced troubleshooting, refer to the detailed manual or contact customer support.

9. Warranty and Support

For warranty information, technical support, or service inquiries, please contact MgcSTEM customer service through the retailer where the product was purchased. Keep your proof of purchase for warranty claims.
For additional resources and product updates, visit the official MgcSTEM store on Amazon: MgcSTEM Store.

Related Documents - 7f97e121-c03e-4f22-97e6-13224b8cd3e9

	Aqara Camera Hub G5 Pro (PoE) User Manual User manual for the Aqara Camera Hub G5 Pro (PoE), detailing its features, installation, setup, and specifications. The camera offers advanced AI functions, Zigbee and Thread hub capabilities, and an IP65 rating.
	Aqara Camera Hub G5 Pro (PoE) User Manual - Advanced Security and AI Features Comprehensive user manual for the Aqara Camera Hub G5 Pro (PoE), detailing its advanced features including true full-color night vision, AI detection (human, pet, package, vehicle), Zigbee hub functionality, and PoE/USB-C power options. Learn about installation, setup, indicator lights, and product specifications.

	Aqara Camera Hub G5 Pro (PoE) User Manual | Installation & Setup Guide User manual for the Aqara Camera Hub G5 Pro (PoE) smart camera. Provides detailed instructions on product features, installation, network setup, device binding, specifications, indicator lights, and safety warnings.
	Руководство пользователя Aqara Hub G5 Pro (PoE версия): установка, настройка, характеристики Полное руководство пользователя для камеры видеонаблюдения Aqara Hub G5 Pro (PoE версия), включая информацию об установке, подключении, функциях, технических характеристиках и устранении неполадок.
	Aqara G5 Pro (Gateway Version) Smart Camera User Manual Comprehensive user manual for the Aqara G5 Pro (Gateway Version) smart camera. Learn about its advanced features including 4K resolution, 133° wide-angle lens, PIR motion detection, AI capabilities, Zigbee/Thread hub functionality, and HomeKit integration. Includes installation guides, setup instructions, troubleshooting, and product specifications.
	Aqara G5 Pro (Gateway Version) Smart Camera User Manual Comprehensive user manual for the Aqara G5 Pro (Gateway Version) smart camera, detailing features, installation, setup, specifications, and warnings. Includes AI detection, Zigbee/Thread hub capabilities, and HomeKit integration.