Revision Table				
Rev.	Description	Date	ECO	Signed
A	Initial Release	2025-02-06	-	rm

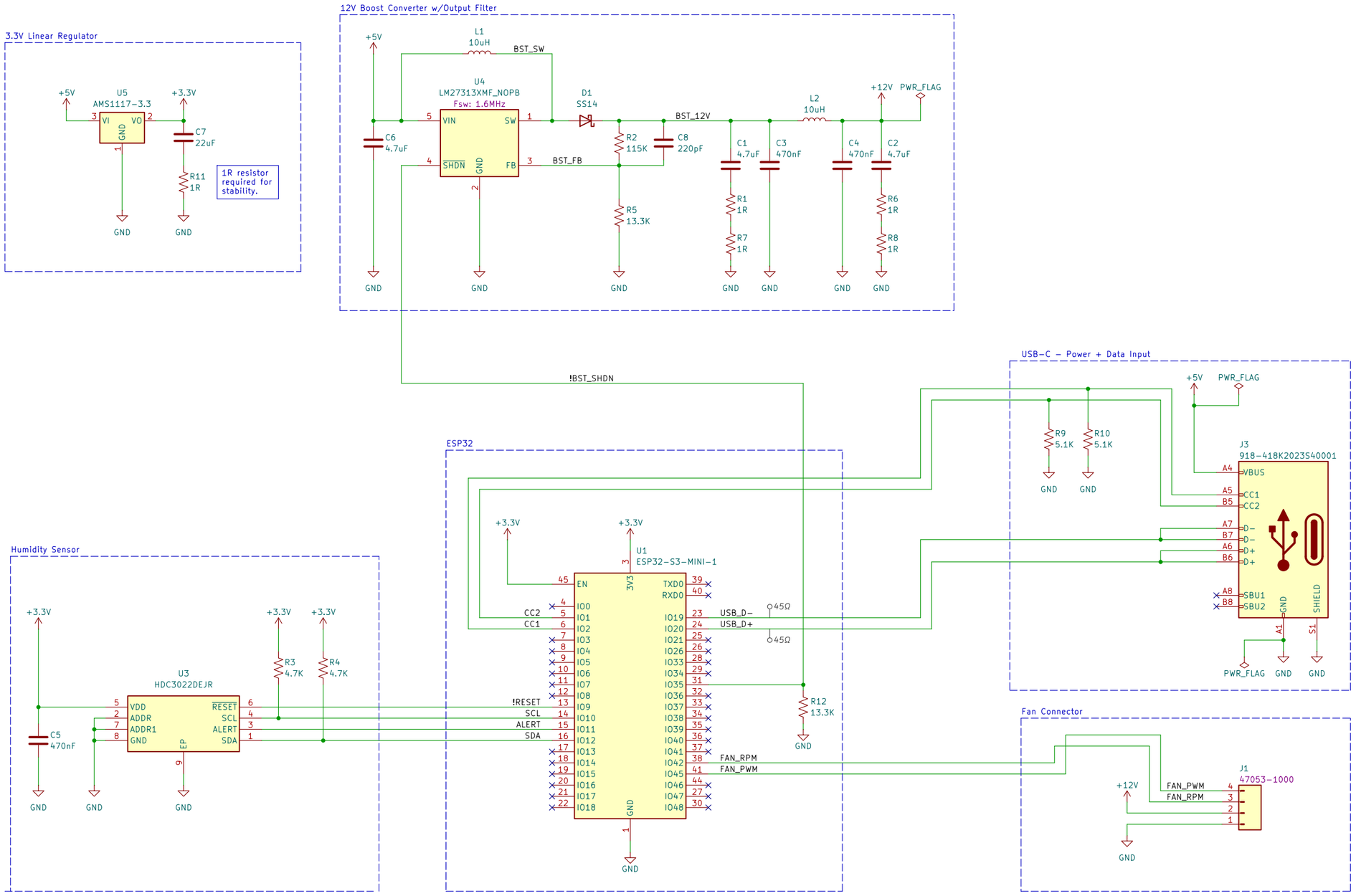

	Signature	Date	Document Number	RM DESIGNS
Drawn By.	r.m	2025-02-06	000001-SCH-A	
Chk. By.			Document Type: PCB Schematic	Title: Humidity Sensor Schematic
Apv. By.				
			Responsible dept.: Engineering	Rev.: A · Document Status: · Date of Issue: · Sheet: 1 of 1