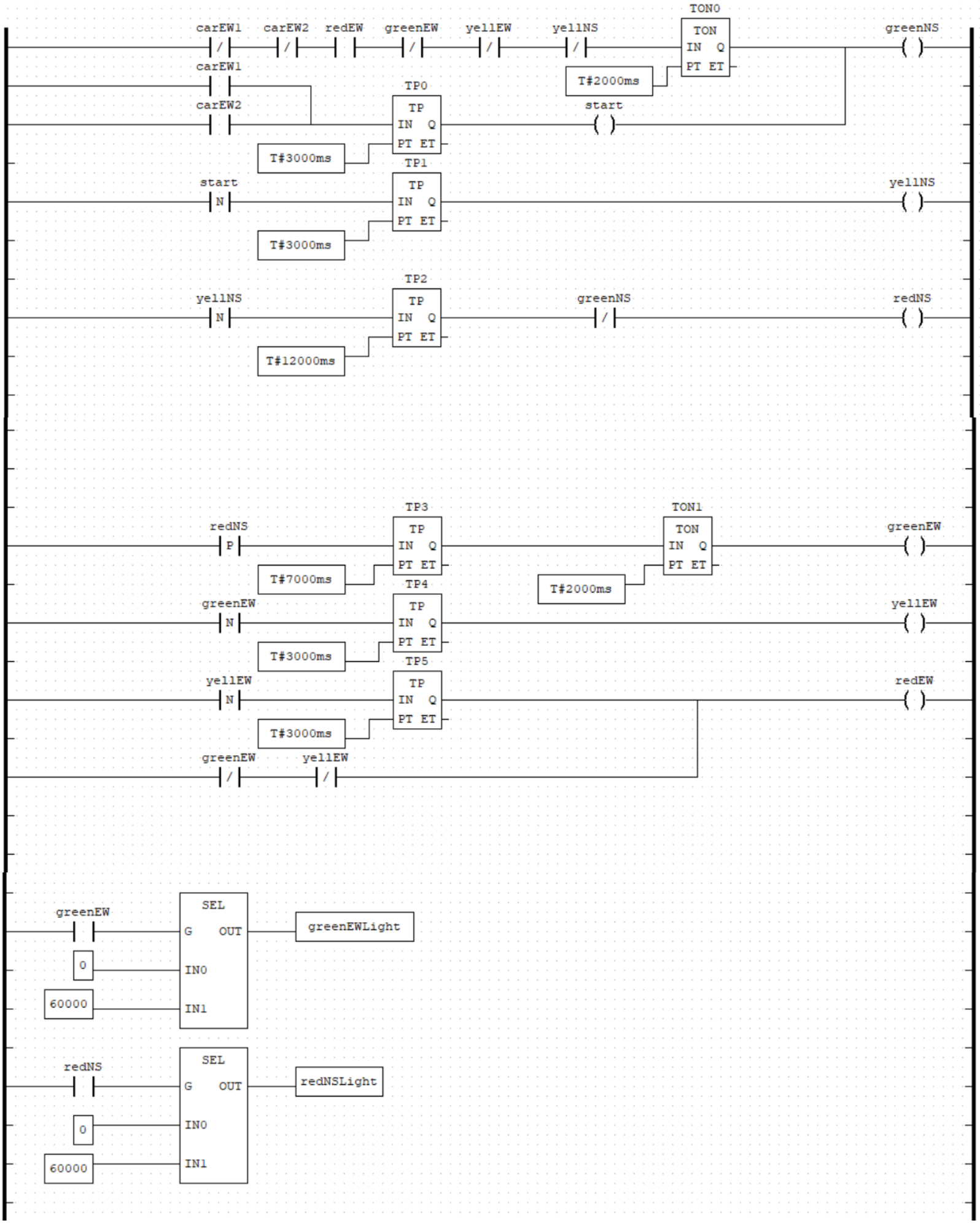
carEW1
carEW2
redEW
greenEW
yellEW
yellNS
TON0
TON
IN Q
PT ET
T#2000ms
greenNS
carEW1
carEW2
TP0
TP
IN Q
PT ET
T#3000ms
start
start
TP1
TP
IN Q
PT ET
T#3000ms
yellNS
yellNS
TP2
TP
IN Q
PT ET
T#12000ms
greenNS
redNS
redNS
TP3
TP
IN Q
PT ET
T#7000ms
TON1
TON
IN Q
PT ET
T#2000ms
greenEW
greenEW
TP4
TP
IN Q
PT ET
T#3000ms
yellEW
yellEW
TP5
TP
IN Q
PT ET
T#3000ms
redEW
greenEW
yellEW
greenEW
SEL
G OUT
IN0
IN1
0
60000
greenEWLight
redNS
SEL
G OUT
IN0
IN1
0
60000
redNSLight