ISTA 303: Assignment 2
Ultrasonic Sonar with Visualization
By Ryan Rizzo
October 19th, 2022

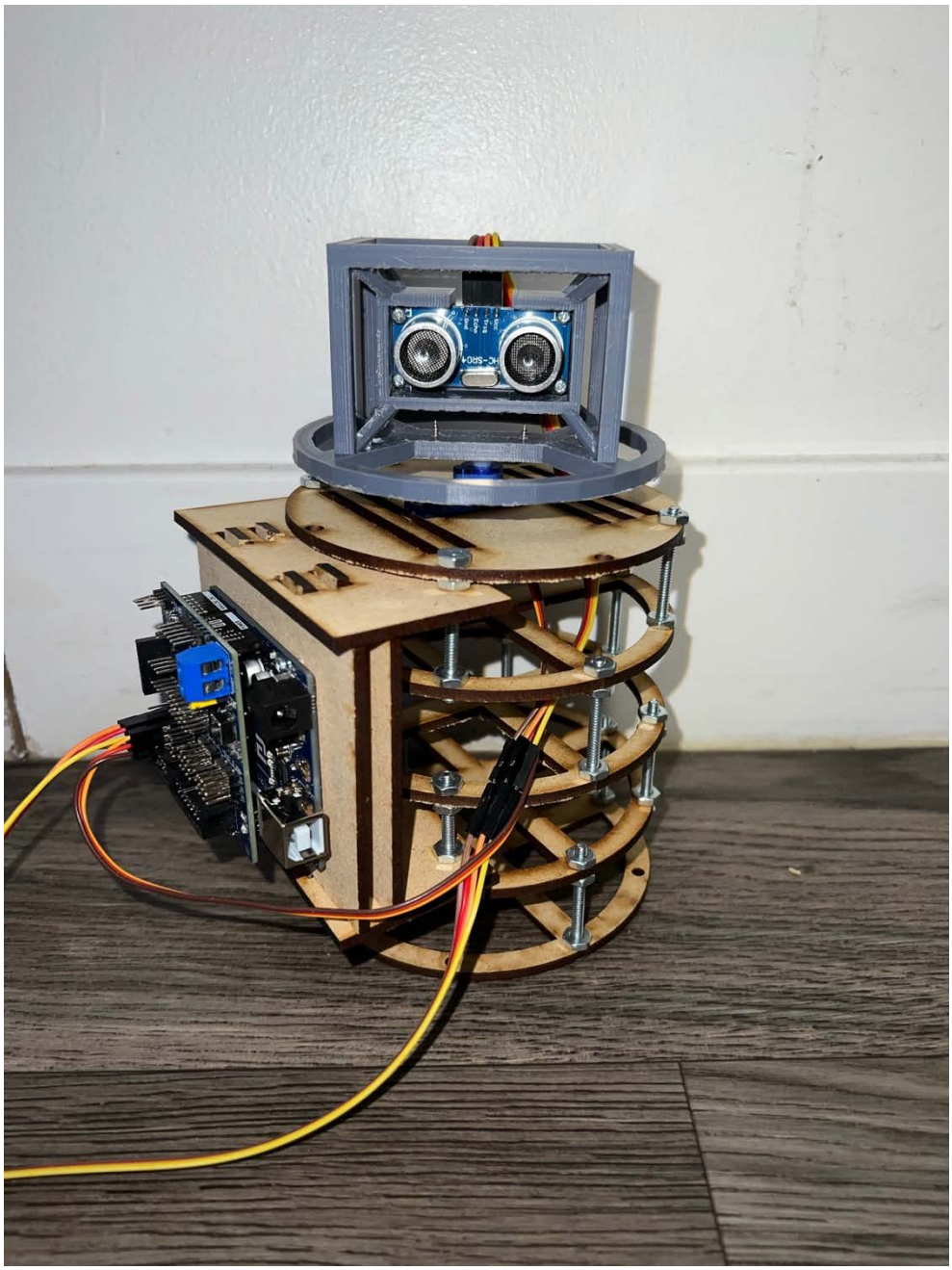

Preliminary

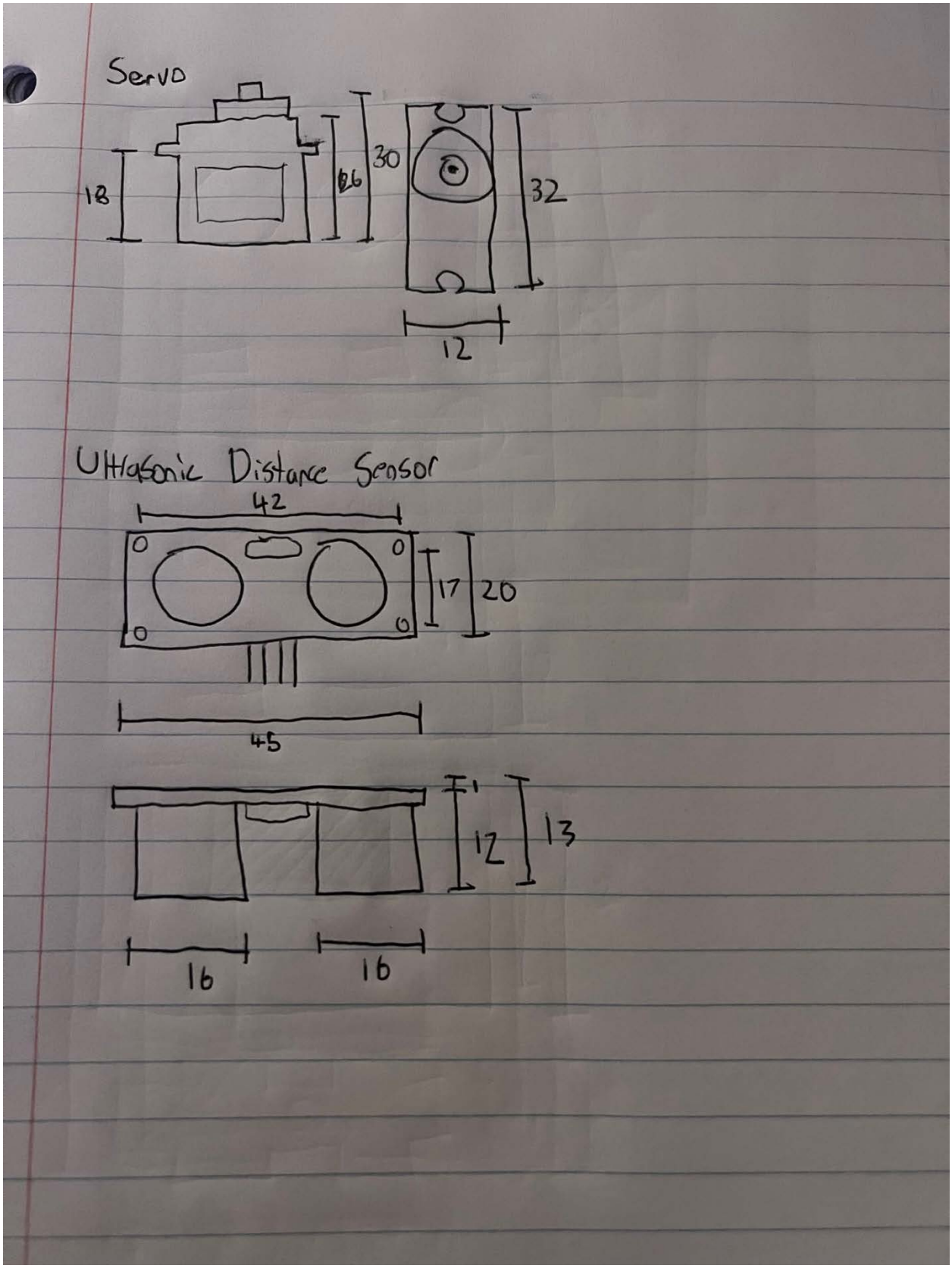

Part 1: 3D Foundations

Dimensional Drawing…

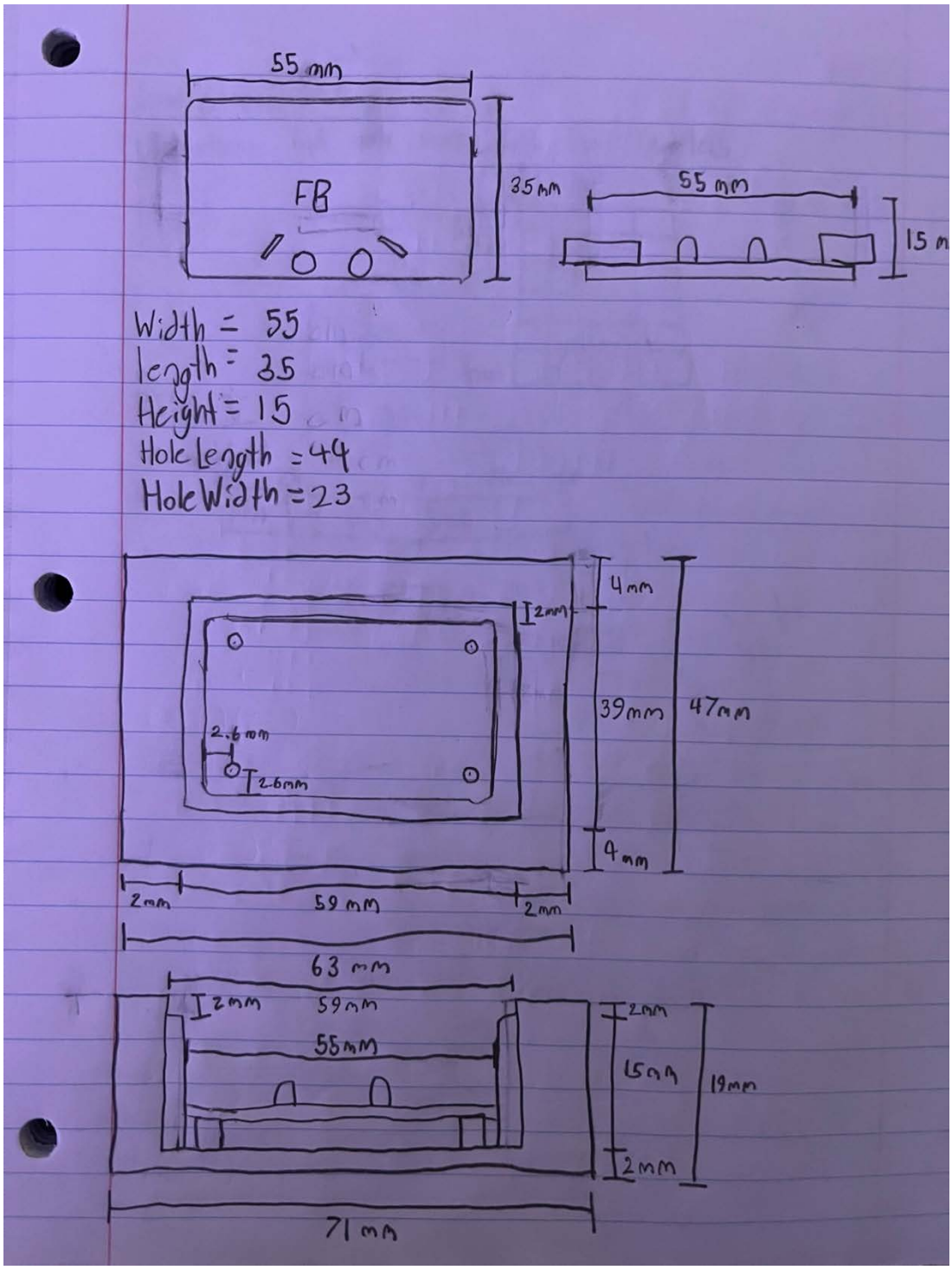

OpenSCAD…

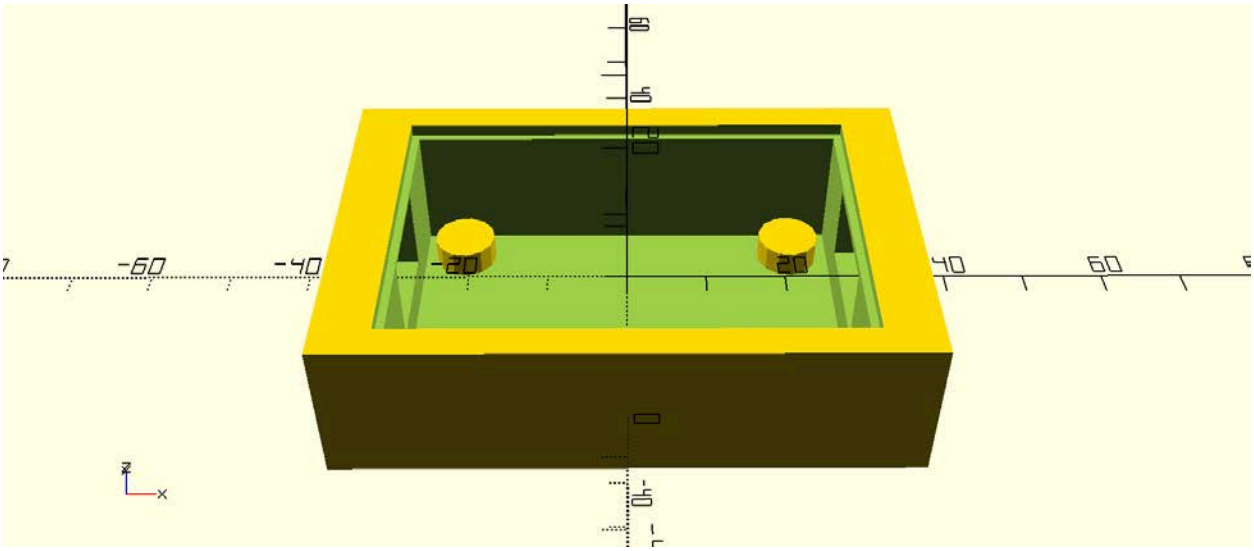

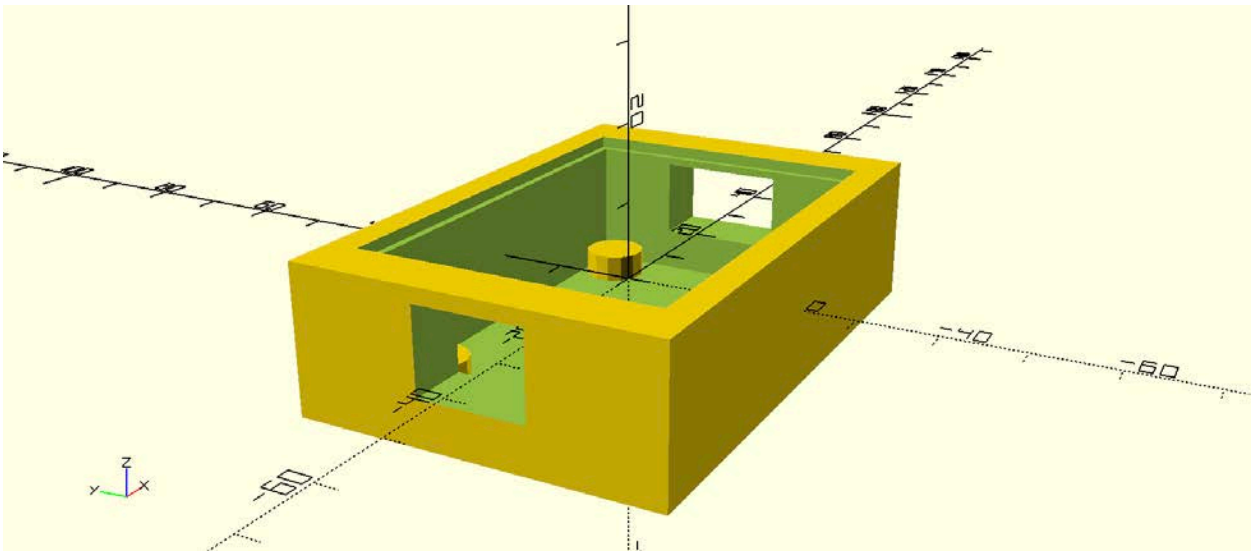

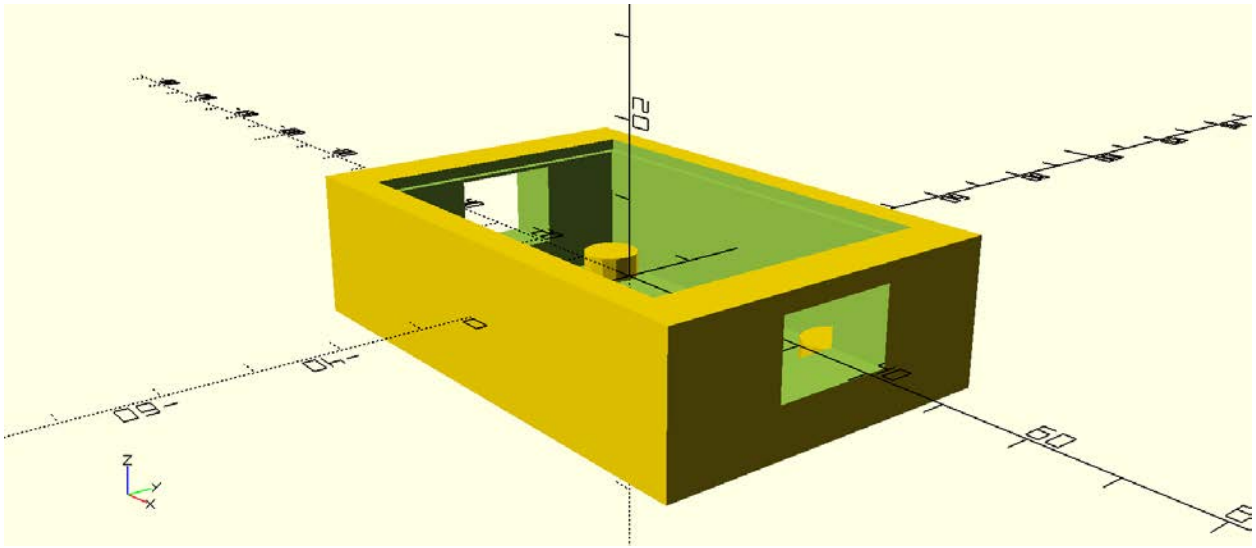

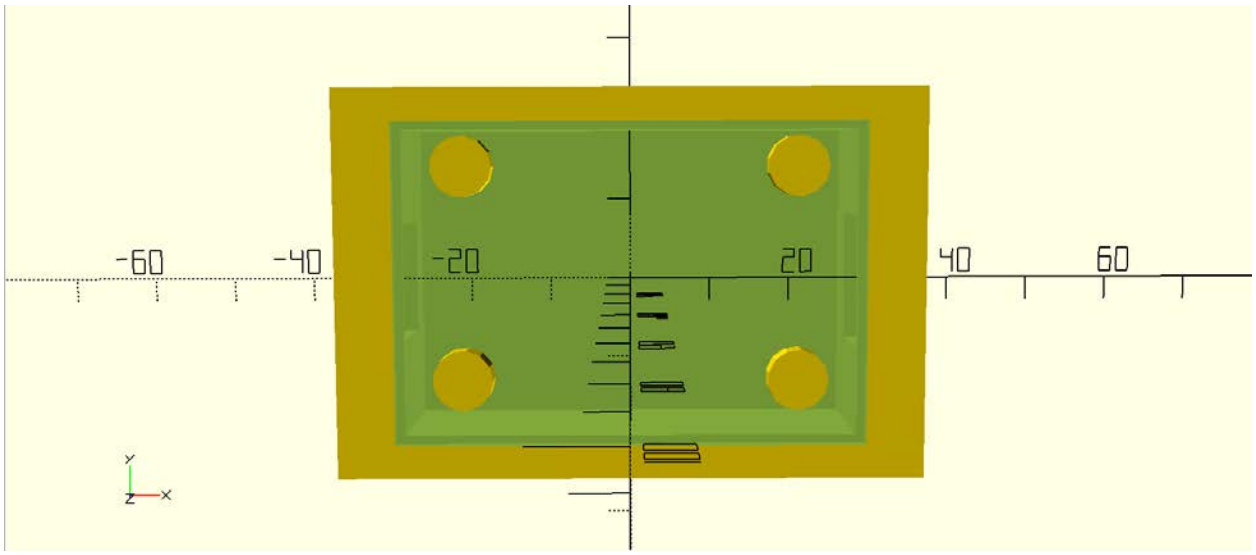
-60
-40
-20
20
40
60

Sketchup

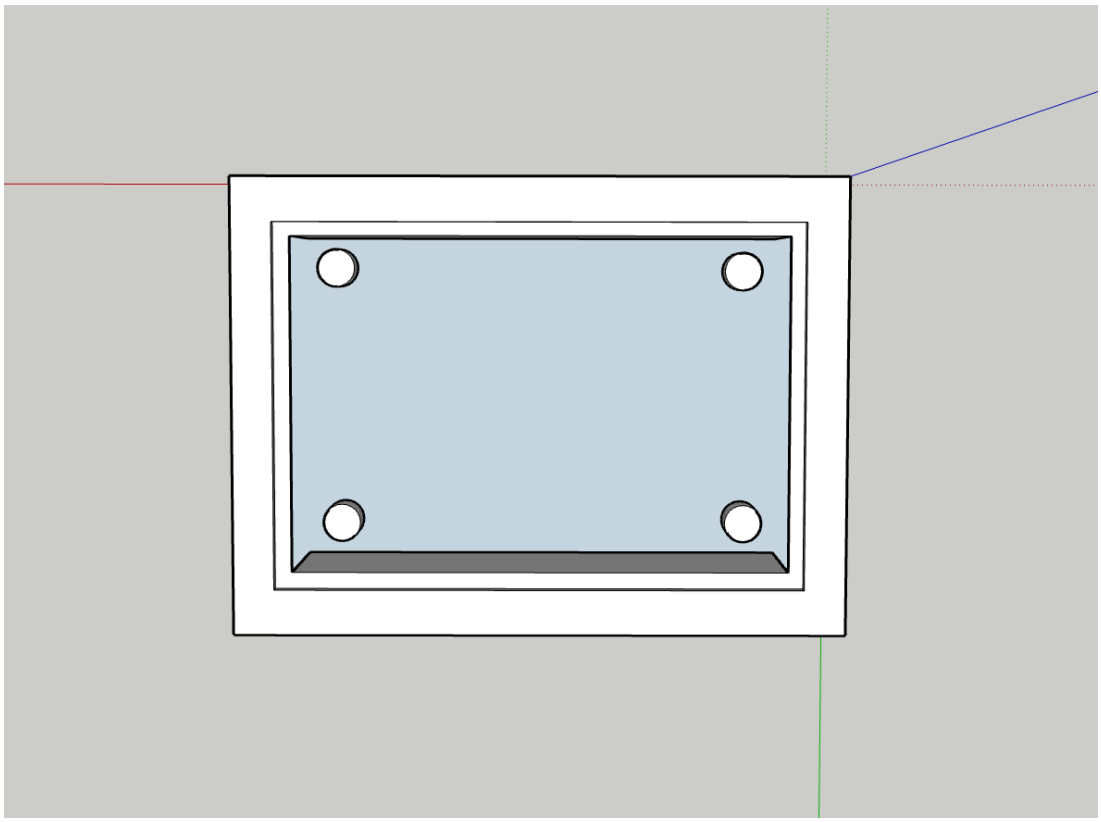

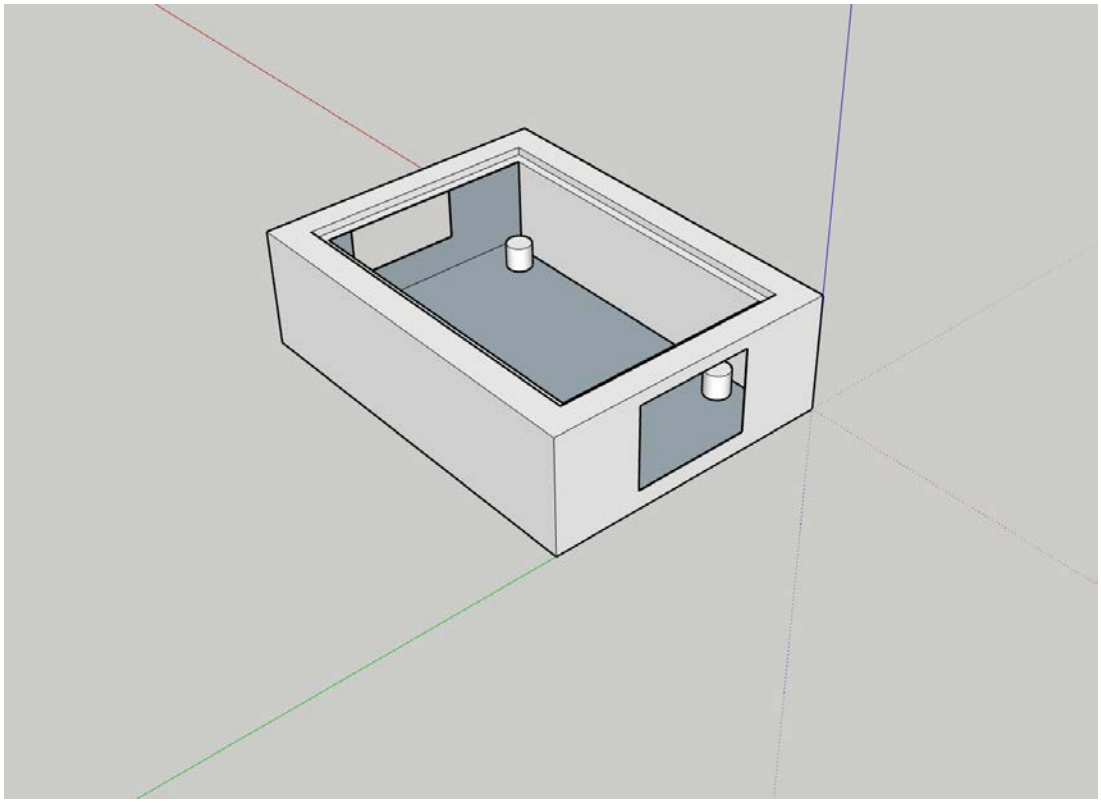

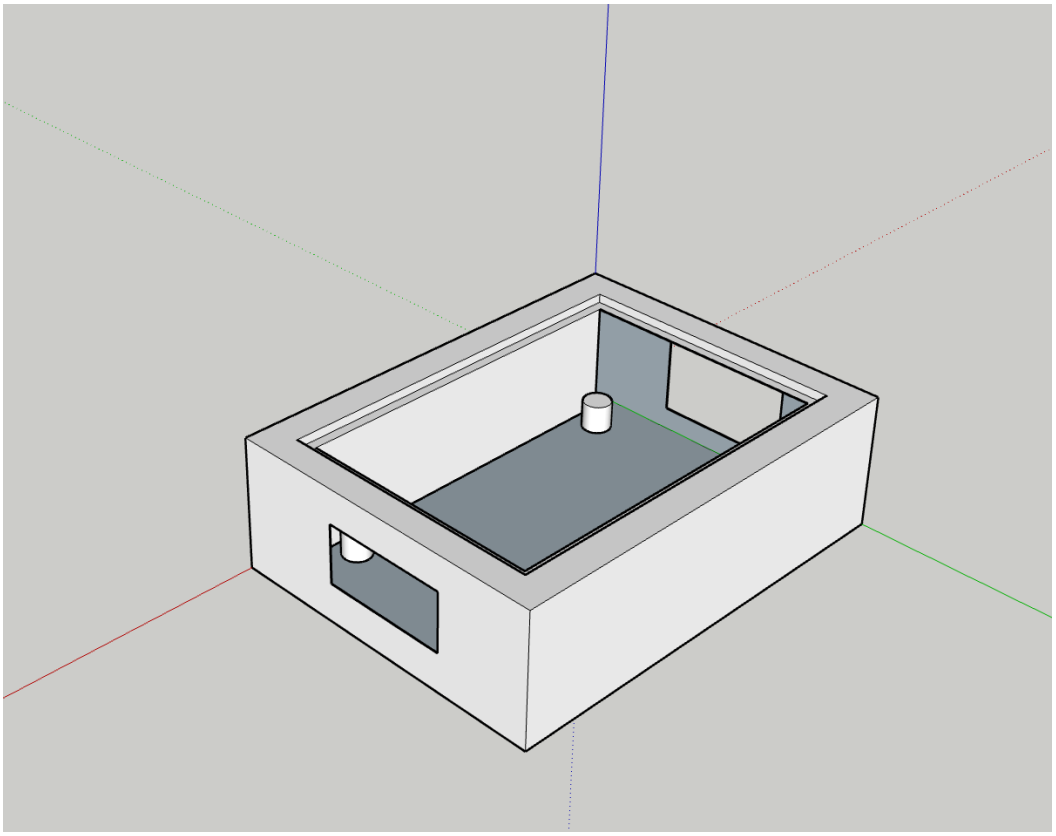

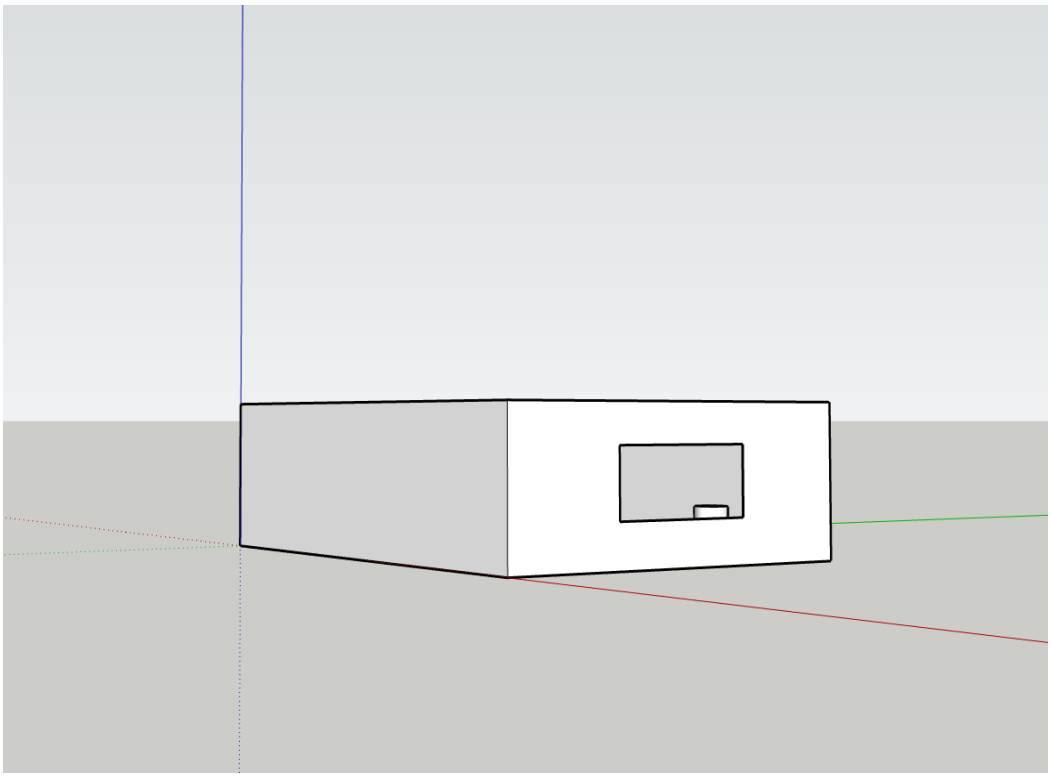

Part 2: 3D/2.5D Bracket

3D L-Bracket Dimensional Drawing

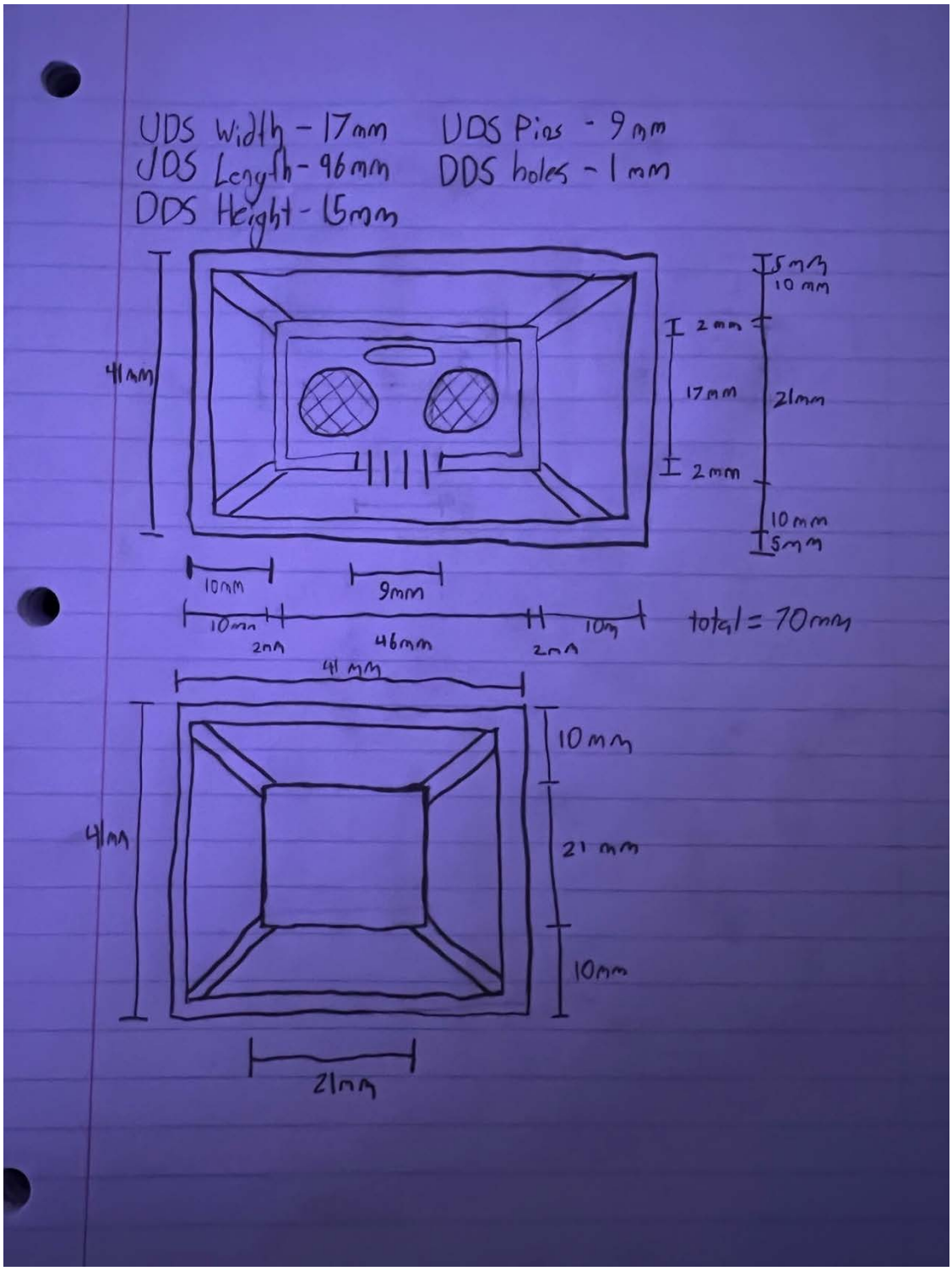

3D L-Bracket in OpenSCAD

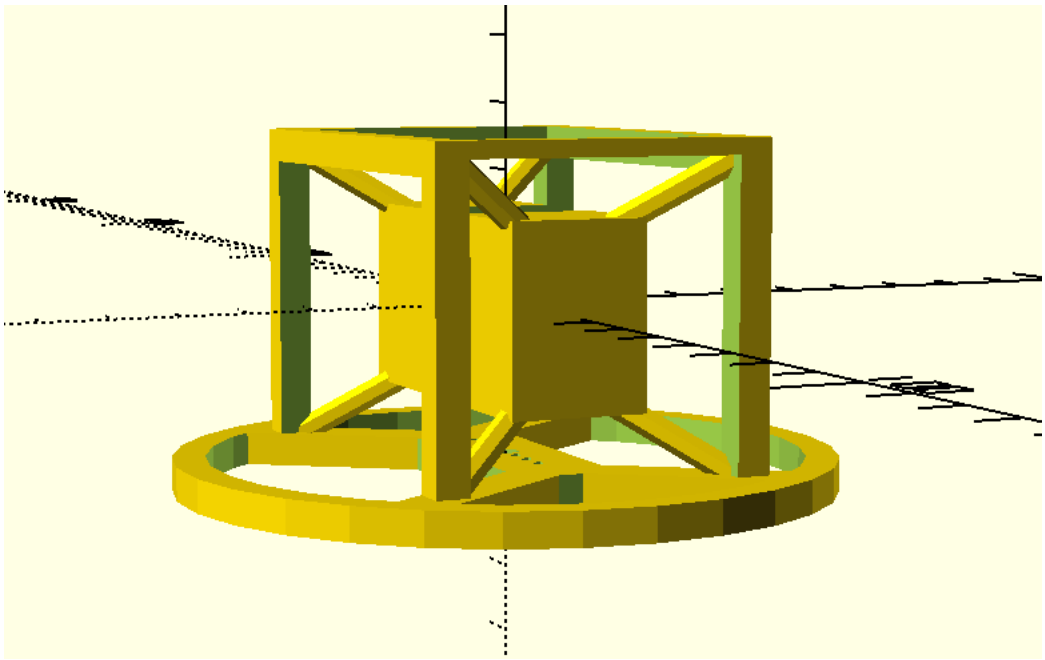

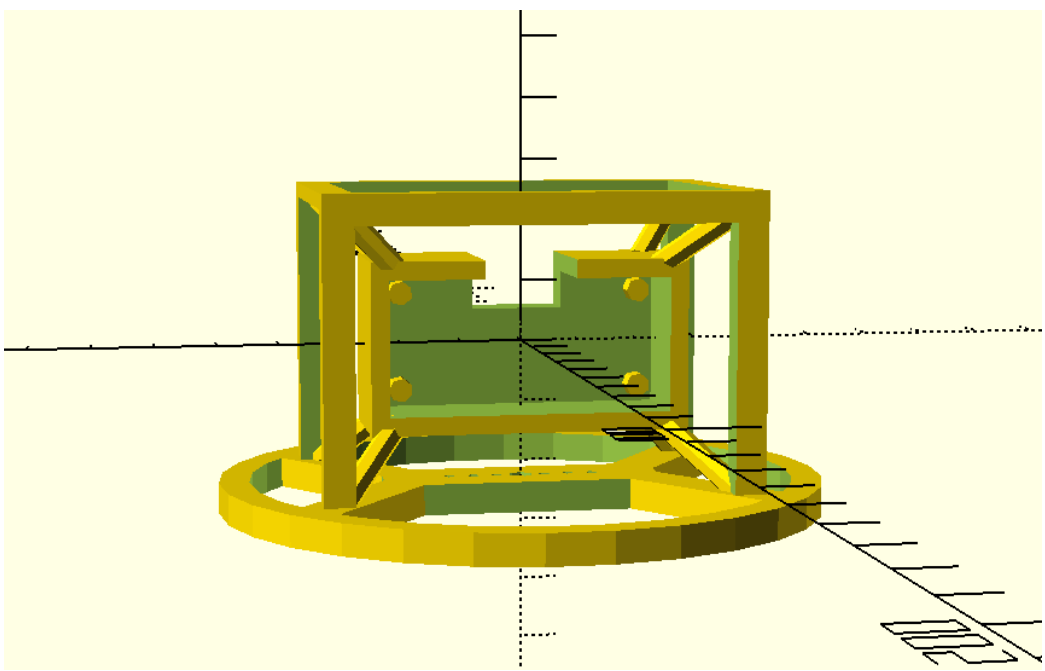

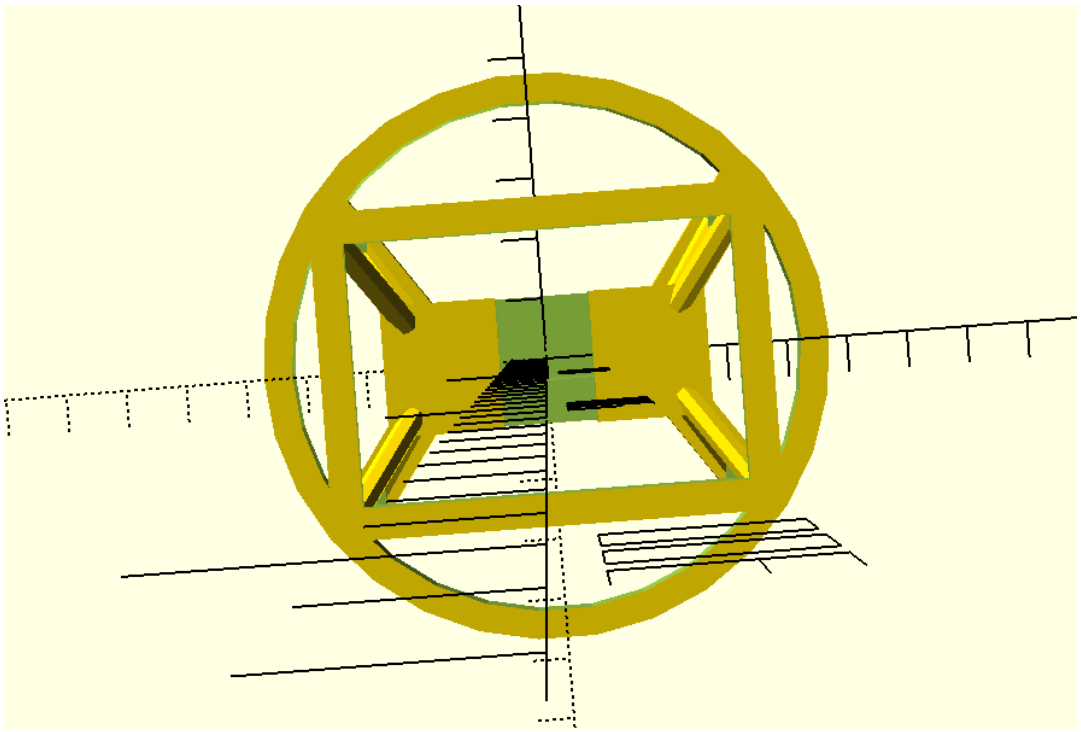

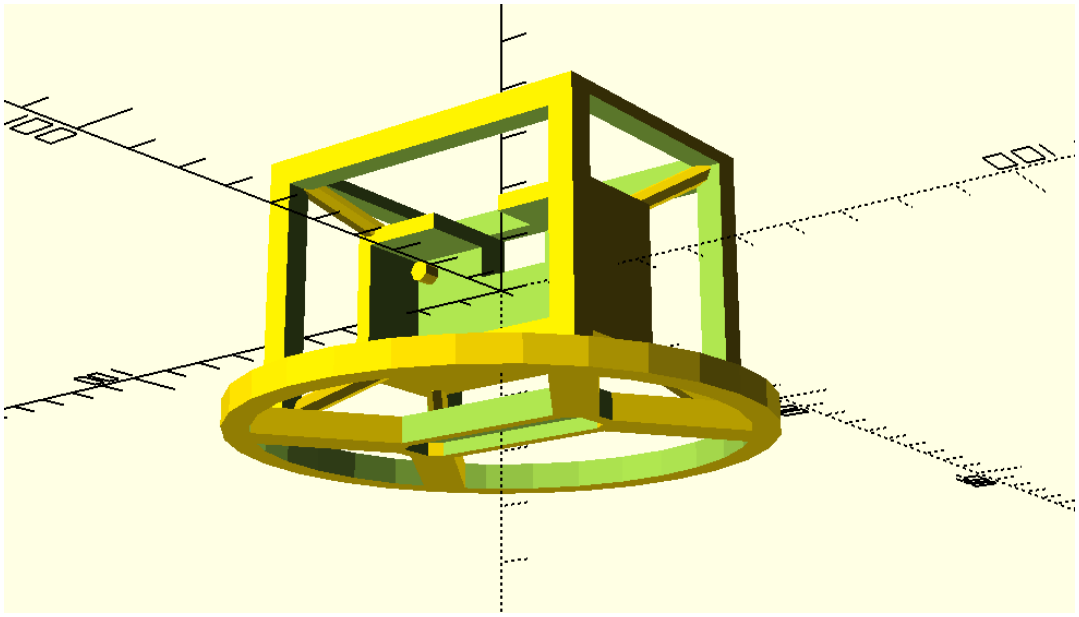

3D L-Bracket Construction

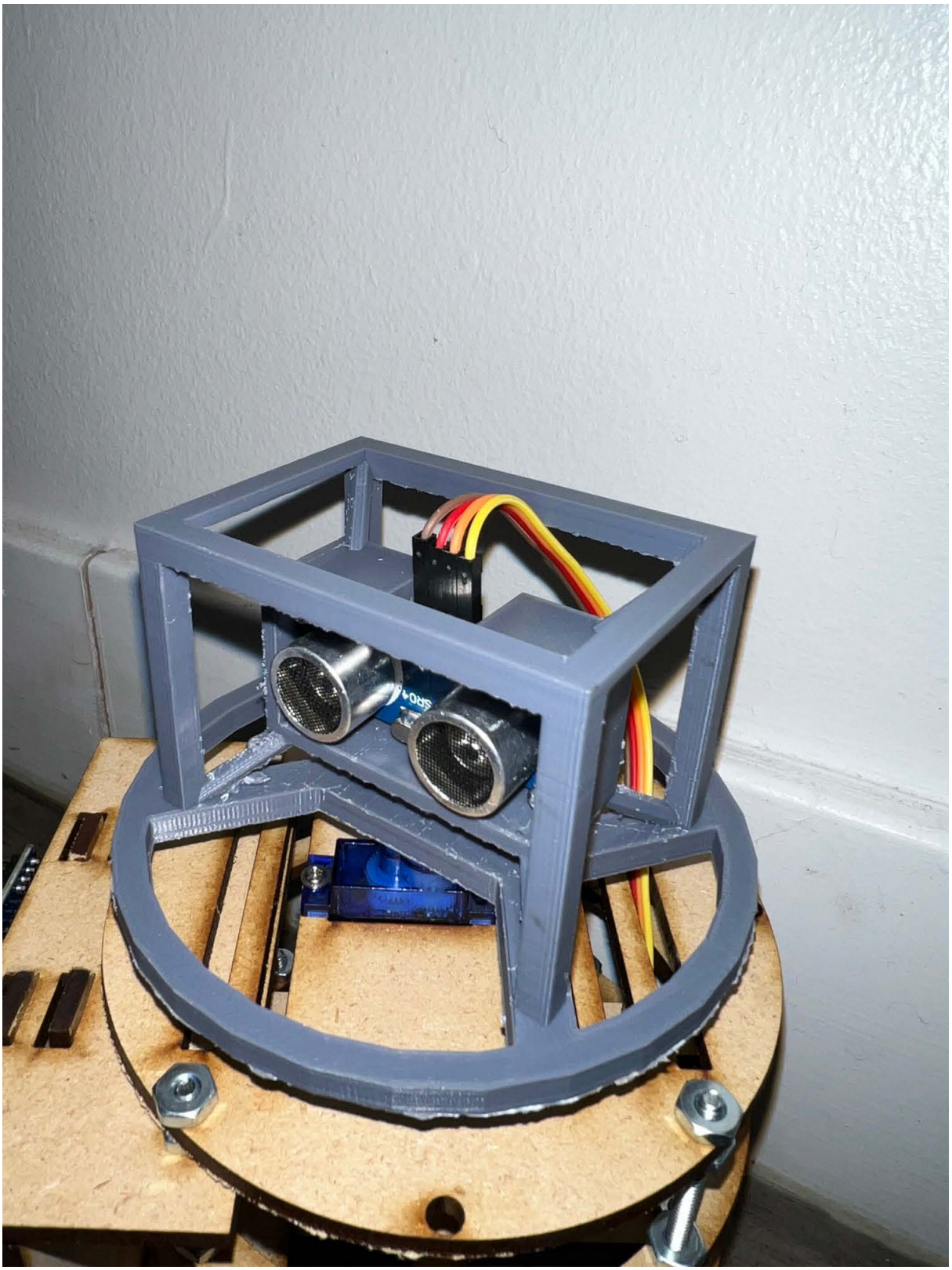

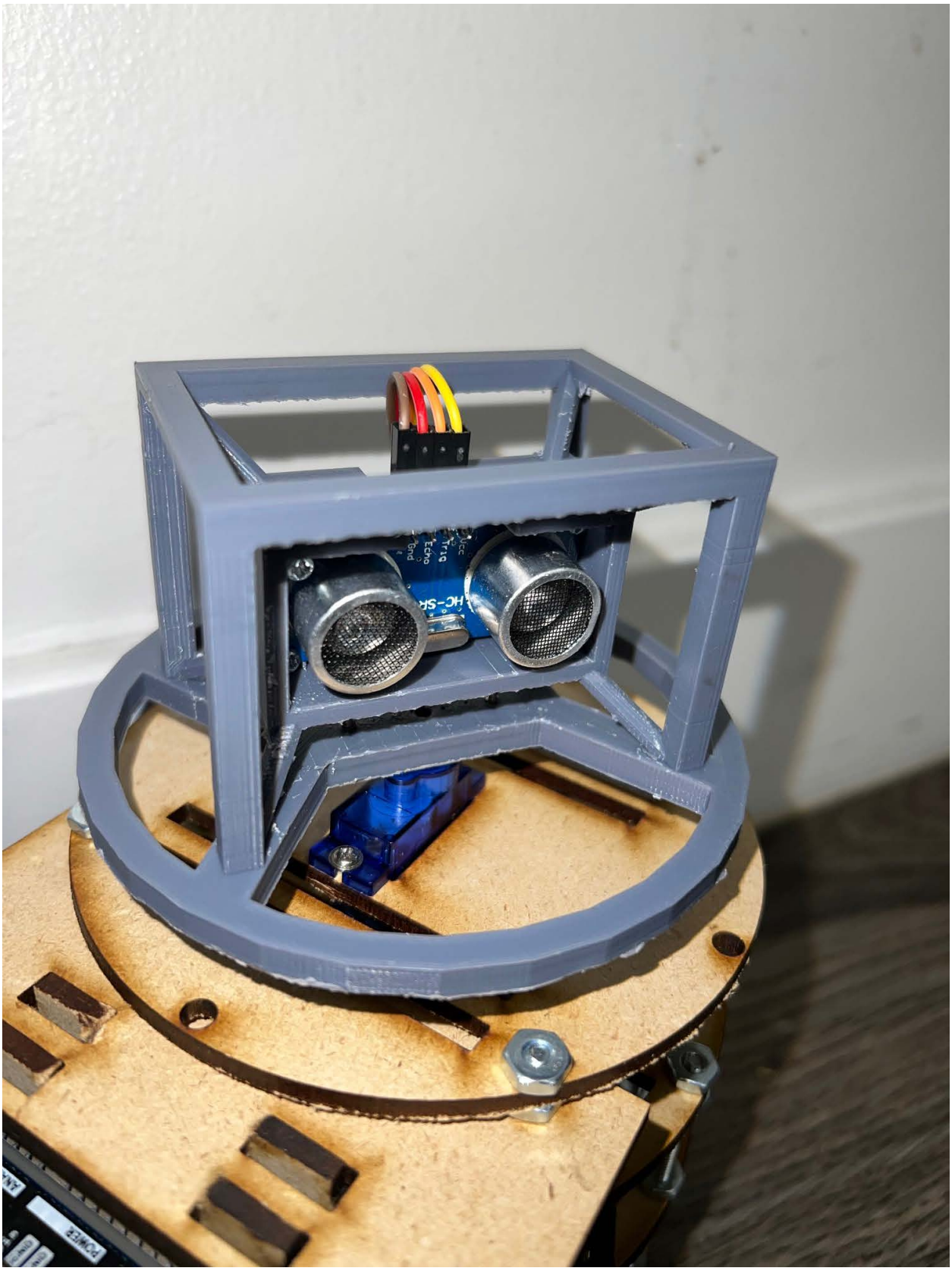
Vcc
Trig
Echo
Gnd
POWER

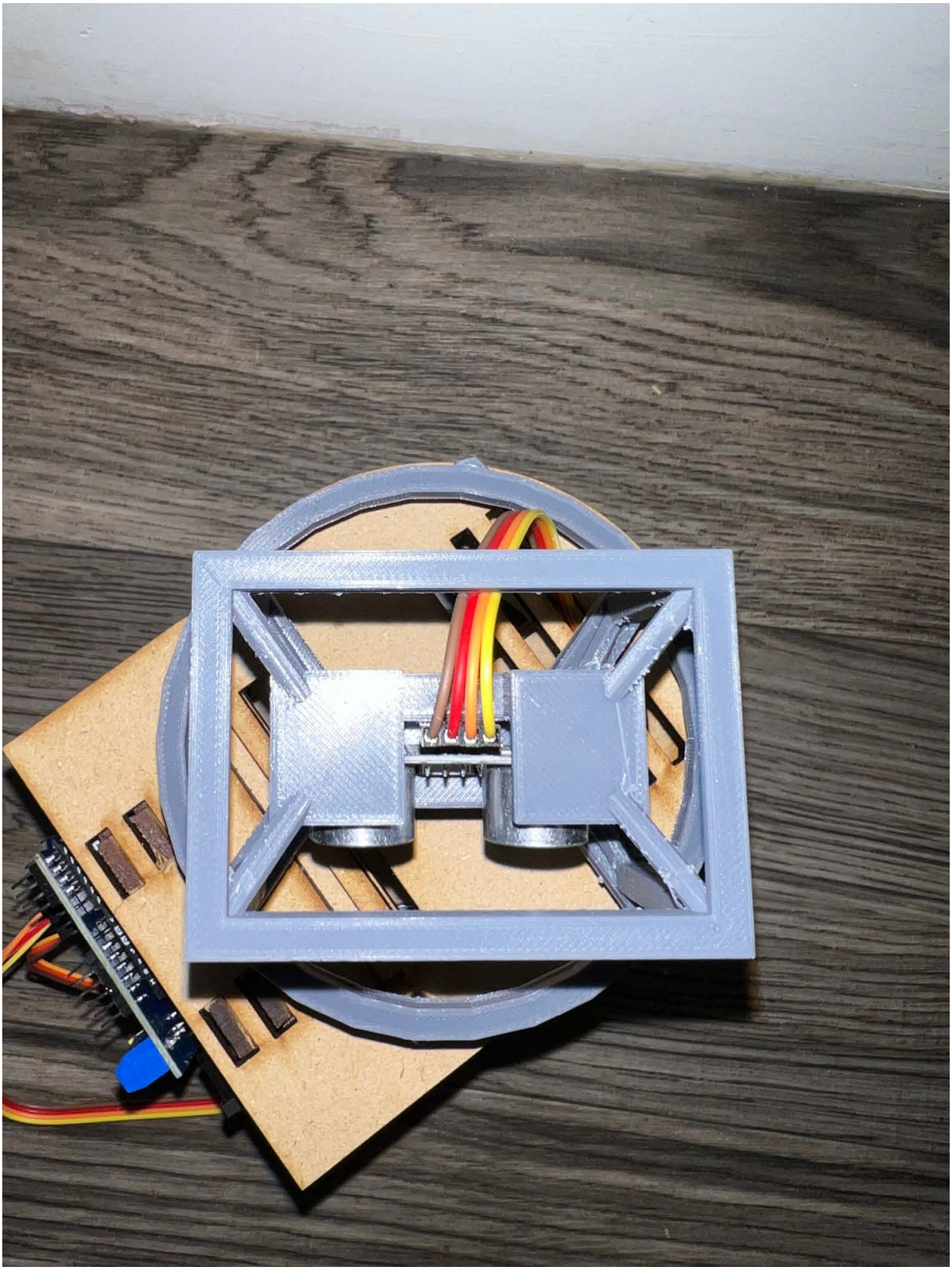

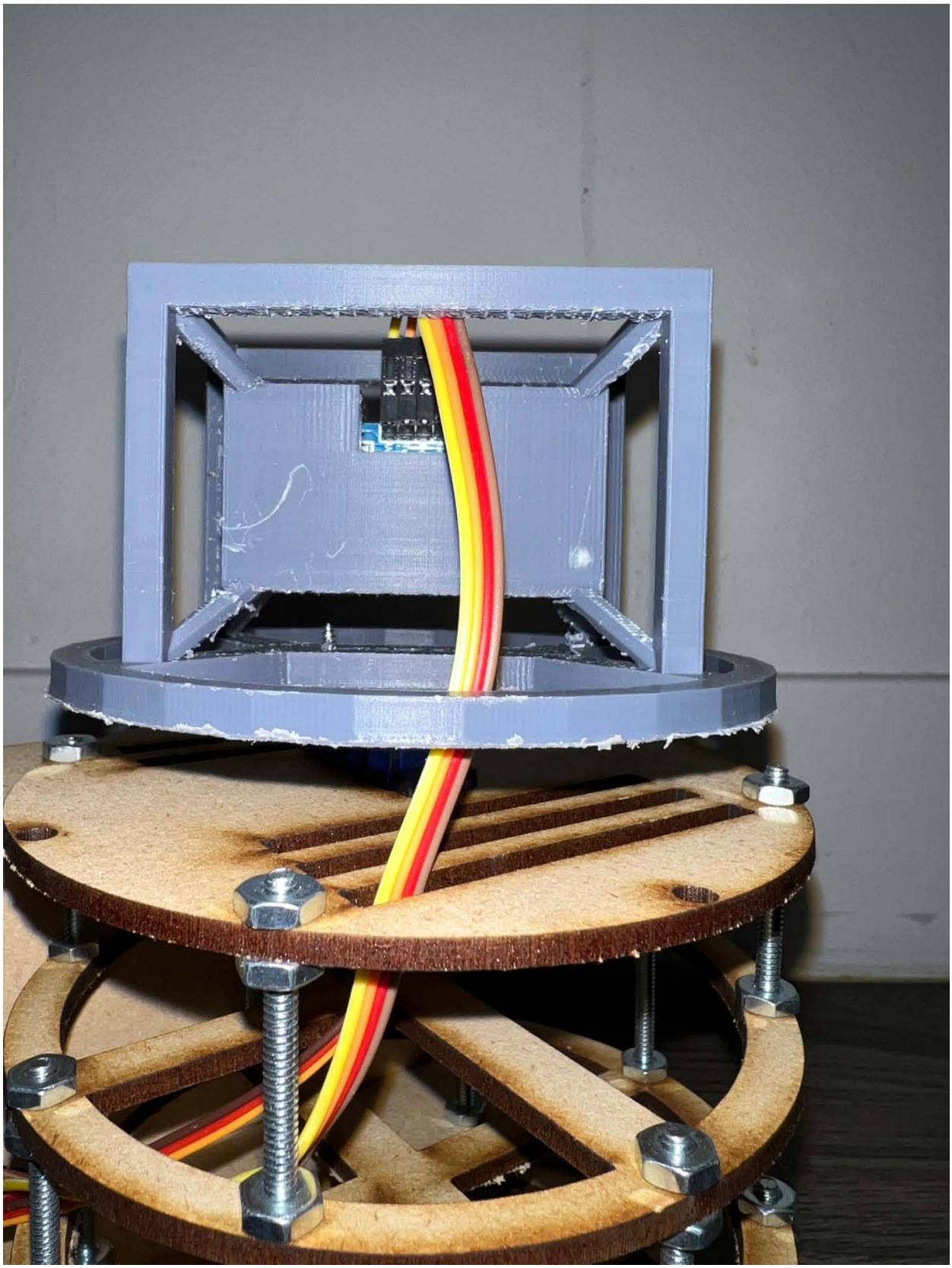

2.5D Bracket Dimensional Drawing

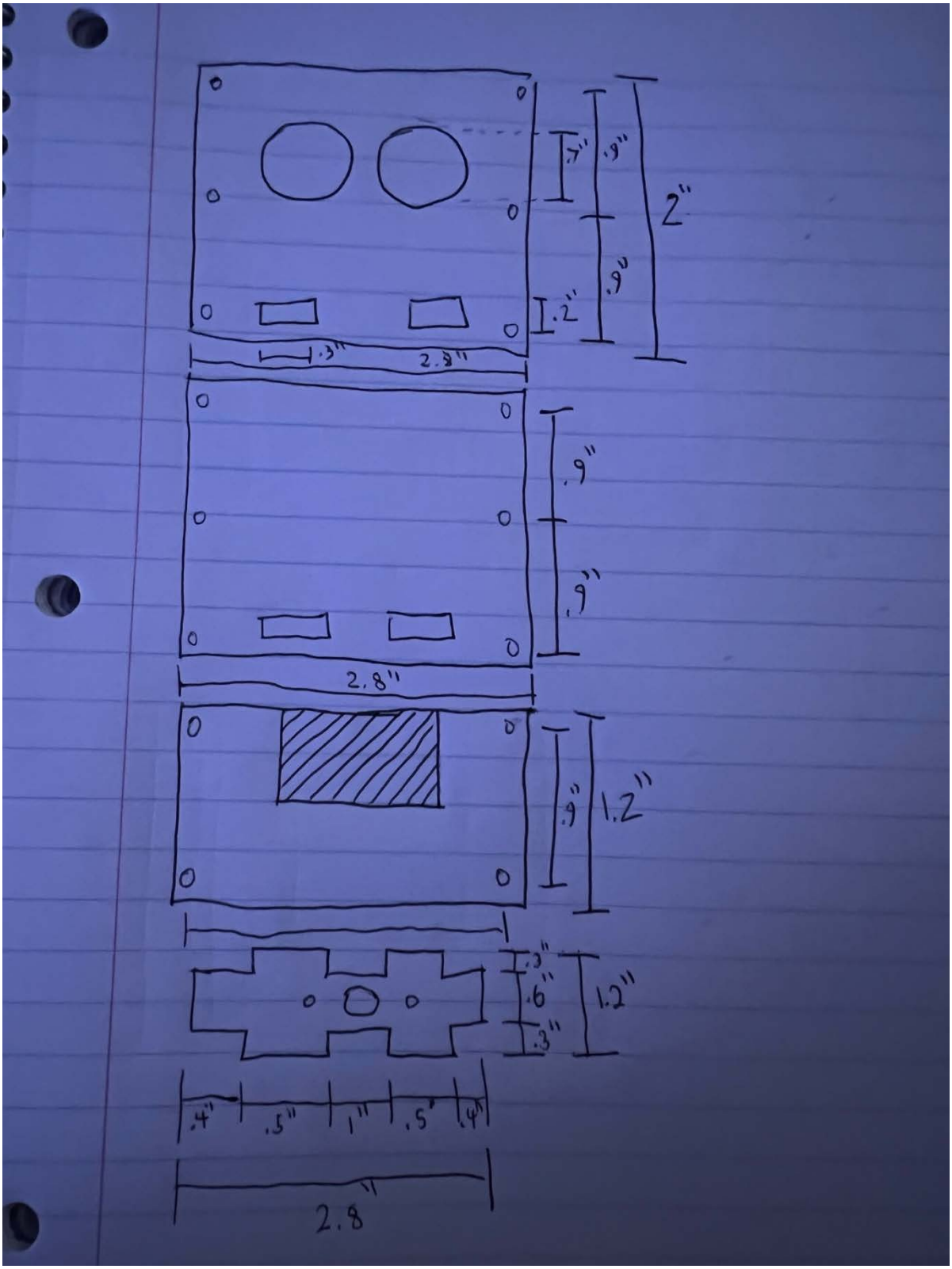

2.5D Bracket in Adobe Illustrator

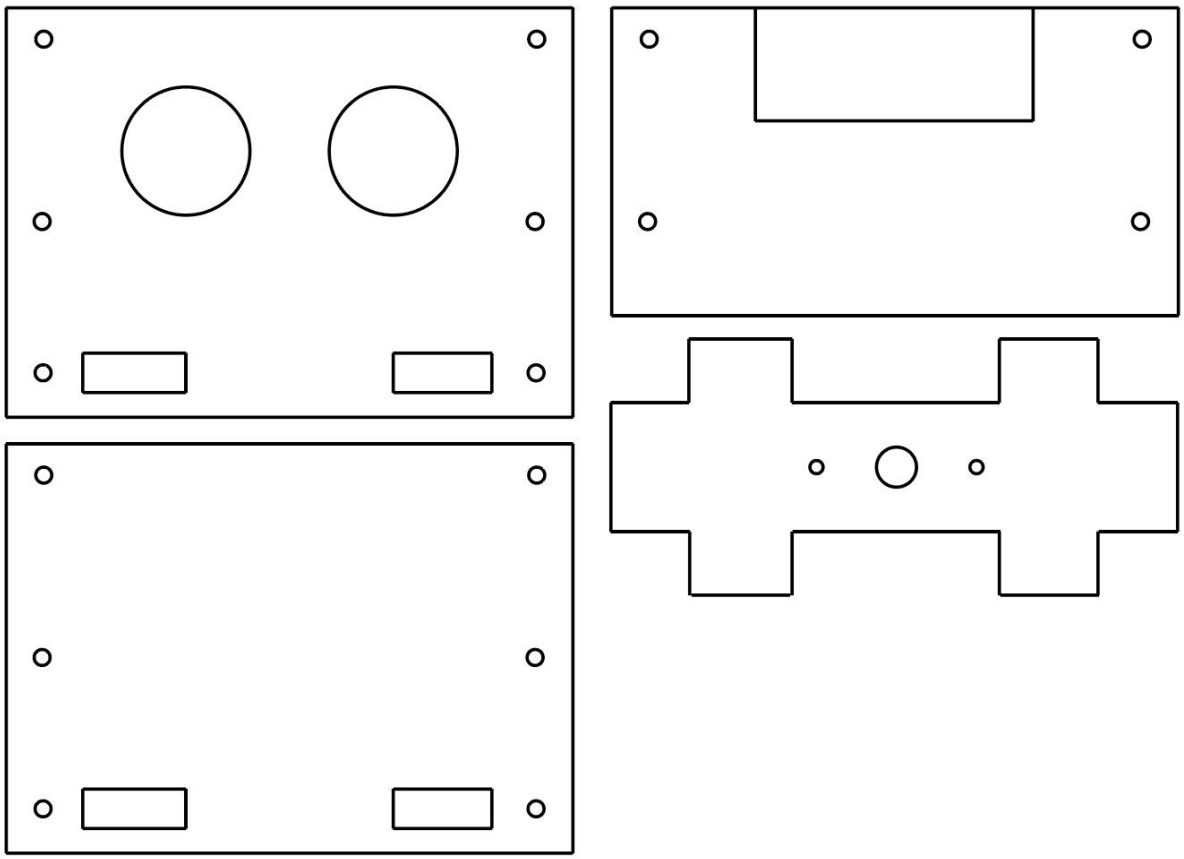

2.5D Bracket Construction

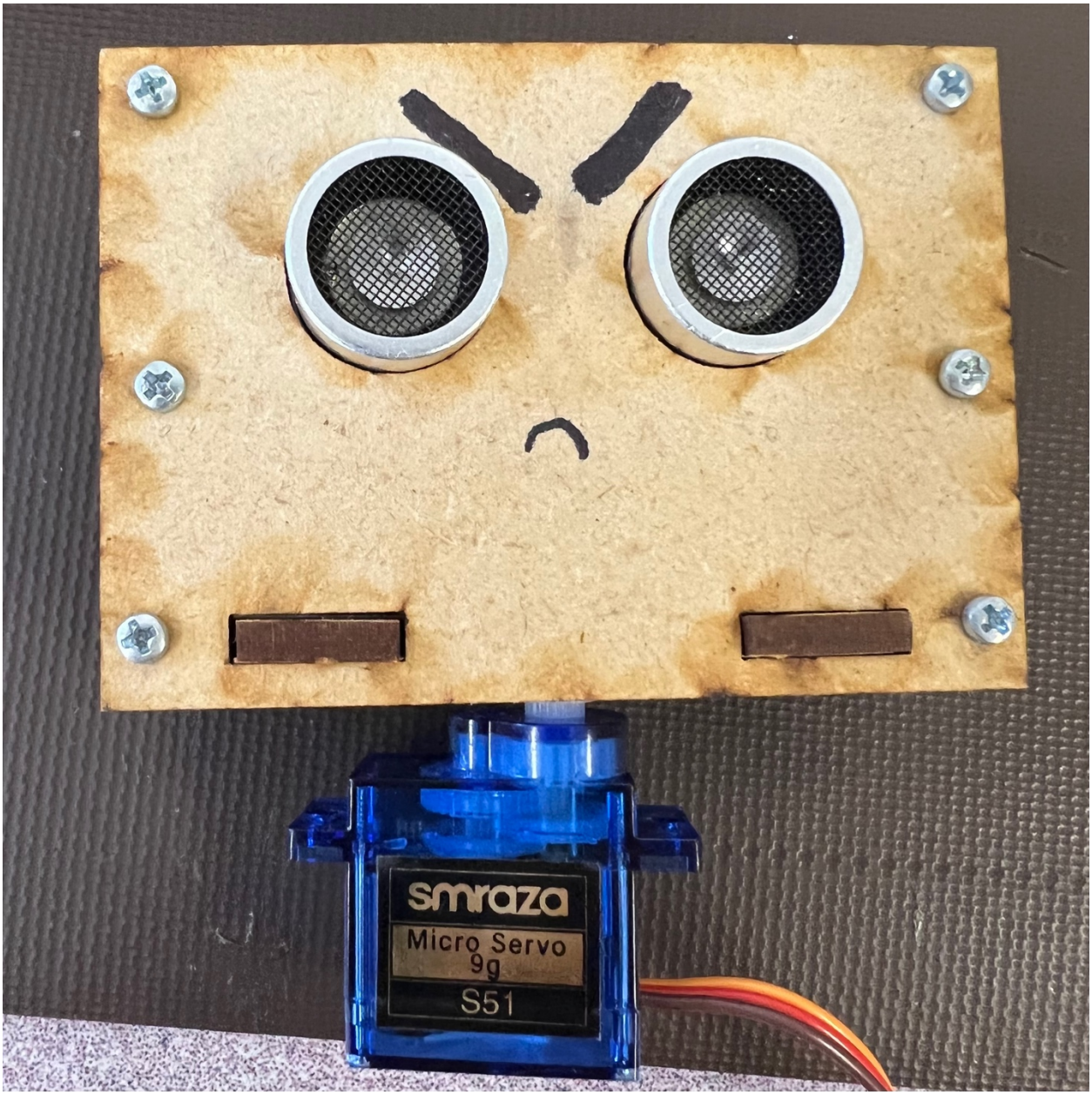

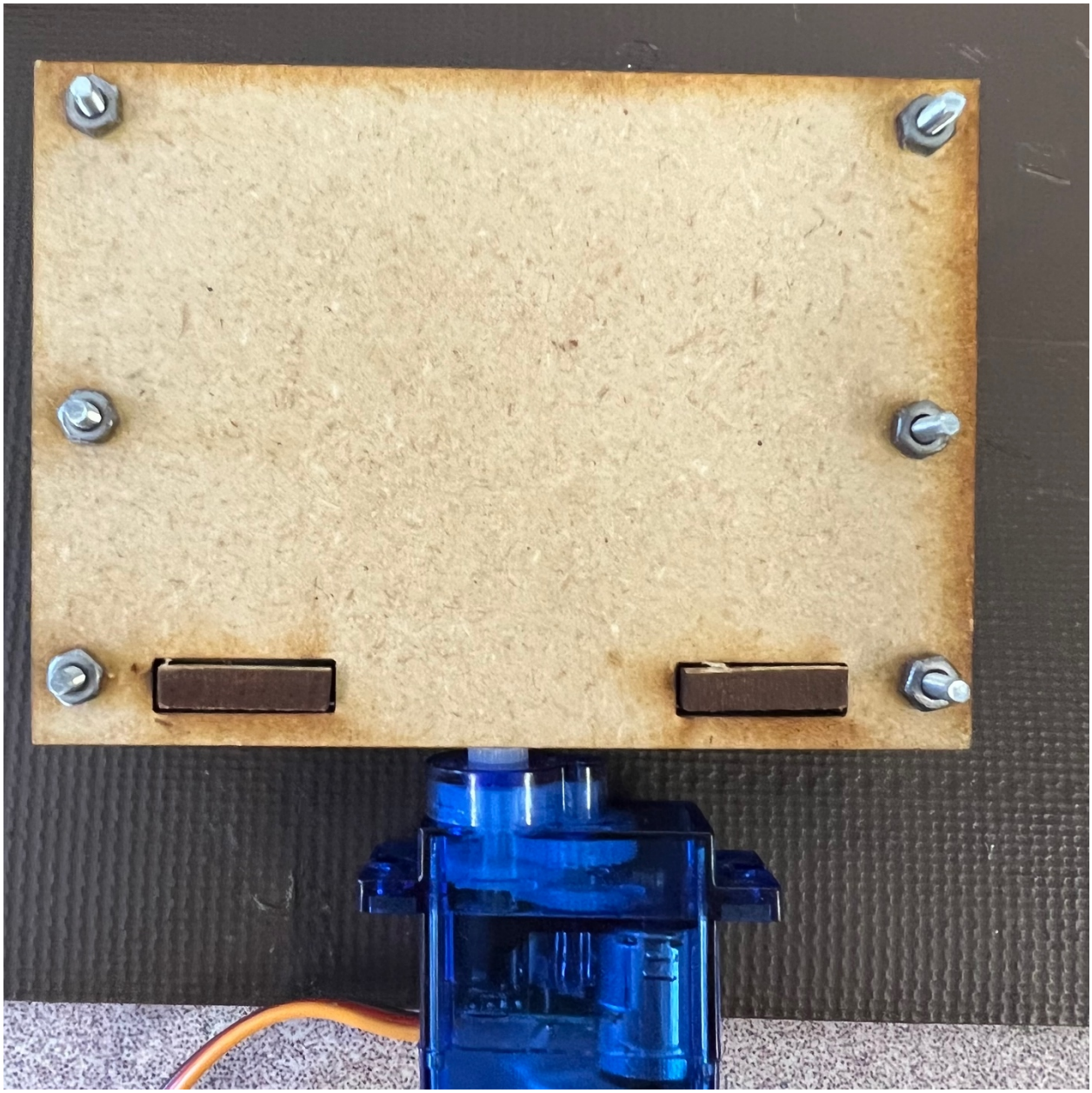

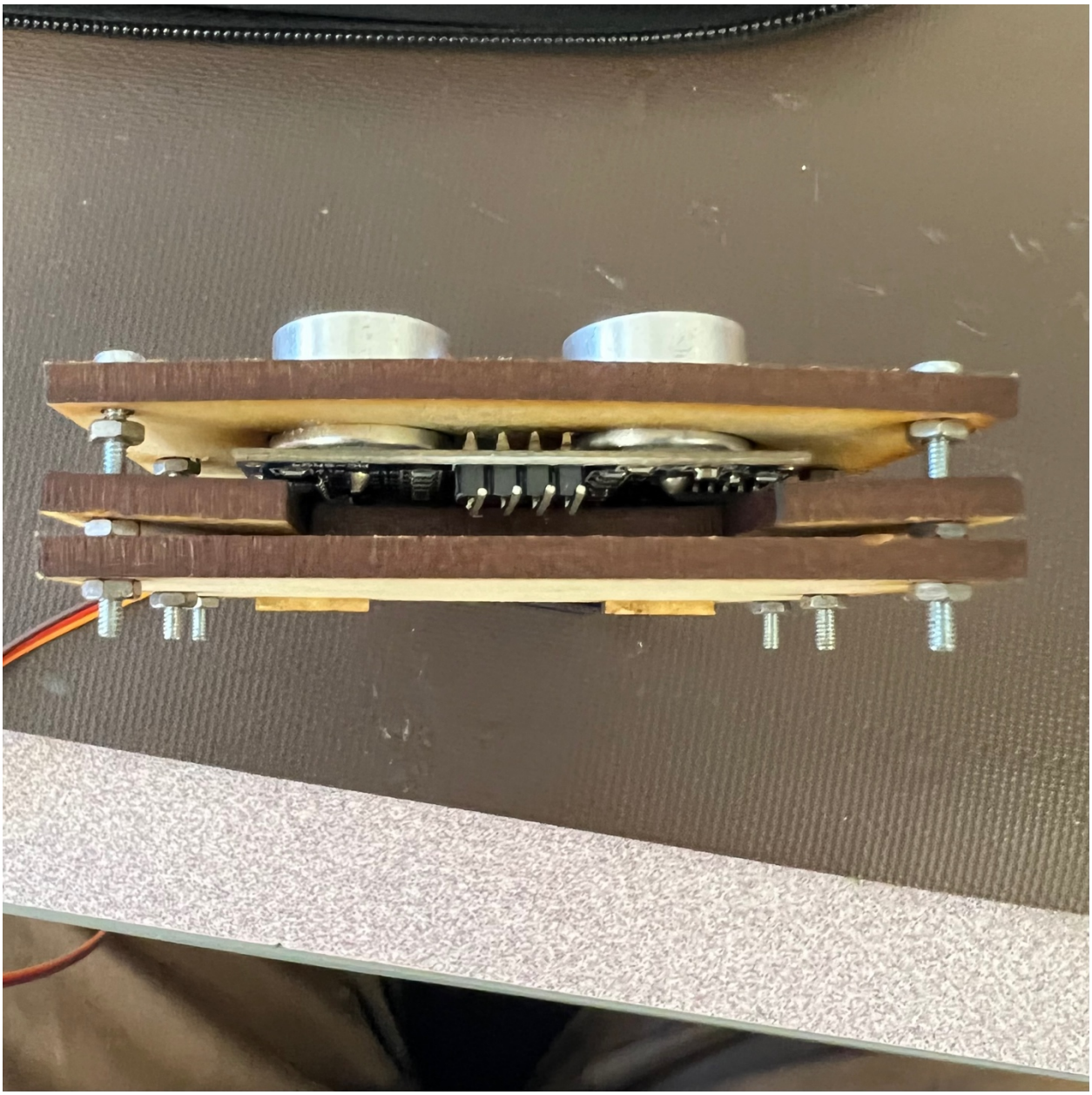

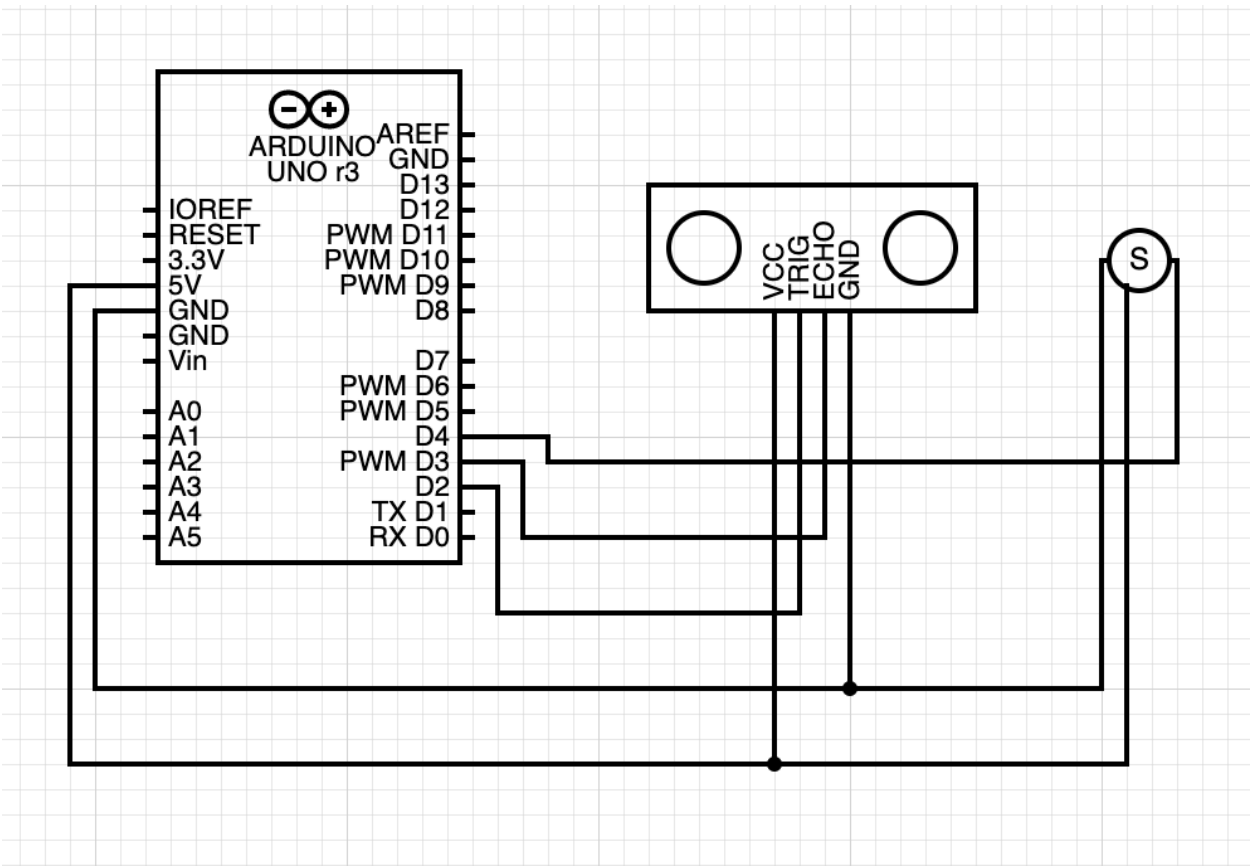
ARDUINO
UNO r3
AREF
GND
D13
D12
PWM D11
PWM D10
PWM D9
D8
D7
PWM D6
PWM D5
D4
PWM D3
D2
TX D1
RX D0
IOREF
RESET
3.3V
5V
GND
GND
Vin
A0
A1
A2
A3
A4
A5
VCC
TRIG
ECHO
GND
S

Important Calculations

Pulse width to Centimeters

$$cm = \frac{pulseWidth}{58}$$

Centimeters to Inches

$$inch = cm * 0.393701$$

Distance & Angle to X

$$X = dist * \cos(ang) + xOrigin$$

Distance & Angle to Y

$$Y = dist * \sin(ang) + yOrigin$$

Extensions

Interesting and complex 3D printed L-Bracket (as shown above)

Tower in Adobe Illustrator (Constructed using 4 of this component)

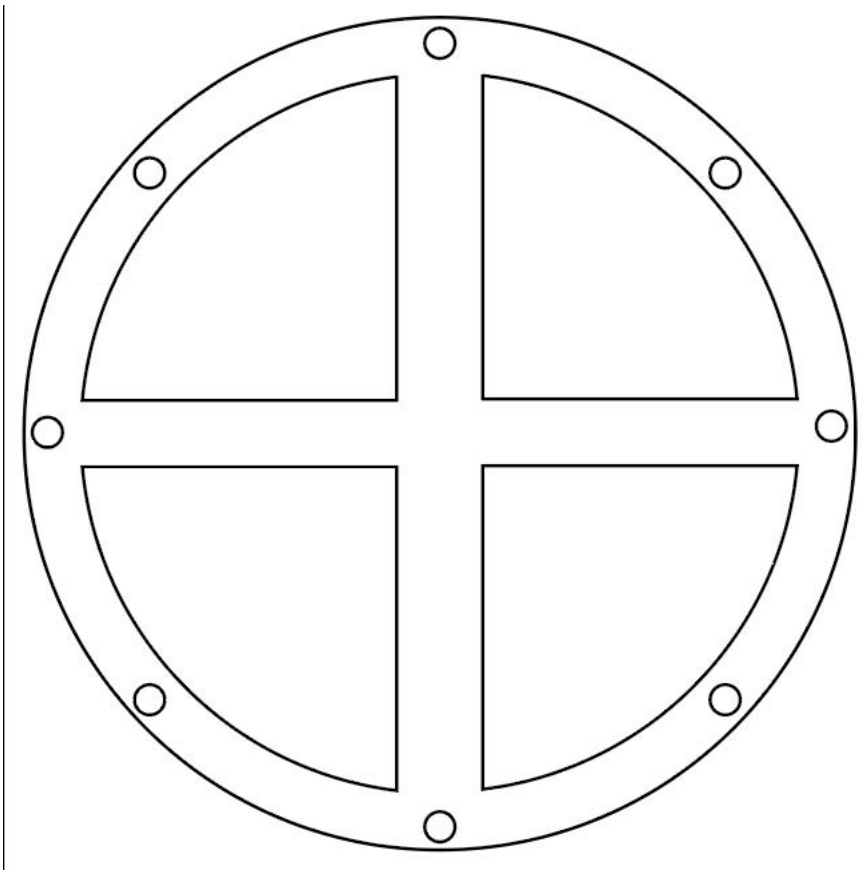

Tower Arduino & Servo Bracket in Adobe Illustrator

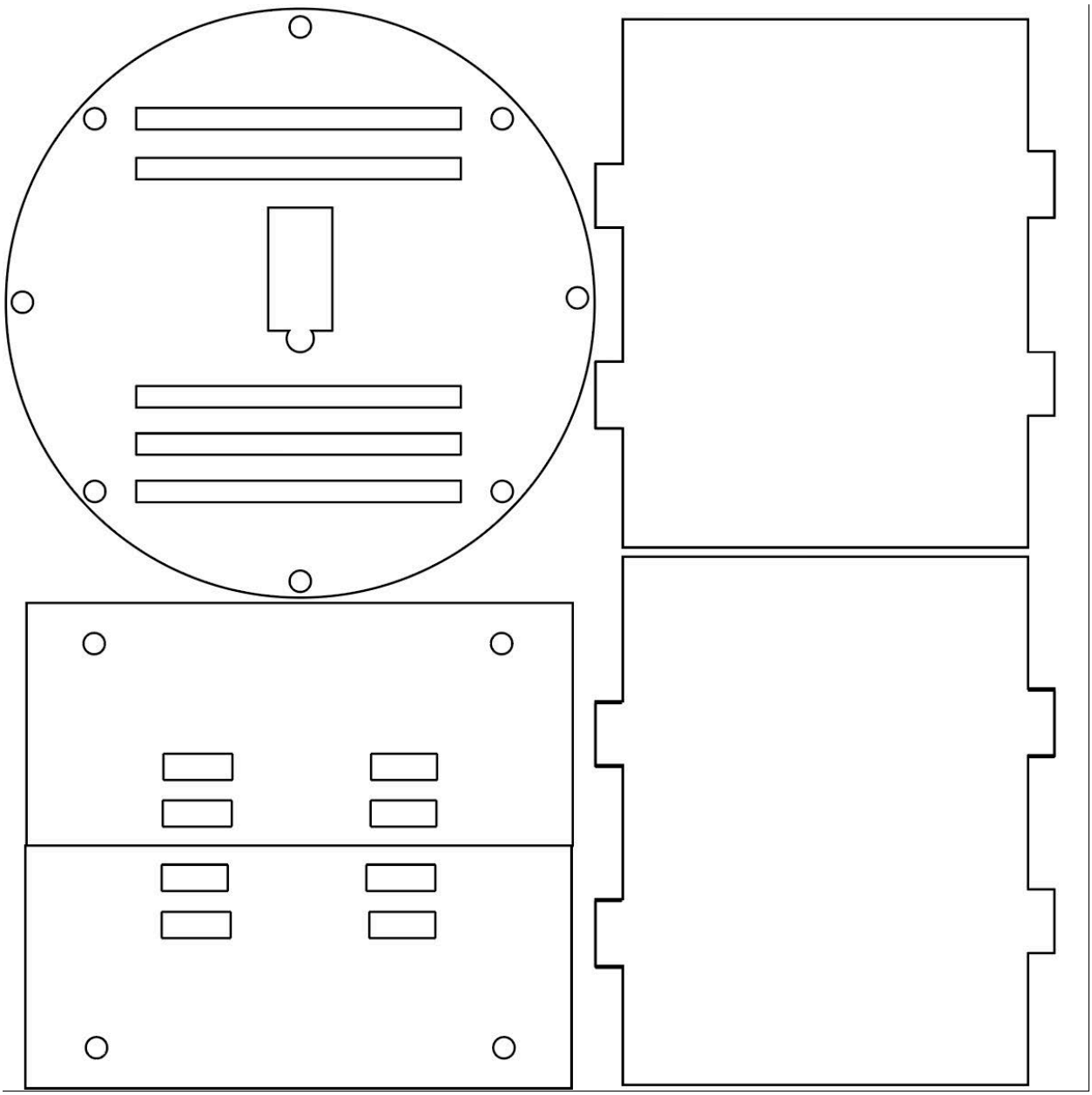

Tower and Brackets Construction

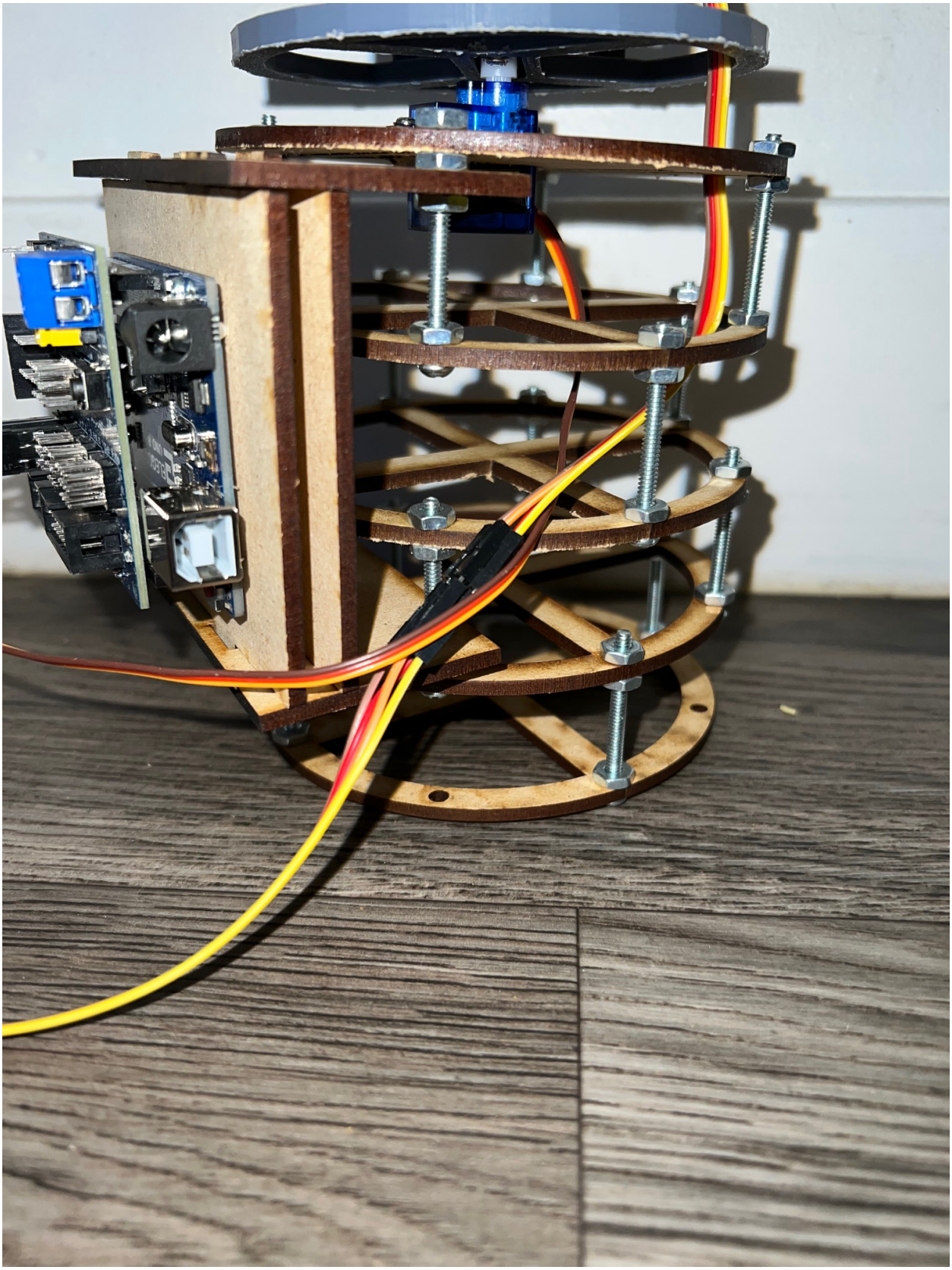

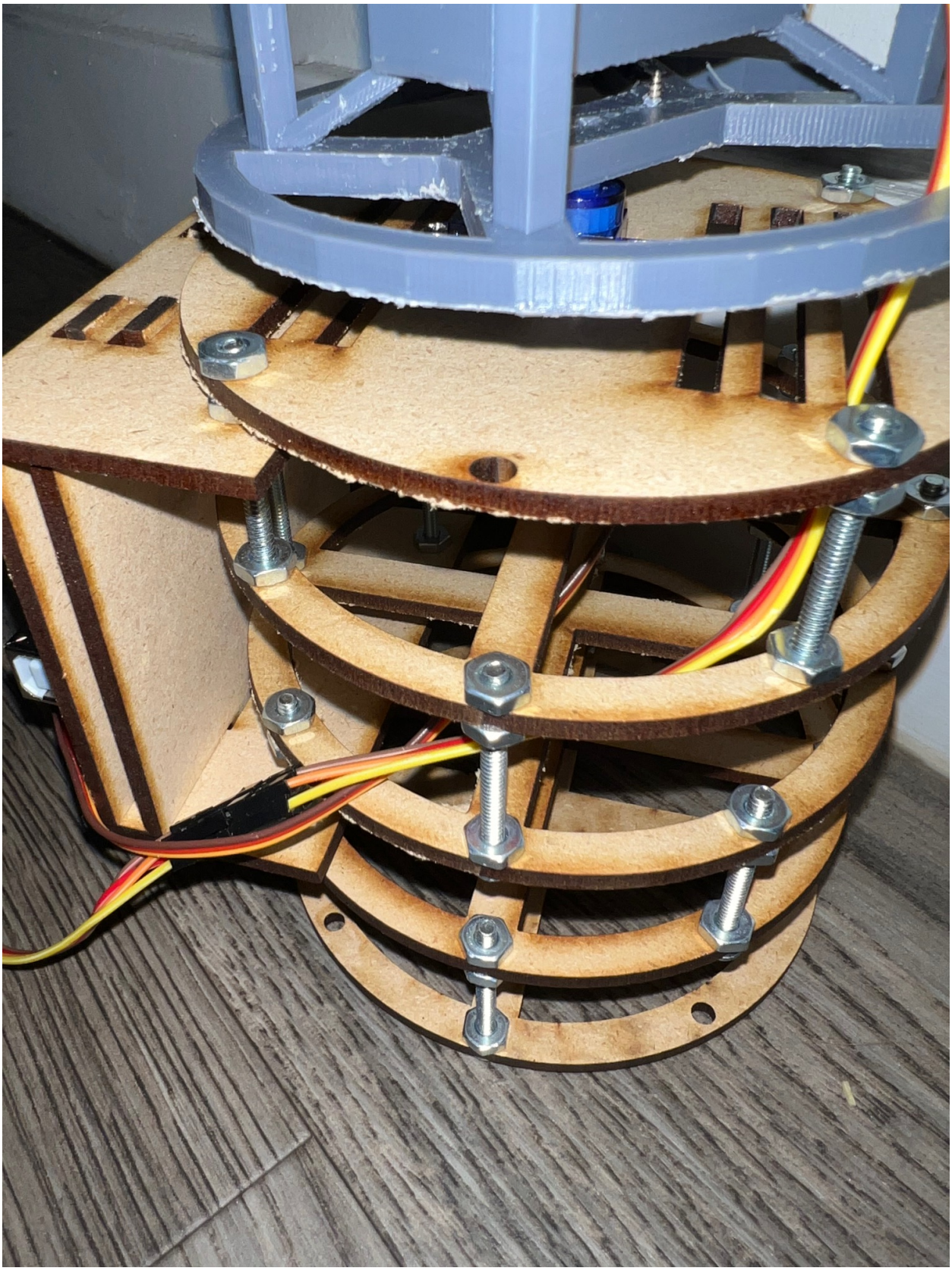

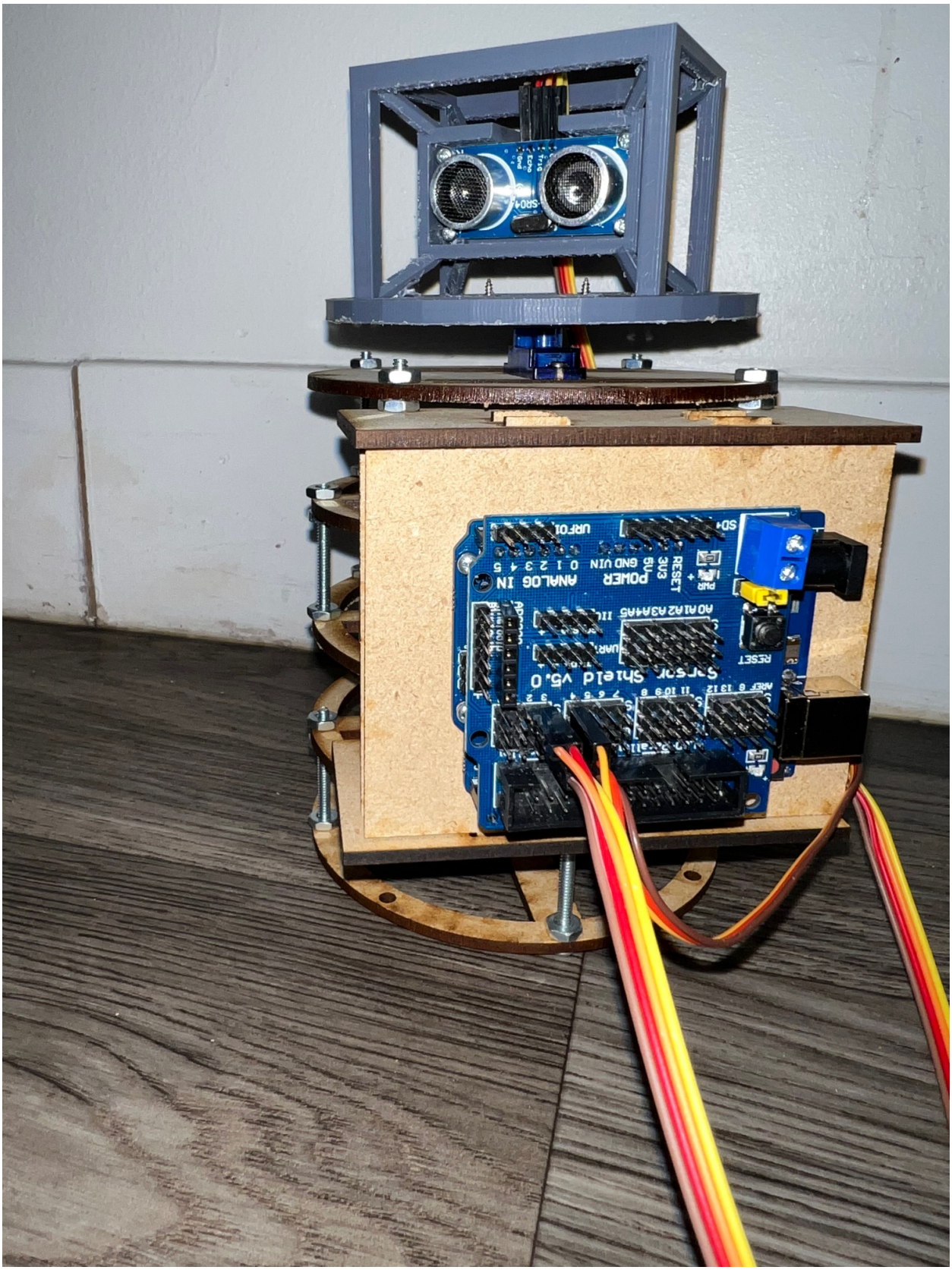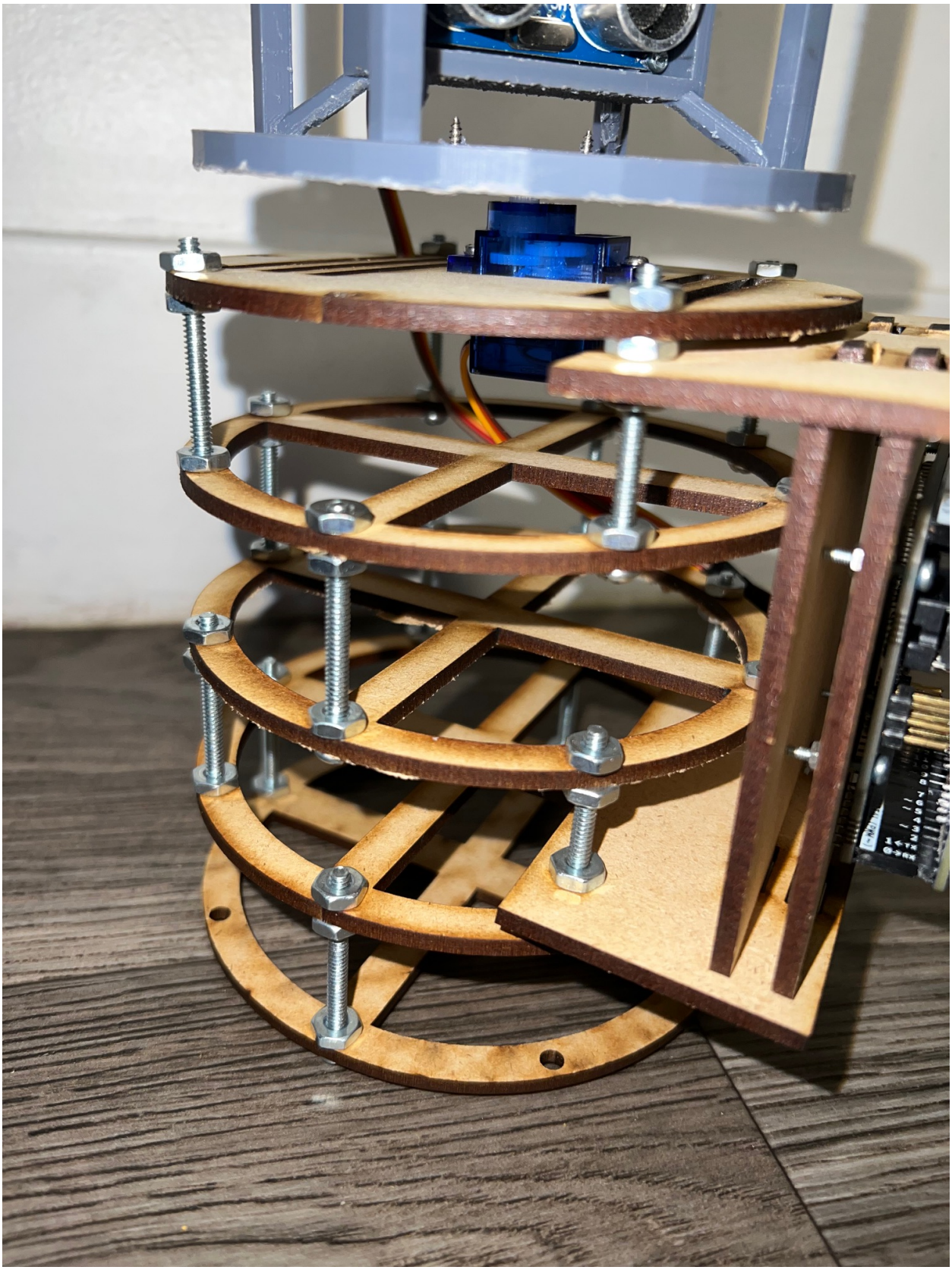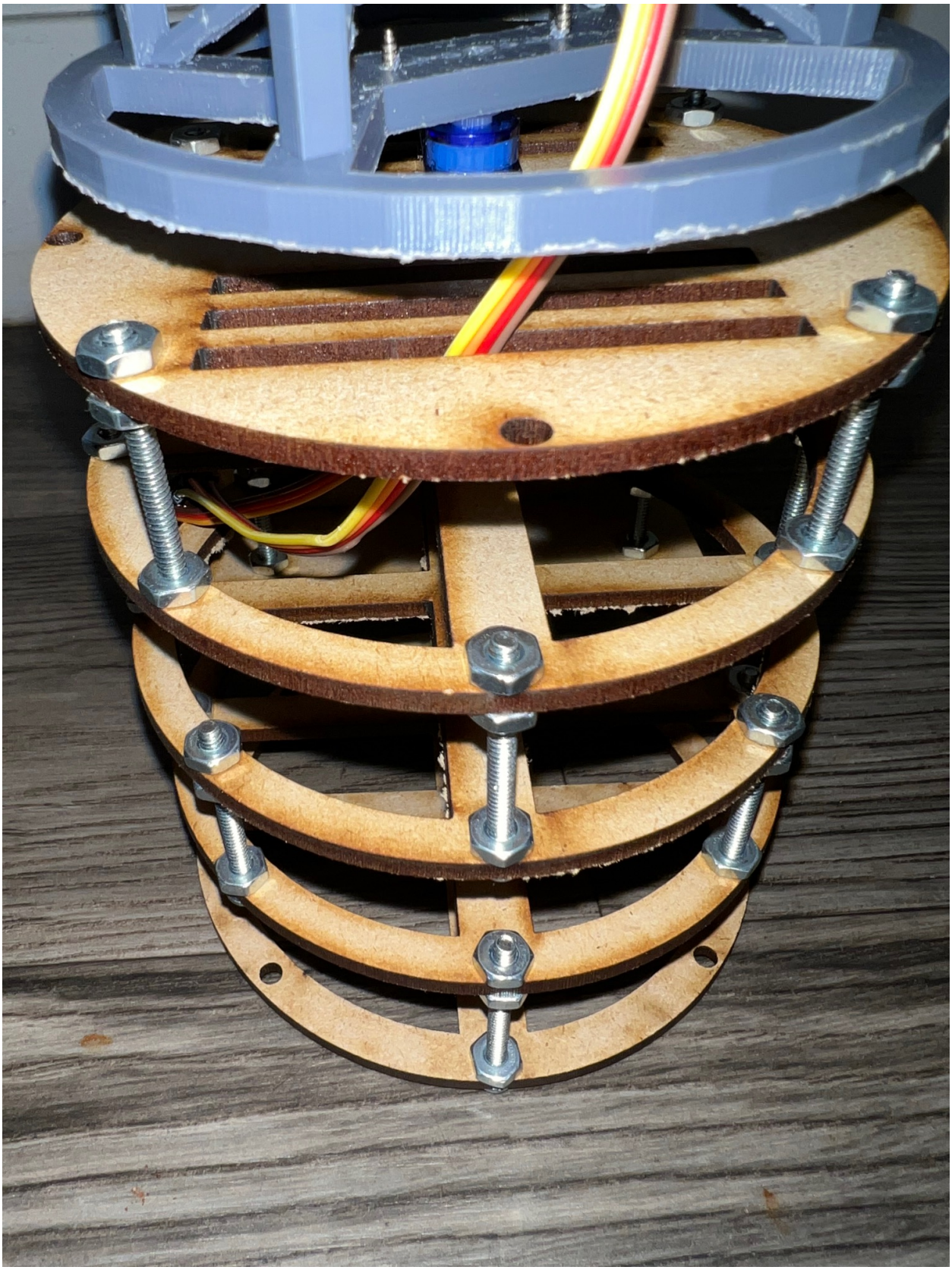
SR04
Sensor Shield v5.0
RESET
POWER
ANALOG IN
3V3
5V
GND VIN
0 1 2 3 4 5
A0 A1 A2 A3 A4 A5
UART0
SD4
PWR