Body	Vstup	Výstup	Kombinace
A	1, 3	2, 5	1 - 2, 1 - 5, 3 - 2, 3 - 5
B	2	3, 4	2 - 3, 2 - 4
C	4, 5, 7	6, 9	4 - 6, 4 - 9, 5 - 6, 5 - 9, 7 - 6, 7 - 9
D	6	7, 8	6 - 7, 6 - 8
E	9, 8	10	9 - 10, 8 - 10
F	10, 13	11, 12	10 - 11, 10 - 12, 13 - 11, 13 - 12
G	12	13	12 - 13

Situace (MDL = 2)

1 - 2 - 3 - 2 - 4 - 6 - 7 - 6 - 8 - 10 - 11

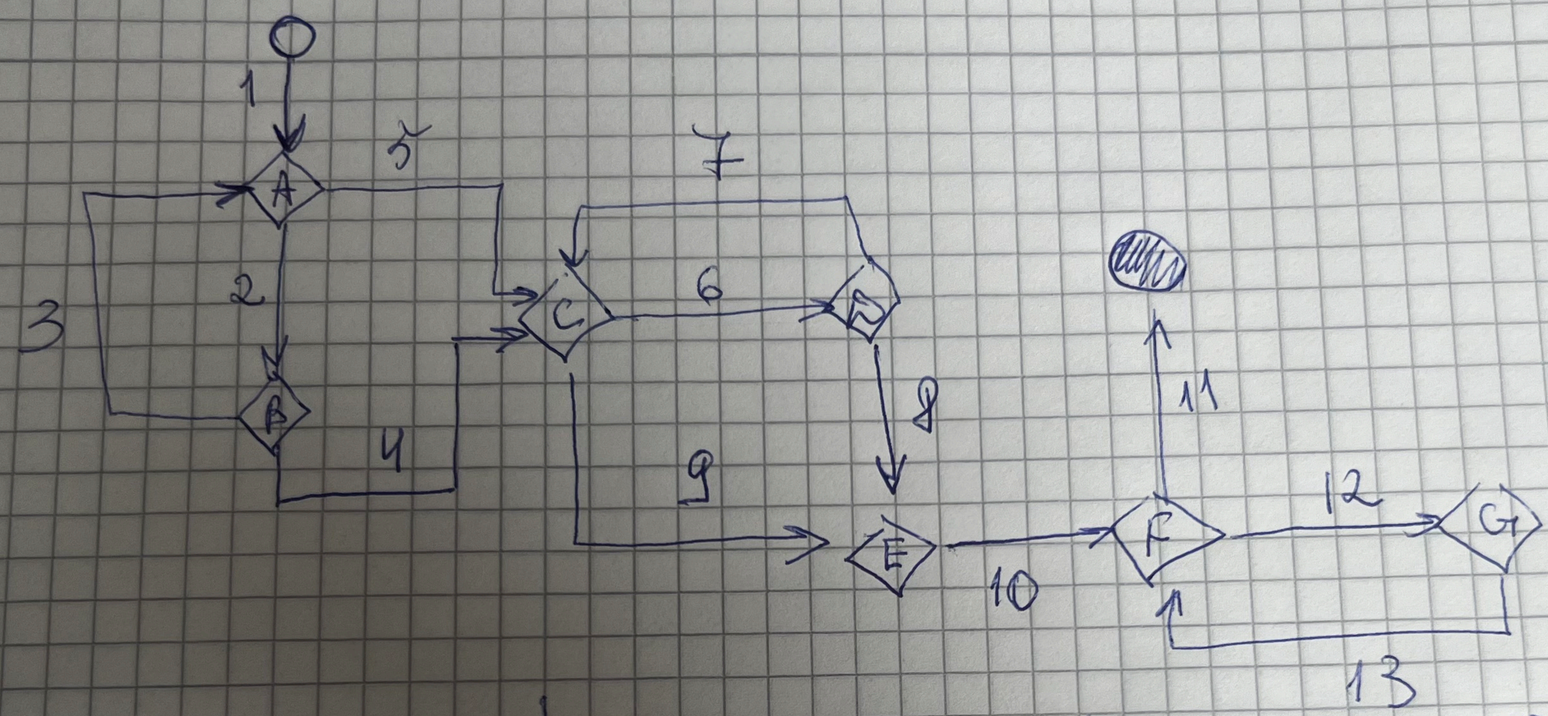

Body	vstup	výstup
A	1, 3	2, 5
B	2	3, 4
C	4, 5, 7	6, 9
D	6	7, 8
E	9, 8	10
F	10, 13	11, 12
G	12	13

Situations (TDL = 1)

1 – 2 – 3 – 5 – 6 – 7 – 9 – 10 – 11