rydlr

RYDLR CLOUD SERVICES LTD

Address: 1402 Office Suites, GTC Towers, Waiyaki Way,
P. O. Box 16491-00100, Nairobi.
www.rydlr.com

Rydlr | Moverse: High-Throughput MoCap AI Pipeline

Overview

Rydlr Cloud Services is developing a **markerless motion-capture (MoCap) and AI blending framework** to power large-scale entertainment, biomechanics, and simulation workloads. The platform integrates **ElasticSearch**, **Fivetran**, and **NVIDIA-accelerated infrastructure** to deliver real-time capture, blending, and rendering at enterprise scale.

1. Data & Performance

- **Ingestion Throughput:** > 200 GB/s sustained, validated through ElasticSearch + Fivetran data pipelines.
- **Data Sources:** Markerless MoCap sensors (Luxonis / Orbbec / ZED) and MoCap libraries (FBX, GLB, BVH, TRC, JSON pose data).
- **Objective:** Achieve sub-100 ms query latency for searchable, blended motion sequences across multi-tenant GPU clusters.

2. Core AI Research

Publication: *Controllable Single-Shot Animation Blending with Temporal Conditioning* (ArXiv 2025-08)

- Extends **GANimator** (TOG '22) with **SPADE-like conditioning** for temporal coherence.
- Enables multi-motion blending (γ / β modulation) in a single forward pass — no retraining, no large datasets.
- Demonstrates smooth, data-driven transitions validated on Mixamo & 100STYLE benchmarks.
- Architecture optimised for **Transformer-based sequence compression** (200 GB runs) and **real-time inference** on NVIDIA H100 / RTX 6000 Ada GPUs.

3. Rendering & Visualization

- **Realtime Rendering:** Unreal Engine 5 + NVIDIA Omniverse pipeline for visual feedback and simulation.
- **VR Deployment:** Prototype live on Kickstarter → https://moverse.ai/vrchat showcasing VRChat integration with markerless capture.
- **Output Formats:** .trc / .glb / .fbx for interoperability with Omniverse, Blender, and Unity.

Address: 1402 Office Suites, GTC Towers, Waiyaki Way,
P. O. Box 16491-00100, Nairobi.
www.rydlr.com

4. Infrastructure & GPU Stack

Component	Specification	Notes
GPU Nodes	NVIDIA DGX SPARK/ H100 / A100 80 GB SXM + PCIe	MIG virtualization enabled
Compute Density	Up to 40 kW per rack (≈ 10 kW net AI load)	Liquid + air hybrid cooling
Storage	35 → 200 PB scalable (> 400 GB/s I/O)	NVMe + object tiering
SLA	99.99 % uptime, 24 / 7 / 365 operations	Tier III+ facility
Frameworks	PyTorch 2 · CUDA 12 · TensorRT · Omniverse · Elastic · FiveTran · dbt · BigQuery	Optimised for Hopper (GPU) architecture

5. Collaboration Objectives

We seek to formalise engagement under NVIDIA's **Media & Entertainment Developer Relations** program to:

1. Validate motion-blending workloads under **Blackwell / Grace Hopper** reference architectures.

2. Integrate **Moverse AI** into **Omniverse Audio2Face / Machinima** workflows.

3. Co-develop benchmarks for **sustainable AI rendering** and **telemetry-based performance metrics** (aligned with upcoming MotoGP / AVL H_2 datasets).

4. Extend these capabilities into **Rydlr's tokenised digital-twin infrastructure** under the MindTribe Group's **US $ 8.3 B** smart city investment mandate.

Contact:
Ted Iro Opiyo | Chief Executive Officer, Rydlr Cloud Services Ltd
📞 +254 729 306 047 ✉️ ted@rydlr.com 🌐 www.rydlr.com

6. Interconnect Topology

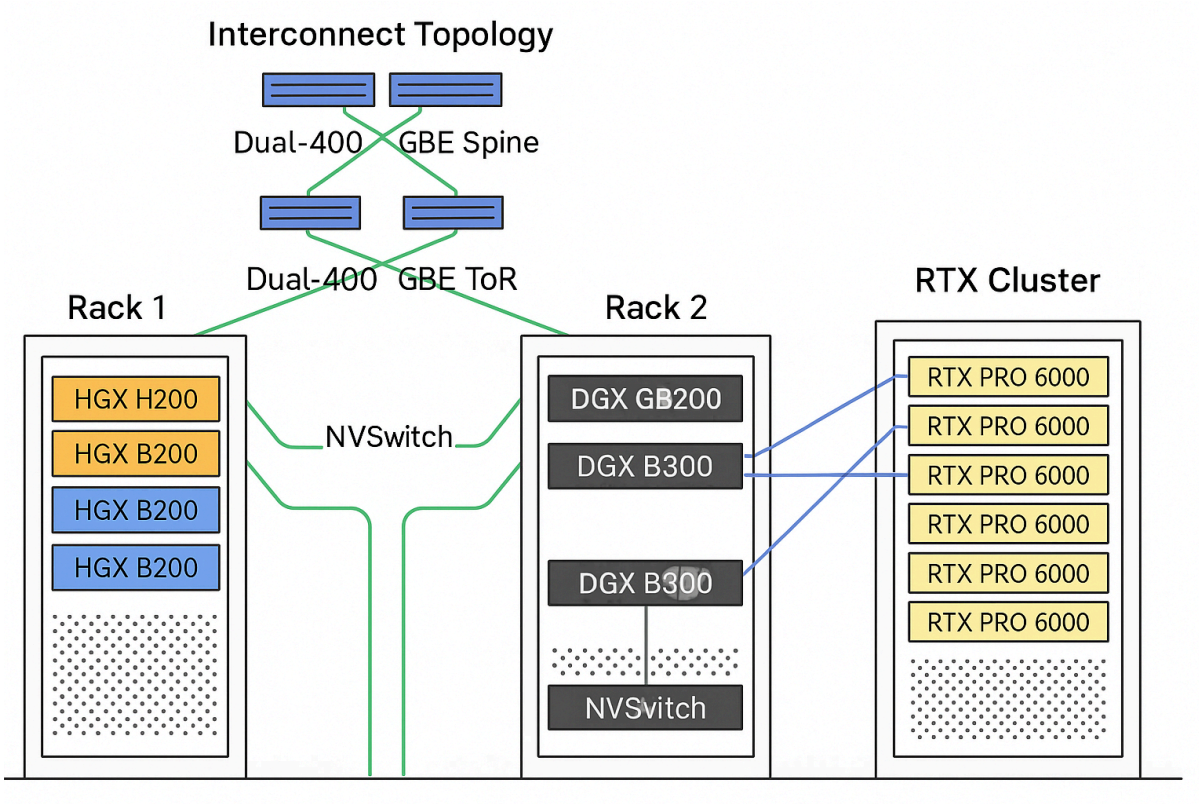

This diagram shows the **rack-level and network topology** of Rydlr Cloud Services' high-performance AI infrastructure at the iXAfrica NBOX1 campus.

- **Rack 1** hosts HGX H200 and B200 nodes linked via **NVSwitch** for intra-rack GPU communication.
- **Rack 2** contains DGX GB200 and B300 systems, interconnected both locally and to the RTX cluster using 400 GbE lines.
- The **RTX Cluster** holds RTX PRO 6000 GPU servers for visualization and motion preview workloads.
- **Dual 400 GbE ToR and Spine switches** form a redundant leaf-spine network fabric enabling NVLink/NVSwitch interconnects and NVMe-over-Fabric storage connectivity across racks.

Together, this setup supports multi-GPU training, inference, and rendering under a 40 kW per-rack liquid-cooled design.

Address: 1402 Office Suites, GTC Towers, Waiyaki Way,
P. O. Box 16491-00100, Nairobi.
www.rydlr.com

7. Moverse Architecture Overview

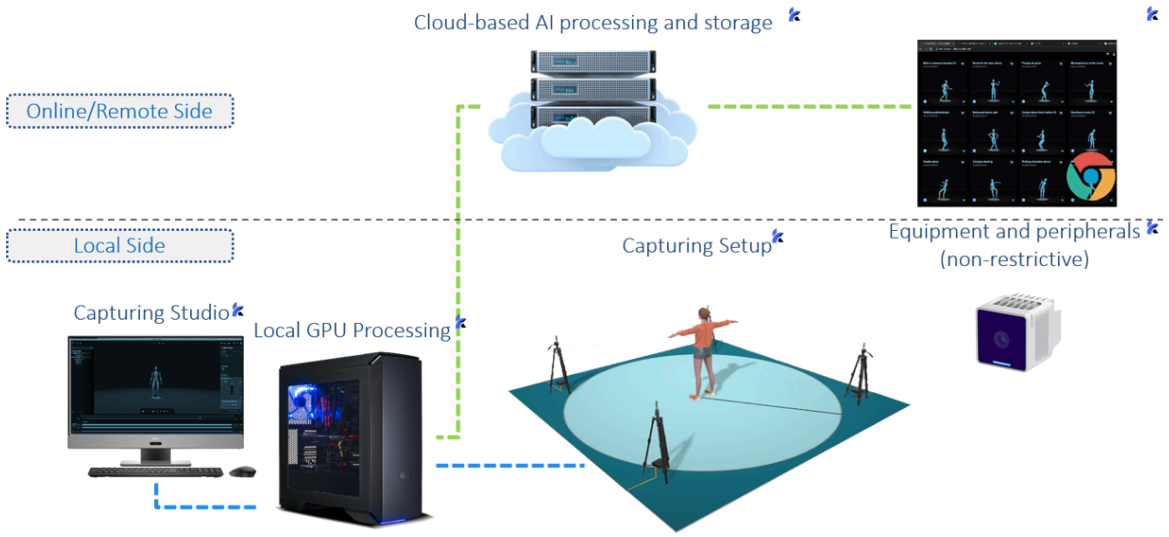

Diagram 1 – Moverse Architecture Overview:

This diagram illustrates the hybrid architecture of the **Moverse motion capture and AI processing pipeline**.

- On the **Local Side**, body motion data is captured through a **studio setup** using non-restrictive depth cameras and processed on a **local GPU workstation** for real-time visualization.
- On the **Online/Remote Side**, captured sequences are uploaded to **Rydlr Cloud Services** for large-scale AI processing, data curation, and storage.
- The **cloud interface** provides visualization and management of captured motions via a browser-based dashboard, enabling remote access and collaboration.

8. MotionBlendAi - development server - fivetran-github code repository

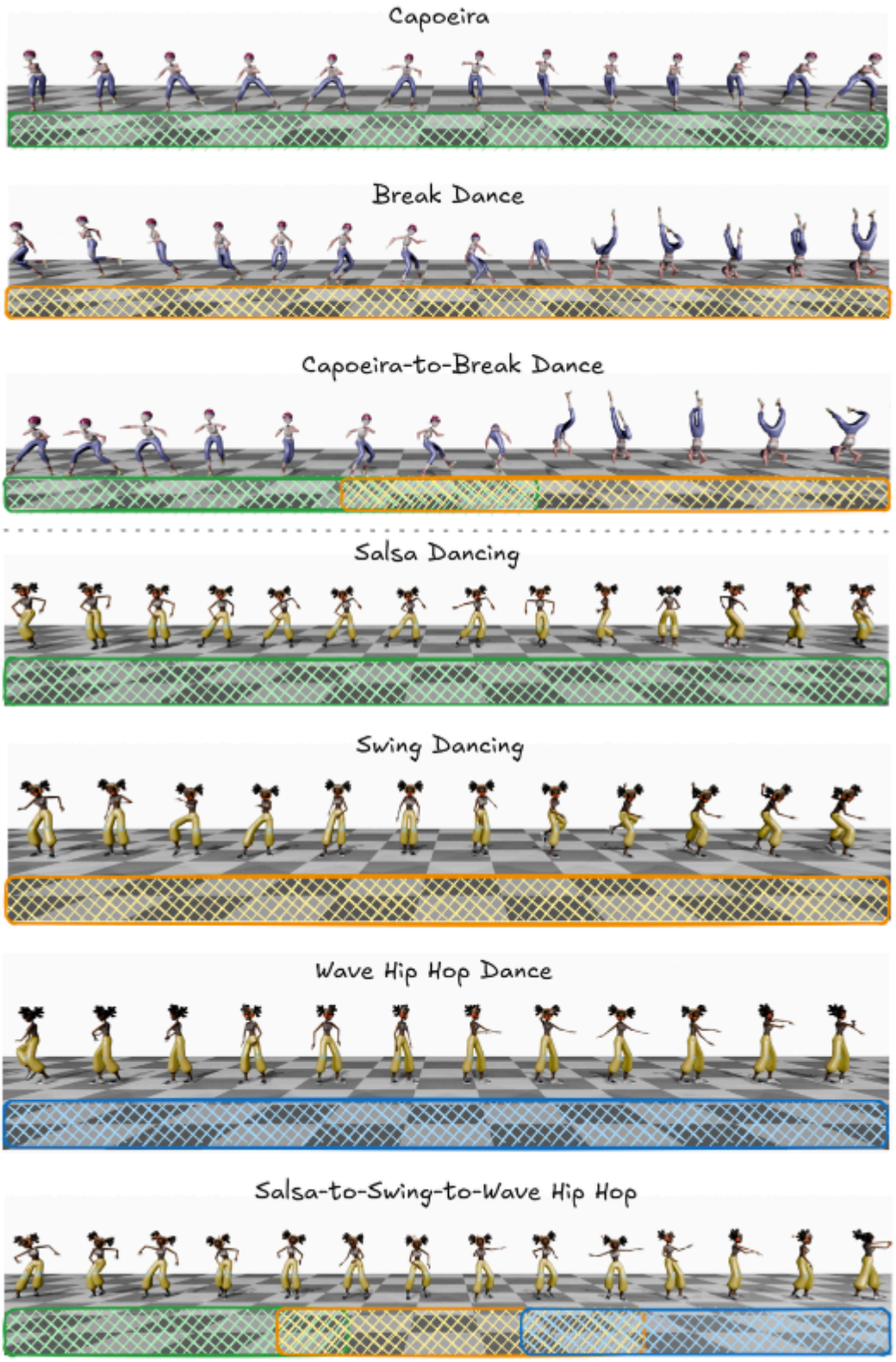

Diagram 2 – Motion Blending Results:

This figure showcases the **single-shot motion blending outputs** from the **Moverse model** trained on the Mixamo dataset.

- Each row represents a sequence of motion frames, illustrating smooth transitions between different dance styles such as *Capoeira*, *Break Dance*, *Salsa*, *Swing*, and *Wave Hip Hop*.
- The bottom rows demonstrate **multi-motion blending**, where the model generates continuous and realistic transitions (e.g., *Salsa-to-Swing-to-Wave Hip Hop*) using temporally conditioned control.
- The color-shaded areas under each sequence indicate the contribution of each source motion to the final blended output, showing precise temporal control achieved by the model.

References

1. Eleni Tselepi, Spyridon Thermos, and Gerasimos Potamianos. *Controllable Single-shot Animation Blending with Temporal Conditioning.* University of Thessaly & Moverse, 2025. arXiv:2508.18525.
2. Ethan Perez et al. *FiLM: Visual Reasoning with a General Conditioning Layer.* AAAI Conference on Artificial Intelligence, 2018.
3. Adobe Systems Inc. *Mixamo Dataset.* 2021. https://www.mixamo.com
4. Rydlr Cloud Services Ltd. *Tier-2 Neo-Cloud and VAULT FS Architecture Documentation.* Internal Whitepaper, 2025.
5. iXAfrica Data Centres Ltd. *NBOX1 Campus Technical Sheet.* Nairobi, Kenya, August 2025.
6. NVIDIA Corporation. *DGX and HGX Platform Architecture Overview.* Technical Datasheet, 2024.
7. Vast Data Inc. and WekaIO Ltd. *High-Performance AI Storage Architecture Guides.* 2023–2024.
8. Rydlr Cloud Services Ltd. *Moverse: Markerless Motion Capture and MotionBlendAI Framework.* Technical Design Document, 2025.

Address: 1402 Office Suites, GTC Towers, Waiyaki Way,
P. O. Box 16491-00100, Nairobi.
www.rydlr.com

End-to-End Framework for Tokenizing Motion Blends with Agentic AI on Arc Blockchain

Introduction and Context

Tokenizing human behavior — specifically *motion blends* (captured human motion data) — unlocks new ways to monetize and share movement across media, sports, health, and simulation domains. This framework outlines an end-to-end solution that combines **agentic AI** (autonomous AI agents) with blockchain smart contracts to represent and trade motion data as digital tokens. The solution is designed for the **USDC x Arc Hackathon**, leveraging *Arc*, Circle's new EVM-compatible Layer-1 blockchain that uses USDC as native gas[1]. By integrating with **Rydlr Cloud Services** infrastructure and partners, the framework can ingest real-world motion through **Moverse**'s markerless motion-capture technology, process it with AI on Rydlr's GPU clusters, and then tokenize it on Arc for secure attestation and payment. The goal is to create a robust, *verifiable off-chain data to on-chain value* pipeline inspired by emerging standards like ERC-8001 (verifiable off-chain data with on-chain attestation)[2]. We will detail how agentic AI controls payment logic and fulfillment conditions, define appropriate token standards and oracle designs, and illustrate validation flows and monetization mechanisms. This blueprint aligns with Rydlr's Q4 2025 roadmap (in partnership with Accelerance)[19] to onboard three strategic customers, and it suggests hackathon milestones to validate the approach in real-world scenarios.

Architecture Overview

At a high level, the system comprises **three layers**: (1) **Motion Data Capture & AI Processing (Off-Chain)**, (2) **Blockchain & Smart Contracts (On-Chain)**, and (3) **Application & Use Case Integration**. Below is an overview of key components and their interactions:

- **Motion Capture Input:** Human motions are captured via **Moverse**'s *real-time markerless motion capture* system[3]. Moverse's platform uses off-the-shelf cameras and AI to track full-body movements live, producing high-fidelity 3D animation data (joint coordinates, skeletal animation frames, etc.). It also provides *AI-based reprocessing* for cleanup and a *Generative Motion Library* to create unique blended animations[3][4]. In other words, raw human behavior is digitized as reusable "**motion motifs**" (discrete motion sequences).

- **Rydlr Cloud AI & Data Services:** Captured motion data flows into Rydlr's cloud infrastructure for processing and storage. Rydlr operates **NVIDIA H100 GPU clusters** to run heavy AI models (e.g. pose estimation, action recognition, or even large language models for agent logic). Processed data and features are indexed in **Elasticsearch** (for fast querying of metadata and logs) and warehoused in **BigQuery** (for analytics and model training on large datasets). Crucially, **Qdrant (vector DB)** stores high-dimensional embeddings of motion sequences – e.g. each motion motif could be embedded as a vector representing its style or outcome. This enables similarity search and matching; for example, retrieving similar past motions for comparison or blending. (A relevant analogy is an AI hackathon project that "banked" short robot sensor-action sequences as vectors in Qdrant to suggest safe next actions[5], or another that matched dance clips to music via vector search[6].) **Fivetran** is used to ETL and sync data between these components, ensuring that motion data from capture or edge devices flows into the analytics and AI pipeline in near real-time. The *off-chain layer* thus provides the AI interpretation and data management needed before committing anything on-chain.

- **Arc Blockchain & Smart Contracts:** The on-chain layer resides on **Arc**, which offers stablecoin-denominated gas fees and sub-second finality[1] ideal for handling frequent micro-transactions and rapid agent interactions. Smart contracts deployed on Arc handle **tokenization** of the motion data and enforce payment or attestation logic. We propose using an **NFT standard (ERC-721 or ERC-1155)** to represent each unique motion asset ("motion motif token"). Each token's metadata can include a reference (e.g. IPFS or Cloud URL) to the motion capture data (e.g. a 3D animation file or key parameters), as well as cryptographic hashes or signatures attesting to its validity (more on attestation below). For multiple similar actions or blended motions, ERC-1155 (multi-token) could be utilized if grouping is beneficial. In addition, standard **ERC-20** tokens (USDC on Arc) facilitate payments. Arc's predictable USD-denominated gas and opt-in privacy features help ensure transactions (like micropayments for each motion usage) are low-friction and can preserve confidentiality where needed[1].

- **Agentic AI Controller:** An **agentic AI** module bridges the off-chain and on-chain world. In this design, the agent is an AI-powered software entity that can **observe** off-chain events/data, **decide** when conditions are met, and **act** by submitting on-chain transactions[7]. The agent logic may be implemented using an LLM or a custom rules engine: for example, it might ingest natural language instructions from users (e.g. *"Pay the athlete when they exceed 10m/s sprint speed"* or *"Mint a token if patient completes 30 rehab sessions"*), translate them into formal conditions, monitor the data (via Elasticsearch queries or streaming analytics), and trigger the appropriate on-chain function call. Unlike a static smart contract, this AI agent can adapt and reason – for instance, it could adjust thresholds or verify anomalies by cross-referencing similar past data from Qdrant (for pattern recognition) before deciding to execute a transaction. The agent is essentially an **oracle client** that runs off-chain but is authorized to send attested data or commands to the blockchain. It might utilize Circle's Developer-Controlled Wallet SDK to manage keys and sign transactions, ensuring secure and programmatic movement of USDC (as required by hackathon tech)[8][9].

- **Oracles and Attestation Workflow:** To trust data from off-chain, the solution uses an **oracle mechanism with verifiable attestation**. When the AI agent (or any data provider) wants to trigger an on-chain action based on motion data, it must provide a proof that the condition is met. We can implement a lightweight attestation protocol inspired by **ERC-8001**. In simple terms, the agent (initiator) posts an **Intent** (e.g. *"User X completed motion Y at time Z"*) along with a cryptographic signature (EIP-712) over the relevant data[2]. One or more designated **validators/participants** (which could be other agents, IoT devices, or human approvers like a coach or doctor) provide **Acceptance Attestations** – essentially signatures confirming the data or agreeing that the event is valid[2]. Once the required attestations are collected (e.g. both the sensor and the supervising authority sign off), a smart contract function can be called with these proofs to *execute* the intent (e.g. mint the NFT or release payment). The contract verifies all signatures against known public keys and checks that they correspond to the expected participants and data (nonces, expiry can be used to prevent replay, as per ERC-8001). Only if valid attestation(s) are present does the contract carry out state changes. This design ensures **verifiable off-chain data with on-chain enforcement**: the actual motion files or detailed data stay off-chain (for privacy and volume reasons), while the blockchain stores a verifiable claim or hash of that data plus endorsements that it is correct. By modularizing attestation, different use cases can plug in different trust models (single oracle, multi-sig, threshold quorum, etc.) without changing the core token contract. For hackathon purposes, a basic design might involve the agent itself and one additional authority signing the data. In future, this could be extended with more sophisticated or decentralized oracle networks (e.g. a Chainlink OCR feed or a decentralized attestation registry).

- **Application Layer & Partner Integration:** Finally, the tokens and payment flows interface with end-user applications and Rydlr's partners. Examples include: a media production studio's asset library (which consumes motion NFTs), a sports analytics dashboard for coaches (showing performance tokens earned by athletes), a hospital's patient DApp for tracking rehab compliance (issuing achievement tokens), or an airport's digital twin control panel (aggregating foot traffic tokens). These apps interact with the blockchain via web or mobile frontends and can also feed additional input to the agent (e.g. user-defined rules or marketplace transactions like buying a token). Rydlr's partner **Moverse** from Greece plays a critical role by providing the front-end capture technology. In effect, Moverse devices/software at the edge capture motion, then Rydlr's cloud and AI orchestrate the data, and Arc blockchain handles the value layer (tokenization and transactions). The entire flow is designed to be *compatible with Rydlr's active use cases* in entertainment, sports, biomechanics, and digital twins, as we detail next.

Tokenization and Data Flow Details

To make the framework more concrete, we outline the step-by-step flow from motion capture to token issuance, highlighting token standards, oracle design, and validation at each stage:

1. **Capture & Feature Extraction:** When a motion event begins, Moverse's system records the user's motion in real-time (e.g. an athlete performing a jump, an actor acting out a scene, or a patient doing a physio exercise). The raw data (video frames or depth sensor data) is processed by Moverse's AI to yield a *motion capture output* – for instance, a sequence of skeletal joint coordinates over time. Moverse's cloud or the on-prem setup then applies *AI reprocessing* to clean noise and perhaps apply generative enhancements (creating a smooth "motion blend" that can be reused in animation)[3]. The output might be stored as a 3D animation file (FBX, GLB) or as a set of parameters (e.g. angles, durations). Importantly, Moverse could also label the motion with a **Motif ID** or category (e.g. "two-handed swing," "rehab exercise #3") if it matches known templates, or even generate a new motif. This output is sent securely to Rydlr's cloud (possibly via a Fivetran connector or direct API integration).

2. **AI Analysis & Condition Monitoring:** In Rydlr's cloud, the incoming motion data triggers analysis jobs. For example, a **pose analysis model** might calculate metrics like speed, accuracy, or form compliance. The data is indexed in Elasticsearch for any textual or time-series logs (e.g. *"user did 10 reps, average knee angle 70°"*). Simultaneously, a **vector embedding** of the motion is computed (using a model that maps motions to an embedding space), and stored in Qdrant for future similarity queries (this enables finding related motions or checking if this motion has been done before by the user, etc.). The AI agent subscribed to this pipeline now *observes* the results. It compares the data against the conditions set for tokenization or payment. For instance:

- In a sports scenario, the agent checks: did the athlete exceed the threshold (e.g. jump height > 2m)? If yes, it prepares to trigger a reward.

- In a rehab scenario, the agent checks: is this the 30th session completed by the patient? If yes, trigger an achievement token and an insurance payout.

- In a media scenario, if a new motion motif is recorded, the agent might automatically tokenize it for IP protection, or if an actor's move is reused from the library, the agent logs a *reuse event* to later trigger licensing fees.

The agent can also use more complex reasoning here. For example, it could query Qdrant to ensure the motion is indeed novel and not just a duplicate of an earlier one (to avoid redundant token minting). Or it might run a quick predictive model to ensure the motion data quality is above a certain confidence. Once the agent *decides* that a condition for an on-chain action is met, it proceeds to the next step.

On-Chain Attestation & Token Minting: The agent now formulates a transaction to Arc blockchain. This could be a call to a **MotionToken contract** (an ERC-721 NFT contract) to mint a new token representing the motion, or a call to a **Payment contract** to release USDC to a user. In both cases, the transaction carries along an attestation payload. We design the smart contracts with functions like `mintMotionNFT(address recipient, bytes32 dataHash, bytes calldata attestation)` or `releasePayment(address to, uint256 amount, bytes calldata attestation)`. The `attestation` field might contain the agent's EIP-712 signature and any additional participant signatures, plus metadata like an expiration timestamp and a hash of the motion data or condition details. The contract, upon receiving the call, will **validate the attestation**:

1. It knows the permitted signer(s) (e.g. the agent's public key, plus maybe a partner key like a hospital's key for medical cases).
2. It verifies the signature(s) matches the expected message (for instance, a struct containing `userID`, `motionID`, `metric >= threshold`, etc., hashed and signed).
3. It checks if the attestation is fresh (not expired, not used before via a nonce).

If validation passes, the contract mints the NFT to the recipient's address (embedding the `dataHash` which can tie back to the actual motion file stored off-chain) or executes the stablecoin payment by transferring USDC from a treasury or escrow. If the attestation fails (invalid or missing), the transaction is reverted – ensuring that unverified data cannot trigger token creation or payments. This design effectively makes the **smart contract an autonomous enforcer** of conditions, while the *agentic AI off-chain* handles the complex detection of those conditions. The separation of roles improves security (on-chain won't execute without cryptographic proof) and flexibility (off-chain AI can be updated or use advanced logic without needing to alter on-chain code).

1. **Token Metadata and Standards:** The newly minted **Motion NFTs** contain metadata that links back to the behavior. Typically, the metadata JSON (stored on IPFS or BigQuery with a hash reference) would include:
2. **Name/ID of the Motion** (e.g. *"Fastball Pitch #3 by Player X on 2025-10-20"* or *"Rehab Exercise Complete – Session 30"*).
3. **Description and Context:** e.g. *"3D motion capture of a 95mph baseball pitch, captured with 60 FPS markerless system, including skeletal animation data."*
4. **Data Hash:** a cryptographic hash of the raw motion data or key metrics (so anyone with the data can verify it matches what was tokenized).
5. **Attestation Proof:** optionally, the on-chain attestation or a reference to it (some systems use a separate Attestation Registry contract; for simplicity, the NFT tokenURI could point to a JSON that contains the signatures or an IPFS CID of an attestation certificate).
6. **Usage Rights or License Terms:** textual or code references to what owning the token means (for example, a reference to a license contract or legal agreement).
7. Potentially **DID (Decentralized Identifier)** of the performer for authenticity (ensuring the token is linked to, say, the athlete's or actor's identity without revealing personal data; could use a DID registry to confirm this identity off-chain).

For payments, the USDC transfers are simply recorded as events (receipts) on-chain, which can be aggregated per user. In Arc's stablecoin environment, fees and payments are in USDC, simplifying the accounting.

Monetization Mechanisms & License Enforcement: Once tokenized, motion assets can be monetized in various ways. The framework should support:

1. **Direct Sales/Marketplace:** The owner of a Motion NFT (e.g. the content creator or athlete) could list it on a marketplace for others to purchase. For instance, a game studio might buy an NFT of a particular dance move to use in a video game. Because Arc is EVM-compatible, existing NFT marketplace contracts or integrations can be used with minimal changes.
2. **Royalties and Conditional Payments:** Smart contracts can be set up such that when an NFT is transferred or used commercially, a fee is automatically paid to the original creator. This can be done via ERC-2981 NFT royalty standard or custom logic in the transfer function. Rydlr already envisions a business model of charging for *reuse* of motion data. In fact, in a sample agreement, **each reuse of a motion capture output ("Motif") beyond the originally scoped project incurs a $7 license fee, with 400 complimentary reuses included**[10][11]. We can automate this: imagine an NFT representing the motif is initially minted to the original customer with a usage-count variable. Each time the customer (or anyone who buys the NFT) wants to use the motion in a new production, they call a `registerReuse()` function on the NFT contract. This function could require a $7 USDC payment (except if free credits remain, which could be tracked in the contract state). Once paid on-chain, it emits an event logging the authorized reuse. Because this is on-chain, Rydlr can directly receive the USDC to its wallet without relying on quarterly manual reports[12], and the NFT's state can record how many times it was reused. This is just one example of encoding contract terms into token mechanics. If broader royalty sharing is needed (for example, Rydlr also had a 2% gross revenue royalty on a project in that agreement), a more complex structure involving stablecoin revenue-sharing contracts could be used; however, for hackathon scope, focusing on per-use fees and automated micropayments is likely sufficient.
3. **Subscriptions or Access Tokens:** Another mechanism is using *soulbound tokens* or badges to track behavior that can unlock benefits. For instance, if a patient accumulates 10 rehab exercise NFTs, they could automatically receive a "Compliance Reward" token that could be non-transferable but redeemable for an insurance discount or a physical reward. The agent could monitor counts and issue such tokens as milestones (this would be a hackathon user validation milestone to demonstrate).
4. **Data Marketplace and Analytics:** Rydlr's roadmap includes turning data into value for strategic customers. With tokenized motion data, an external party (say a biomechanics research company or a sports equipment manufacturer) could query an **aggregated index** of tokenized motions (with user consent) and pay per query or per dataset. For example, a company might pay to access 1000 tokenized running gait profiles (each being an NFT that grants access to the underlying data). A possible design is an **oracle-managed data vault**: the NFTs might not contain raw data on-chain, but a purchase or

rental of the NFT triggers the agent (via an *exit oracle*) to grant the buyer access to the off-chain dataset (perhaps by generating a decryption key or API access token). Payment for this is on-chain, while data delivery is off-chain but attested. This approach monetizes the dataset while still using blockchain for the value transfer and audit trail.

Oracle Design – Entry & Exit Types: In the above flows, oracles appear in two forms:

1. **Entry Oracles** bring off-chain data onto the blockchain (e.g. our AI agent posting attestations of motion events). These need to guarantee data integrity and timeliness. Our design uses a *first-party oracle* model (Rydlr/Moverse's system itself acts as oracle by signing data) combined with multi-party attestation for added trust. In future, a decentralized oracle network or a protocol like Chainlink Functions could fetch motion data from a URL and verify signatures before delivering to Arc, adding redundancy. The *agreement types* for entry oracles could be: (a) **Single-source attestation** (trusted partner provides data, simpler but central), or (b) **Multi-source consensus** (multiple independent sensors or services must concur on the motion measurement, enhancing reliability).
2. **Exit Oracles** take on-chain events to trigger off-chain actions. For example, if a smart contract emits an event that a payment was made, an off-chain service could listen and then unlock premium content in a media app or update a record in a hospital database. In our framework, the agent itself can serve as an exit oracle as well, since it can subscribe to blockchain events using a Web3 provider. If, say, a motion NFT is sold on-chain, the agent could catch that event and notify the content owner or update a licensing server. Another exit oracle scenario: a *robotics control system* could be an agent that listens for on-chain authorization (e.g. an NFT granting access to a facility) and then actuates a physical turnstile or device. The hackathon project could demonstrate a simple exit oracle by, for instance, toggling a dummy IoT device when a token is minted (simulating a device receiving an on-chain signal).

Validation Flows: Throughout, validation is critical:

1. **Motion Validation:** Ensure the captured data is authentic (coming from a valid Moverse device and not tampered). This might involve device signatures or secure upload. In a hospital pilot, patient motions might be signed by the capture software plus countersigned by a clinician's app to confirm it's the correct patient performing.
2. **AI Validation:** The agent's decisions should be traceable. We can log every decision it makes (and why) to Elasticsearch, so that later one can audit why a payment was triggered. If the agent is an LLM, we might include prompt templates that output a rationale which we store (useful for debugging and trust).
3. **On-Chain Validation:** We already covered attestation verification by the contract. Additionally, the contracts themselves should be tested for correctness (e.g. using hardhat tests) to avoid bugs in payment conditions. Using standardized templates (ERC-721 for NFT, OpenZeppelin libraries, etc.) reduces risk.
4. **User Validation Milestones:** For a hackathon, we would demonstrate incremental validation:
   a. *Milestone 1:* **Data Ingestion Demo** – Show a live or recorded motion being captured and the data arriving in the pipeline (e.g. display key metrics or a skeleton animation on a dashboard). This proves the capture->cloud link.
   b. *Milestone 2:* **Agent Condition Trigger** – Simulate a condition (e.g. feed the agent a motion file that meets the criterion) and show the agent detecting it and preparing an on-chain call (perhaps logging "Condition met: preparing to mint token").
   c. *Milestone 3:* **On-Chain Token Minting** – Execute the blockchain transaction on Arc testnet, resulting in an NFT visible in a block explorer or a wallet. Also demonstrate a USDC test transfer if part of logic (Arc testnet USDC).
   d. *Milestone 4:* **End-to-End Use Case** – For example, have a user perform a simple action (like a jumping jack caught on webcam), the system processes it, and as a result the user receives a "Workout Completed" NFT in their wallet and 5 USDC in a reward wallet. The entire flow from physical action to digital reward is thus validated.

Each milestone can be video-recorded or live-demoed. User testing can involve having a second person intentionally do an incorrect motion to show the agent does not trigger (proving the specificity of validation).

Use Case Mapping and Compatibility

The framework is designed to be flexible for multiple domains, aligning with Rydlr's use cases:

- **Media & Entertainment:** A film or game studio can use this system to capture actor motions (stunts, dances, etc.) and instantly tokenize them. The NFTs serve as **proof of ownership and licensing rights** for those motion assets. Using Arc smart contracts, the studio can automatically enforce licensing fees whenever that motion is reused in another production. For example, if Studio A buys a motion NFT from Rydlr's library (captured from a famous stunt performer), and then uses it in a new movie sequel, the smart contract could require them to pay a fee (as described, e.g. $7 per reuse) which goes to Rydlr or the original creator[10][11]. This on-chain enforcement simplifies royalty tracking. Additionally, the agentic AI can help here by monitoring usage: it could, say, scan media for that motion (using embedding similarity – a form of *content ID* for motion) and alert if an unlicensed usage occurs, then automatically issue a tokenized invoice or initiate an escrow on Arc. While full autonomous IP enforcement is futuristic, the framework lays groundwork by having every licensed usage logged on-chain in real time. Creators benefit from a new revenue stream (possibly even setting up an NFT marketplace for fan engagement, where iconic motions from a movie are sold as collectibles).

- **Sports Analytics:** In sports, tokenizing an athlete's key performance metrics can create both an audit trail and a fan economy. For instance, each time a sprinter breaks their personal record, an NFT could be minted to commemorate it (possibly containing the motion data of that record run). These "moment" NFTs can be sold to fans or sponsors, similar to how NBA Top Shot sold highlights – but here it's raw motion data and

biomechanical performance that's tokenized, which teams and equipment manufacturers might find valuable. The agentic AI could also facilitate **automated bonus payouts**: athletes often have performance clauses (e.g. a bonus if they run under a certain time). The agent can detect the condition and execute a stablecoin payout trustlessly, eliminating ambiguity. Moreover, coaches could issue challenges via the system (e.g. "Complete 100 practice shots this week for a reward"), which the player's motion tracking will verify and then pay out, creating a gamified training incentive. Since Arc has fast finality, these micro-rewards (few USDC at a time) happen quickly without the athlete worrying about gas in volatile crypto – it's all stablecoin-based and user-friendly.

- **Biomechanics and Healthcare:** Rydlr's pilot in a Mozambique hospital can greatly benefit from this framework. Patients doing rehabilitation exercises often need to be monitored for compliance and correctness of movements. By tokenizing each successful session or milestone, we create a *digital health record* of their physical progress. A patient could accumulate NFTs for each stage of recovery (these could even be soulbound tokens bound to their DID to avoid any speculation). These tokens, carrying attested data of their exercise performance, could be shared with doctors or insurers as proof for claims. Additionally, governments or NGOs could **incentivize patients** with stablecoin rewards for completing their rehab (a form of conditional cash transfer for health). The agentic AI ensures that the condition (exercise done properly) is met by analyzing the motion (e.g. range of motion achieved above a threshold) before triggering a payment. Privacy is paramount here – Arc's opt-in privacy could be used to shield the patient's identity or details of the exercise on-chain[1]. Only aggregate or authorized views would be visible, possibly using zero-knowledge proofs to attest "yes, a legitimate patient completed the session" without revealing personal data. The framework thus enhances transparency (everyone can verify a token was issued with certain attestations) while preserving privacy of the actual content.

- **Digital Twins & Smart Infrastructure:** In the IATA Smart Corridors context (airports), tokenizing behavior can mean tracking objects (baggage, vehicles) or passengers in a digital twin. For example, each passage of a person through a corridor could emit a token event (not necessarily an NFT each time, but perhaps a standardized data token or an increment on a counter). This helps create a verifiable log of throughput. If we consider environmental incentives, an airport might want to reward airlines or ground handlers for efficient movement (e.g. *"if you get passengers through security in under 10 minutes, you earn a token"*). The agent can monitor times and distribute rewards accordingly. Conversely, if a safety violation occurs (e.g. too many people in a zone), an agent could trigger a penalty or alert token. In such cases, the **entry oracle** could be IoT sensors (cameras, RFID) providing data to the agent, and the **exit oracle** might inform airport systems or even adjust digital signage. Tokenization here is less about tradeable assets and more about **verifiable attestations of events** (a footfall count, a safety clearance) that can integrate with smart contracts for service-level agreements. Arc's stablecoin nature suits B2B settlements in this scenario (airline pays airport fees in USDC based on actual tokenized usage data, rather than estimates).

Each of these use cases utilizes the same core framework but with slight configuration changes (different tokens or condition logic). This demonstrates the *creativity and efficiency* of the approach: by abstracting human motion into a digital token layer, we enable **agentic automation** in a multitude of real-world processes. Rydlr's organizational structure, which includes domain experts and partners in each area, can plug into this common platform. For instance, Moverse provides the front-end in media and sports, a medical devices partner might provide sensors in healthcare, and an IoT partner could instrument the airport; but all data flows into Rydlr's cloud and the Arc blockchain for unified handling.

Technical Components and Standards

To ensure clarity, we summarize some of the key technical choices in tables below.

Table 1: Key Technologies and Their Role

Component	Role in Framework	Notes
Arc Blockchain (Circle)	On-chain execution and settlement. Smart contracts enforce tokenization and payments. Uses USDC as gas for predictable fees[1].	Sub-second finality and privacy controls ensure real-time and confidential transactions.[1]
USDC Stablecoin	Medium of value for payments, gas, and rewards. All fees and payouts done in USDC for stability and ease of accounting.	Stablecoin usage avoids crypto volatility and makes costs transparent (useful for enterprises).
ERC-721/1155 NFTs	Representation of motion assets (Motion Motifs). Encodes ownership and usage rights of specific motion data.	Each token's metadata includes data hashes and possibly usage count or license terms. Could use ERC-1155 if multiple identical copies or batch minting is needed.
EIP-712 Attestations (inspired by ERC-8001)	Structured off-chain signatures for intents and acceptances[2]. Provide verifiable data for on-chain functions without storing raw data on-chain.	Ensures multi-party agreement on off-chain facts. E.g., agent + supervisor sign that "motion X by user Y on date Z occurred and meets criterion".

Component	Role in Framework	Notes
Smart Contracts (Solidity)	Custom contracts: *MotionToken* (NFT logic + maybe usage tracking), *RewardContract* (conditional payment logic), *AttestationVerifier* (library or contract to verify signatures). Possibly upgradeable or modular for future changes.	Will integrate with Circle's wallet APIs for moving USDC if needed, or hold a treasury of USDC funded by stakeholders (e.g., sponsor deposits funds which contract holds until conditions met). Security audits to be done given financial logic.
Agentic AI Service	Off-chain service (could be Python with web3, or Node.js) running the core agent logic. Observes Rydlr databases, runs AI models (could use frameworks like LangChain for tool use, etc.), and interacts with Arc via web3 or Circle APIs.	This can be containerized and scaled. It uses Rydlr's GPU for any heavy ML (e.g. vision models) and CPU for orchestrating logic. To avoid single point-of-failure, multiple agent instances could run for high availability (they should be deterministic in decisions or coordinate via a message queue to not duplicate actions).
Rydlr GPU Cluster	Runs AI models for motion analysis (pose estimation, feature extraction) and possibly the agent's more advanced computations (e.g. planning, natural language understanding of instructions).	Using NVIDIA H100 ensures capability for real-time processing (critical for immediate feedback use cases, like live sports). Could also host any deep learning models for generative motions (Moverse's GenAI library) and feed those results into the pipeline.
Elasticsearch	Indexes motion event logs, metadata, and possibly transcripts of agent decisions. Enables quick search and aggregation (e.g. find all motions of type X for user Y).	Useful for both the agent's queries (like checking if a condition happened before) and for building user-facing analytics dashboards (e.g. progress charts for patients, or scouting reports for athletes based on indexed data).
BigQuery	Data warehouse for large-scale analysis, historical trends, and training data. Periodically, data from Elasticsearch/Qdrant can be piped to BQ for long-term storage and advanced analytics (e.g. training a new model on all accumulated motions).	This also allows Rydlr to demonstrate insights to clients – e.g. aggregate improvements in patient recovery times, or patterns of motions that cause injuries, etc., which can be valuable services on top of the token platform.
Qdrant Vector DB	Stores embedding vectors of motions for similarity search and clustering. Allows the system to find related motions or detect novelty.	Example: The agent can prevent duplicate token minting by checking if a new motion's vector is too similar to an existing one, suggesting it's essentially a reuse. Alternatively, in media, an artist could query "find me a motion like this sample" and Qdrant+metadata could return an NFT ID that matches.
Moverse Motion Capture	Partner technology providing the raw motion capture capability. Markerless, real-time system to get high-quality motion data from cameras[13]. Also provides **Motifs** (AI-generated motion variations)[4] which can be tokenized as well.	Having Moverse as a partner means the framework can be tested with actual hardware and software in the field. Their generative *Motifs* might be offered as an endless library of animations – these could themselves be minted as NFTs (possibly many variants), creating a new product line of AI-generated motion content with on-chain provenance.

Table 2: Example Token and Oracle Design for a Specific Scenario (for illustration, *Sports Training Reward*):

Aspect	Design in this Scenario
Condition	Athlete completes a training session of 100 jump shots with >70% accuracy. (Data from motion capture and computer vision determining shot made or missed)
Tokenization	No NFT for each session (would be too many), instead a **fungible "RepToken" (ERC-20)** could be used to count completed reps, or simply accumulate in off-chain until milestone. Upon reaching milestone (e.g. 1000 reps), mint an **NFT Badge** (ERC-721) "1000 Shots Club" to athlete's wallet.
Payment	Athlete receives 10 USDC for each session completed, paid from a sponsor's escrow. This uses a **RewardContract** that the sponsor funded with X USDC. The AI agent calls `disburse(athlete, 10 USDC)` with attestation of session completion. The contract checks signature of coach or IoT ball sensor confirming 100 shots were taken. Payment is then made in USDC on Arc (which athlete can later withdraw via Circle's off-ramps if needed).
Oracle/Attestation	Data needed: number of shots and accuracy. Suppose a smart basketball hoop sensor provides an API. The agent queries it and gets a signed JSON: `{"player": "Alice", "shots":100, "accuracy":0.75, "ts":1630000000, "sig": <device_sig>}`. The device's public key is known to the contract. The agent packages this as an attestation (or just passes it along) in the `disburse` transaction. The contract verifies the device's signature (`device_sig`) against its stored public key and checks `shots>=100, accuracy>=0.7`. If valid, it transfers USDC. If any check fails, it reverts.
Validation Flow	Multi-source: The coach's app could also sign off, but to keep it autonomous, perhaps we trust the device alone here. However, the system logs all this data. If a dispute arises (coach says form was bad, shouldn't pay), a human override can be done via an admin function to pause further payouts, illustrating the need for governance controls despite autonomy.

This example shows how flexible the framework is: we can mix and match token types (NFT or fungible) and oracle data as needed, all within the same architecture. The *entry oracle* was the hoop sensor's signed data; the *exit oracle* could be if we wanted to trigger something outside (like notify sponsor or update a leaderboard off-chain after payment, which the agent can handle).

Security, Privacy, and Governance

Because this solution deals with potentially sensitive data (human motion can reveal identity or health status) and real money (USDC payments), security and privacy are paramount:

- **Data Privacy:** Raw motion capture data and personal details will remain off-chain. Only hashes and necessary metrics are on-chain. For additional privacy, Arc's *opt-in privacy* feature could be used to shield the transaction details or balances from public view[1]. Alternatively, zero-knowledge proofs could be employed in future: e.g. prove "the patient did exercise correctly" without revealing the actual motion angles. In early stages, though, restricting access via encryption and need-to-know basis is simpler. Rydlr's cloud should enforce strict access control – e.g. data for hospital use-case is stored in a HIPAA-compliant manner, separate from, say, sports data.

- **Security of Oracles:** The agent and any IoT oracles must be secured to prevent false data injection. Private keys used for signing attestations should be in secure enclaves or HSMs. We might integrate with something like **Chainlink's DECO or API3** for first-party oracles that prove data authenticity from the source. During the hackathon, we can simulate this with simple signatures, but mention of future hardening (like trusted execution environments) is good. On the blockchain side, using well-tested contract libraries reduces risk of exploits. All payments contracts should have fail-safes (e.g. an emergency stop that Rydlr or the sponsor can trigger via multi-sig if something goes wrong, pausing payouts).

- **Agent Oversight:** A fully autonomous agent handling funds raises governance questions. It's important to implement **limits** and **monitoring**. For example, the agent might have a daily USDC transfer cap, and any attempt beyond that requires a manual approval. Also, all agent actions can emit events that an admin dashboard monitors. If the agent starts behaving erratically (due to a bug or malicious attack), Rydlr should have a way to disable its keys or revert unauthorized transactions (perhaps through a timelock that delays certain admin transactions, allowing intervention). This echoes concerns raised in the industry about rogue AI agents and calls for **human-in-the-loop** options[14]. Initially, the agent will be semi-autonomous: it will make recommendations or prepare transactions, but the Rydlr team might manually confirm them during the testing phase. As confidence grows, more actions can be automated.

- **Compliance and Identity:** Because stablecoins and health data intersect with regulations, we should incorporate compliance checks. Circle's platform and Arc likely have built-in compliance tools (KYC for wallets if needed, etc.). If this system is used for payouts, we might need to ensure recipients are verified or not sanctioned. This could involve integrating a compliance oracle that checks wallet addresses before sending USDC (Circle APIs can handle blacklisted address checks). For identity, using Decentralized ID (DID) standards would allow, say, a patient to present a verifiable credential to link their real identity to their blockchain wallet in a privacy-preserving way (so the hospital can be sure who is who without exposing identity on-chain). Such

integration can be a future improvement once core functionality is proven.

- **Performance and Scalability:** With potentially thousands of motions per day (e.g. if this scales to many users), we need to ensure the solution can handle throughput. Arc's high TPS and sub-second finality is a plus. The agent can batch some operations if needed (e.g. aggregate micropayments and settle in one transaction to save fees). Rydlr's cloud is presumably scalable (Kubernetes or similar to spin up more processing pods). Using event-driven architecture (e.g. a queue where each motion captured triggers a workflow) will help manage load. Also, one can differentiate between *real-time critical* actions (like immediate feedback in sports) and *batch actions* (like end-of-day minting of all achievements). Not everything must be on-chain instantly; the agent can schedule less urgent transactions during off-peak times, especially since Arc has predictable fees, it might not be necessary from a cost perspective, but from a network load perspective it could help.

Roadmap Alignment

This framework is not just theoretical; it aligns with Rydlr's strategic roadmap as the company looks to commercialize its solutions: - By Q4 2025, Rydlr aims to **convert three strategic customers** (with support from Accelerance). These are likely in the verticals we discussed (for example, a film studio in media, a sports franchise or academy, and a healthcare provider or government pilot).

The blueprint we've outlined can be *rapidly tailored* to each of these with minimal changes: the core infrastructure remains the same, only front-end interfaces and some parameter tuning differ. This reuse of a common platform can accelerate onboarding of customers.

During integration, Rydlr can demonstrate the security (attestations), the automation (agentic payouts), and the monetization (token licensing) to convince stakeholders of the value. For instance, for the film studio, the fact that **Rydlr's platform can automatically charge for every reuse of a motion capture motif and provide a transparent ledger of usage** will be very attractive (it turns what used to be an onerous reporting task into a seamless revenue stream)[10][11]. For the sports client, showing an interactive dashboard where the athlete's on-chain achievements and earnings update live can set the company apart. Thus, this hackathon project could serve as the prototype that Rydlr then customizes and deploys to those clients in Q4 2025.

- **Accelerance partnership**[19] likely provides guidance on enterprise readiness – our framework's emphasis on compliance, scalability, and real use cases reflects that. We also considered business model aspects like royalty enforcement and data licensing, which show a clear path to ROI for clients (e.g. the Cloud Services Agreement snippet in the data room suggests Rydlr plans to have structured API licensing for a large motif repository with high ROI, meaning the company is thinking about monetizing data by usage at scale).

Hackathon Goals

For the hackathon itself, success will be measured by delivering a **functional prototype** that hits key points:

1. **Demonstration of Arc integration:** All on-chain components should run on Arc testnet – deploying contracts, using USDC as gas, showing fast transactions. For example, minting an NFT and seeing the tx confirm in sub-second time, which we can screen-record.

2. **AI-driven Payment Flow:** A showcase where AI triggers a stablecoin payment in response to a natural input. This could be as simple as a chatbot interface where one types "If I finish my workout, pay me $5" and then upon simulating the workout completion, the system makes the transfer. This ties directly to the hackathon's theme *"AI interprets intent and Arc executes it with USDC"*[15][16].

3. **Motion Tokenization in action:** Capture a sample motion (even if we use a pre-recorded motion file due to demo constraints) and run it through the pipeline to mint a token. We could prepare a 3D animation viewer to visualize the motion and prove it matches the token's data (for instance, load the NFT's IPFS link in a viewer to show the captured motion playback). This will wow judges on the novelty of tokenizing motion (a step beyond typical static NFTs).

4. **User Interface & Milestones:** Provide a clear, simple interface for demo – maybe a web dashboard showing "Motions Captured: X, NFTs Minted: Y, Rewards Paid: Z USDC" updating in real-time. Also, perhaps an interface for an admin to input rules (like set a threshold or initiate an intent that requires multi-party signing). Hackathon judges appreciate when the solution is easy to understand and interact with, on top of the technical depth.

In summary, this blueprint lays out a comprehensive, future-forward system that ties together the physical and digital, AI and blockchain, in service of making human actions into verifiable digital assets. It leverages Arc's stablecoin-centric blockchain to ensure the economics are sound (no volatile gas or token), and uses agentic AI to add intelligence and autonomy to processes that were previously manual. From a technical perspective, it incorporates cutting-edge concepts like multi-party attestation (ERC-8001 style coordination)[2] and AI-orchestrated smart contracts, while grounding them in practical, revenue-generating use cases (as evidenced by Rydlr's motif licensing scheme and real pilot projects).

By implementing this framework, Rydlr and its partners can pioneer a new category of **"motion tokens"**: a digital asset class where **movement is money** – where every jump, swing, or step can trigger value creation in a trusted, automated way[17][18]. This would not only give Rydlr a strong entry in the Arc hackathon, but also position it at the forefront of Web3 innovation in industries ranging from entertainment to healthcare.

Sources & References

[1] Circle Unveils Layer-1 Blockchain Arc, Reports $428 Million Q2 Loss
https://www.coindesk.com/business/2025/08/12/circle-unveils-layer-1-blockchain-arc-reports-usd428-million-q2-loss
[2] ERC-8001: Agent Coordination Framework
https://eips.ethereum.org/EIPS/eip-8001
[3] [4] [13] Accelerating 3D Animation and Markerless MoCap Workflows
https://moverse.ai/
[5] [6] Thinking Outside the Bot with 2025 Hackathon Winners - Qdrant
https://qdrant.tech/blog/vector-space-hackathon-winners-2025/
[7] [14] Beyond the Blocks: How Tokenization and Agentic AI Will Reinvent Finance | by Gaurav Singh | Medium
https://gauravsingh1.medium.com/beyond-the-blocks-how-tokenization-and-agentic-ai-will-reinvent-finance-cc897026e80b?source=rss------ai-5
[8] [9] [15] [16] AI Agents on Arc with USDC | Lablab.ai
https://lablab.ai/event/ai-agents-arc-usdc
[10] [11] [12] Cloud Services Agreement _ Rydlr Cloud Services Ltd.
[17] [18] The Next Big Thing in Crypto/ Blockchain — How Tokenizing Individual Behavior Can Lead to Meaningful Change | by BCGonTech Editor | BCGonTech | Medium
https://medium.com/bcgontech/the-next-big-thing-in-crypto-blockchain-how-tokenizing-individual-behavior-can-lead-to-ebbbd37267ff
[19] The 2026 Accelerance Global Software Outsourcing Costs & Trends Guide reveals key factors influencing cost, productivity, and quality. Drawing from data of over 100 firms, it serves as a strategic playbook for leaders in outsourcing

Contact

Ted Iro Opiyo | Chief Executive Officer,
Rydlr Cloud Services Ltd.

+254 729 306 047

ted@rydlr.com www.rydlr.com

Address: 1402 Office Suites, GTC Towers, Waiyaki Way,
P. O. Box 16491-00100, Nairobi.
www.rydlr.com

Rydlr Fund Management Policy Manual:
Green Data Centre Infrastructure Fund Mandate

This policy manual provides a comprehensive framework for managing an alternative investment fund focused on **Green Data Centres**. It covers the fund's governance structure, investment strategy, risk management, operations, investor relations, and ESG policies, ensuring that internal teams operate within a clear set of guidelines.

Fund Management Structure

Governance and Oversight: The fund's governance is anchored by a Board of Directors (an **External Board**) which includes independent members tasked with oversight of the fund manager and protection of investor interests. The Board meets regularly to review fund performance, ensure regulatory compliance, and make high-level decisions. In addition, the fund maintains an **Advisory Board** (often a Limited Partner Advisory Committee, **LPAC**) composed of representative investors. The LPAC's role is to advise on potential conflicts of interest, waive or consent to certain fund restrictions, and provide general oversight on behalf of all investors[1]. This dual-board structure balances professional management with investor oversight. Board procedures and responsibilities are documented and reviewed regularly, and members are fully informed of their accountability for governance and risk management[2][3].

Internal Management: The fund manager (General Partner or management company) is responsible for day-to-day portfolio management subject to the fund's governing documents and applicable law. An internal **Investment Committee** (IC) of senior management reviews and approves all major investments. The IC's decisions must align with the fund's strategy and risk appetite, and minutes are kept as a formal record. The fund manager may also convene an **industry advisory committee** of external experts to provide technical insights on data centre technology and market trends, though such advisors do not have decision authority[4]. Clear segregation of duties is maintained: the portfolio management team sources and executes deals, while a separate risk management function monitors compliance and risk exposure independently[5].

Service Providers and External Partners: The fund engages qualified third-party service providers to perform specialized roles, ensuring robust control and operational efficiency. Key service providers include:

- **Fund Administrator:** An independent administrator is appointed to handle back-office operations. The administrator's duties encompass maintaining the fund's financial books and records, calculating NAV (Net Asset Value) and fees, processing capital calls and distributions, maintaining the investor registry, and preparing financial statements[6]. They also assist with regulatory compliance reporting and operate the investor portal for account statements and communications[7][8]. By outsourcing these tasks, the manager can focus on deal-making while ensuring accuracy and transparency in fund operations[9].

- **Custodian/Depositary:** A licensed custodian (or depositary, where required by regulation) is appointed to safeguard the fund's assets. The custodian holds cash and securities in segregated accounts and maintains custody of asset title documents for physical or illiquid assets[10]. The primary duty of the custodian is loss prevention and protecting investor assets through rigorous controls[11]. In practice, the custodian settles trades, manages cash movements, and may offer ancillary services like cash management, FX handling, and tax reporting to support the fund's operations[12][13]. All alternative investment funds are generally required by law or investor mandate to use an independent custodian for these services[11].

- **Auditor:** A reputable audit firm is engaged to audit the fund's annual financial statements. The **auditor** provides an independent opinion on whether the financial statements present a true and fair view of the fund's financial position[14]. They review valuation of portfolio assets, verify balances, and test internal controls. Annual audits enhance investor confidence and satisfy regulatory requirements; any material issues (e.g. valuation uncertainty) would be flagged in a qualified audit opinion[15].

- **Legal Counsel and Other Advisors:** The fund retains legal counsel (and tax advisors as needed) to advise on fund formation, transaction structuring, and compliance with securities laws. Counsel drafts and reviews all fund documentation, negotiates contracts, and assists with regulatory filings[16]. Other advisors include fund formation specialists and, if applicable, prime brokers or credit facilities for financing needs. External **Depositary** services may be used (especially in EU jurisdictions under AIFMD) to oversee custodial functions and monitor cash flows, adding another layer of asset safekeeping and investor protection[10].

Legal and Regulatory Framework: The fund operates as an **Alternative Investment Fund (AIF)** and is managed by an authorized **Alternative Investment Fund Manager (AIFM)** entity where required by law. The AIFM is a regulated legal entity responsible for the portfolio management and risk management of one or more AIFs[17]. In jurisdictions like the EU, the AIFM must be approved by the regulator and comply with the Alternative Investment Fund Managers Directive (**AIFMD**), which imposes requirements on capital, risk processes, reporting, and conduct[18]. The AIF itself is typically structured as a limited partnership or investment company. For example, in many cases the fund is a limited partnership (LP) managed by a General Partner (GP). The GP or an affiliated management company is the AIFM that holds the necessary license to manage the fund. The legal structure is chosen based on regulatory efficiency and investor eligibility (e.g. a **RAIF** – Reserved Alternative Investment Fund – or other fund vehicle may be used for professional investors). The **fund and manager will obtain all required licenses or registrations** before commencing operations (such as securities regulator registration or an AIFM authorization). Ongoing regulatory compliance is imperative: the fund manager files regular reports (e.g. Annex IV reports under AIFMD, Form PF or equivalent if under SEC oversight) and adheres to limits on leverage or liquidity as applicable. The governance framework ensures that **risk management is**

functionally independent from portfolio management and that a permanent risk manager monitors all risks, per regulatory expectations[19][20].

Documentation Requirements: A comprehensive set of legal documents underpins the fund's formation and operations. These documentation sets include:

- **Incorporation and Governing Documents:** The fund's **formation documents** establish its legal identity and governance. For a corporate fund, this includes a Certificate or Articles of Incorporation and bylaws (or Memorandum and Articles of Association) filed with the jurisdiction of domicile[21]. For a limited partnership, the Limited Partnership Agreement (**LPA**) serves as the constitutional document, outlining the partnership terms, GP authority, investment mandate, and profit sharing[22]. The LPA (or equivalent operating agreement) is the primary contract that binds all investors to the fund's rules and policies. Any separate management agreement between the fund and the AIFM/manager is also executed at inception.

- **Offering Documents:** The fund issues a **Private Placement Memorandum (PPM)** or Offering Memorandum to prospective investors, detailing the investment strategy (e.g. focus on green data centre infrastructure), fund terms, risk factors, and governance structure. This document is crucial for disclosure and regulatory compliance (e.g. ensuring prospective investors are informed of risks and restrictions). Any supplements or updates to the PPM must be provided to investors during fundraising.

- **Subscription Agreements:** Each investor enters into a **Subscription Agreement** when committing capital to the fund. The subscription agreement is the contract wherein the investor agrees to the fund's terms as set out in the LPA/PPM, makes required representations (such as confirming qualified/professional investor status, understanding of risks, no reliance on unauthorized statements, etc.), and commits a specific capital amount[22]. By signing the subscription document, the investor formally becomes a limited partner subject to the LPA terms and grants the fund the right to call capital up to the committed amount. These agreements also often include investor-specific information for AML/KYC and tax purposes.

- **Side Letters:** The fund may negotiate **side letter agreements** with certain investors (typically large or strategic investors) to grant specific rights or clarifications. A side letter is a bilateral agreement between the investor and the fund's GP/manager that **supplements the LPA** for that investor without amending it for others[23]. Common side letter provisions might include fee discounts, Most-Favored Nation (MFN) clauses, enhanced reporting rights (especially on ESG metrics for impact investors), or exemptions from certain terms to satisfy an investor's regulatory requirements. All side letters are reviewed by legal counsel to ensure they do not materially conflict with the LPA or create unfair advantages that could harm the fund. The fund maintains a register of side letter obligations and ensures compliance with each (e.g. by instructing the administrator to apply special fee terms or providing required

reports). Notably, side letters cannot override fundamental fund terms on *a priori* matters like investment mandate or fiduciary duty – they are meant to accommodate reasonable investor-specific needs within the fund's general framework[24].

- **Investment Management Agreement:** If the fund is structured such that an external management company (the AIFM) manages the portfolio, a formal **Investment Management Agreement** (IMA) or **Investment Advisory Agreement** is executed between the fund and the manager. This contract delineates the manager's authority and responsibilities in making investment decisions, the management fee and carry structure, and rights to indemnification, etc. In many cases for internal funds, the LPA may incorporate these terms, but a separate IMA is used when the manager is a distinct legal entity.

- **Service Provider Agreements:** The fund enters into agreements with each key service provider: a Custody Agreement with the custodian/depositary detailing asset safekeeping and cash controls, an Administration Agreement with the fund administrator specifying services (accounting, NAV calc, investor services) and service levels, and an audit engagement letter with the auditor. There may also be agreements for banking services (operating accounts), a loan facility (for bridge financing of capital calls if used), and insurance policies (e.g. D&O insurance for fund directors and PI insurance for the manager).

- **Regulatory Filings and Licenses:** Copies of all regulatory filings (e.g. Form D for a U.S. private offering, AIFMD registration, or local regulatory notifications) are kept as part of fund documentation. The manager's regulatory **licenses** or registrations (e.g. proof of SEC registration or FCA authorization, AIFM license certificate) are maintained on file. These documents evidence the fund's authority to operate and are updated as needed (for example, if the fund expands into new jurisdictions requiring additional filings).

The following table summarizes the **key fund documents and their purpose**:

Document	Description / Purpose
Limited Partnership Agreement (LPA) or Fund Constitution	Governing contract defining fund term, strategy, fee structure, GP powers, and investor rights. Binds all investors under uniform terms[22].
Private Placement Memorandum (PPM)	Disclosure document provided to investors describing the investment strategy (Green Data Centres focus), risks, and terms. Used for offering and regulatory compliance.
Subscription Agreement	Agreement by which an investor commits capital, makes representations (eligibility, etc.), and agrees to adhere to the LPA[23]. Establishes the investor's capital commitment and funding obligations.
Side Letter	Customized agreement with a specific investor granting special terms (fee rebates, reporting, ESG commitments, etc.) without altering the LPA for others[24]. Subject to MFN and compliance review for fairness.
Investment Management Agreement (IMA)	Contract between the fund and the fund manager/AIFM detailing the manager's duties in portfolio and risk management[17], authority limits, and compensation. Sometimes integrated into the LPA for internal managers.
Custody & Administration Agreements	Agreements with the Custodian and Administrator outlining their roles: safekeeping assets, maintaining financial records, calculating NAV, investor servicing, and regulatory compliance support[6][10]. Include service level standards and reporting duties.
Auditor Engagement Letter	Engagement of an independent auditor to annually audit the fund's financial statements and provide an opinion on fair presentation[14]. Ensures financial transparency and trust.
Regulatory Filings & Licenses	Documents evidencing regulatory compliance: e.g. AIFM authorization certificate, SEC registration, offering exemptions filings, etc. Also includes any tax rulings or approvals if applicable. Must be maintained and updated as required by law.

All team members must familiarize themselves with these documents and ensure that operations and decisions remain in compliance with the stated terms. **Changes to any fundamental term** (investment objective, fees, etc.) require proper approvals as set forth in the LPA (often Advisory Board or investor consent) and formal amendments circulated to all investors.

Portfolio Management

Investment Strategy and Focus: The fund's core strategy is to invest in, develop, and finance **green data centre infrastructure** assets. This includes acquisitions of existing data centers (to retrofit or upgrade them to higher sustainability standards), development of new energy-efficient data centre facilities, and financing projects or companies that support green data infrastructure (such as renewable-powered data center campuses). The investment approach combines elements of real assets and private equity – data centers are physical facilities (real estate) but also critical infrastructure enabling digital services[25]. The fund targets opportunities where sustainable practices (efficient power usage, waste-heat recovery, renewable energy integration, etc.) can drive both environmental impact and attractive financial returns.

Specific investment **opportunity types** include:

- *Direct acquisitions*: Buying operational data centers (or portfolios) from existing owners, then implementing value-add strategies like upgrading cooling systems, improving power usage effectiveness (PUE), and contracting renewable energy supply agreements. This provides immediate cash flow from tenant contracts, with upside from sustainability improvements and higher occupancy over time.

- *Developments (Greenfield projects)*: Funding the design and construction of new green data centers. These projects focus on best-in-class sustainability from inception – for example, designing for **low PUE** targets (close to 1.2 or better), on-site solar or wind generation, battery storage for backup, advanced cooling (liquid or ambient cooling) and site selection for climate resilience. Development investments carry construction risk but allow the fund to shape the asset to meet future demand for climate-aligned digital infrastructure.

- *Platform or Joint Ventures*: Partnering with specialized data centre operators or developers via joint ventures or platform investments. In this approach, the fund may invest in a data center operating company or form a strategic partnership to scale multiple projects. This provides access to operational expertise and potentially a pipeline of projects. Investors categorize data center investment routes broadly as **direct asset investment, development projects, or platform investments with operators**, each with a different risk/return profile[26].

The fund's strategy emphasizes **green criteria** in asset selection. Potential investments are screened for energy efficiency, ability to integrate renewable energy sources, location advantages (e.g. climates that reduce cooling needs or sites with access to clean power), and overall carbon footprint. For each prospective deal, the team conducts technical due diligence on power and cooling infrastructure, examines the roadmap for technology upgrades, and evaluates the tenant mix (such as hyperscale cloud providers vs. colocation clients) for stability and growth. The fund targets projects that not only meet financial thresholds (IRR, cash yield) but also align with recognized sustainability standards (e.g. eligible under EU Taxonomy or capable of achieving certifications like LEED/BREEAM for data centers). Investment memoranda explicitly

discuss how each opportunity meets the **ESG and technical criteria** set forth in this manual (see *Evaluation Criteria* below).

Investment Committees and Decision-Making: All investment decisions pass through a formal review process. Internally, the **Investment Committee (IC)** of the fund manager reviews each proposed transaction. The IC is composed of senior executives (e.g. Chief Investment Officer, portfolio managers) and may include the risk manager or an independent member for challenge. The IC examines the deal's merits, risks, alignment with the fund's mandate, and ESG impact. A majority (or unanimous, as per IC charter) approval is required to proceed with an investment. Decisions are documented with rationales and any conditions (such as requiring specific risk mitigations or post-investment action plans).

In addition to the internal IC, the fund's governance may involve **external advisory input** on investments. The Limited Partner Advisory Committee (Advisory Board) does **not typically approve individual deals** (that remains the manager's fiduciary role), but it may be consulted for significant matters, such as: approval of any **conflict of interest transactions** (e.g. if the fund co-invests with an affiliate fund, the terms would be presented to the LP Advisory Board for clearance)[27]. If the fund's mandate is broad, the Advisory Board might also opine on any proposed changes to investment strategy or extensions of the fund's term. Some funds establish a **Technical Advisory Panel** – a group of external industry experts in data center engineering, renewable energy, and technology – to review and advise (in a non-binding capacity) on technical aspects of major projects. For example, before investing in a novel energy storage integration for a data centre, the manager could seek the panel's input on feasibility and future-proofing. Any such external committees operate under clear terms of reference and confidentiality. Ultimately, the **final investment decision authority rests with the fund manager's IC and Board**, ensuring compliance with the fund's documented strategy and fiduciary duty to investors.

Technical Assistance and Instruments: Given the innovative nature of green data infrastructure, the fund may utilize **Technical Assistance (TA) facilities** and financial instruments to enhance investment outcomes. If available, the fund can leverage a grant-funded **Technical Assistance Facility** to support portfolio projects. For instance, a TA facility (possibly funded by a development bank or climate finance initiative) could provide grants or expertise for energy audits, feasibility studies for on-site renewables, or training local operators in best practices. This kind of facility exists in some blended finance structures – e.g. the Subnational Climate Fund features a dedicated $28M TA facility to help stakeholders strengthen projects and ensure environmental goals are met[28]. Our fund will similarly seek partnerships with technical assistance programs to de-risk projects and amplify impact. Procedures are in place to request TA support for qualifying projects (e.g. a proposal to improve a data center's waste-heat reuse might get a TA grant for engineering studies). The investment team coordinates with TA providers but maintains independence in investment decisions.

Additionally, the fund employs **third-party financial instruments** for risk management and efficiency. Chief among these is **hedging**: where investments or revenues are denominated in foreign currencies, the fund will mitigate FX risk by using currency

hedges (such as forward contracts or swaps)[29]. For example, if the fund invests in a data centre in a country with local-currency revenue but our reporting currency is USD/EUR, we may hedge a portion of expected cash flows to protect against currency volatility. The fund may also hedge interest rate risk on any project financing debt to lock in favorable rates. All derivatives use is governed by the fund's risk management policy – hedging is only for risk mitigation, not speculation, and counterparties are subject to credit quality standards.

Other instruments include **insurance products** and **guarantees**. The fund ensures each data center asset carries appropriate insurance (property, liability, business interruption). We may also explore specialty insurance like coverage for **energy supply interruptions** or performance guarantees for renewable energy systems. In some cases, if investing in emerging markets, we might utilize political risk insurance or partner with multilateral institutions to obtain partial credit guarantees for offtake agreements. These third-party instruments help **de-risk the investments** and protect investor capital.

Investment Evaluation Criteria: For every potential investment, the portfolio team evaluates it against a set of **Green Data Centre Criteria** to ensure alignment with the fund's objectives:

- **Energy Efficiency:** A key metric is **Power Usage Effectiveness (PUE)** – the ratio of total facility energy to IT equipment energy. We prioritize data centers with low PUE (indicating efficient use of power) or those with clear plans to achieve best-in-class PUE post-investment. For context, PUE is widely used to track data centre sustainability performance[30]. Our diligence looks at cooling technology, equipment layout, and energy management systems. Targets are set to improve PUE over the holding period (e.g. through upgrades like hot-aisle/cold-aisle containment, liquid cooling, etc.). We also consider **cooling efficiency** metrics and any waste-heat recovery capabilities.

- **Renewable Energy Integration:** The share of power sourced from renewable energy is critical[31]. Investments should have a high **renewable energy mix** or the ability to transition to renewables (through on-site generation or power purchase agreements). For example, an ideal target might already run on 100% renewable electricity (solar, wind, hydro) or have long-term PPAs in place. If not, part of our post-investment plan would be to facilitate a shift to renewables. We measure the **percentage of energy from renewable sources** for each asset[32] and set minimum thresholds (e.g. any new development must aim for at least 50% renewable power from day one, moving to 100% over time).

- **Location and Resilience: Location resilience** refers to both climate and operational resilience of the data center's site. We assess climate risk factors (using tools like Climate Risk Vulnerability Assessments) – whether the location is exposed to flooding, extreme heat, wildfires, or other climate impacts[33]. Data centers must have mitigation measures (flood defenses, redundant cooling for heat waves, etc.) if located in risk-prone areas. We also evaluate the site's access to reliable power and connectivity. A "resilient" location might be one with

multiple grid feeds, proximity to renewable energy plants, and political/regulatory stability. In line with EU Taxonomy guidance, we perform climate risk assessments for each data center and require adaptation measures for identified risks[33]. We also prefer locations where **waste heat can be reused** (e.g. near communities that can use excess heat, aligning with emerging regulations)[34].

- **Carbon Performance:** We track the **carbon footprint** of each investment. This includes both **operational carbon** (ongoing emissions from electricity use – which we aim to minimize via efficiency and renewables) and **embodied carbon** (emissions from construction and hardware). A key metric is **Carbon Usage Effectiveness (CUE)** – CO_2 emissions per unit of IT energy, which we seek to keep low by using clean power[35]. We also calculate total emissions impact and look for projects with a path to net-zero operations. The fund may set targets such as achieving carbon-neutral (through reductions and high-quality offsets if needed) for each asset within a certain timeframe. In alignment with the EU Taxonomy, we measure **Global Warming Potential (GWP)** of operations (covering energy use and refrigerants) to guide reduction strategies[36][37]. Investments must either already meet, or be capable of meeting with our involvement, the technical screening criteria for substantial contribution to climate change mitigation (e.g. thresholds on power usage efficiency and renewable usage as defined by regulators).

- **Other ESG Factors:** We also consider **water usage efficiency** (WUE) – given that many data centers consume significant water for cooling, we favor designs that minimize water use or use recycling[38]. We evaluate the **potential for green building certifications** (LEED, BREEAM) as a sign of overall sustainability best practices. Furthermore, we look at the tenant **profile** from an ESG perspective (e.g. avoiding supporting enterprises involved in unsustainable activities, if relevant to our ESG commitments). The data center's **governance and community impact** are reviewed – including whether it provides local economic benefits, and if it's built with consideration for environmental impact (land use, biodiversity, etc.). These qualitative factors align with our broader ESG policy.

Each investment memo must explicitly address these evaluation criteria. A scoring or checklist system is used internally to ensure consistency. For instance, a proposed project might be rated on a scale for energy efficiency and given a pass/fail on meeting minimum renewable energy percentage. Investments not meeting the baseline green criteria are generally avoided unless a very clear plan exists to transform the asset post-acquisition (and such a plan would be approved by the IC and monitored). This disciplined approach ensures the portfolio genuinely advances sustainable digital infrastructure.

Risk Management

Key Risk Categories (Green Data Centre Focus): The fund's risk management framework identifies and mitigates various risks inherent in green data centre investments. Specific risk categories include:

- **Technological Obsolescence Risk:** Data centre technology evolves rapidly. Servers, cooling systems, and power equipment can become outdated, impacting efficiency and competitiveness. A major risk is that a facility's **digital infrastructure (which constitutes ~30–50% of total capex) could become technologically obsolete faster than expected**[39]. For example, older facilities might not support ultra-dense compute hardware or new cooling techniques needed for next-generation AI workloads. The fund mitigates this by thorough technical due diligence and requiring **capital expenditure (CapEx) reserves** for periodic upgrades. Each business plan includes an allowance for tech refresh (upgrading HVAC, electrical, monitoring systems) to maintain best-in-class efficiency. We also invest alongside experienced operators who stay current with industry innovation. The risk team will continuously monitor technology trends (e.g. advances in immersion cooling, new battery storage options) and assess portfolio exposure to tech obsolescence. If a material obsolescence risk is identified for an asset (say, its design cannot accommodate necessary retrofits), that risk is highlighted and may influence the exit strategy or insurance if available.

- **Energy Supply and Cost Risk:** Reliable power is the lifeblood of data centres. If a data centre cannot secure continuous, affordable electricity (especially from renewable sources), both operations and economics suffer. This risk has two facets: **energy reliability** (risk of outages or curtailment) and **energy price volatility**. Data centres require **24/7 continuous, reliable, cost-efficient power supply**[40]. We address reliability by favoring locations with strong grid infrastructure and backup power arrangements (generators, batteries) and by assessing utility contracts. For price risk, if the facility buys power from the grid, future electricity price increases (or carbon taxes on power) could erode margins. The fund mitigates cost risk by locking in long-term renewable energy contracts (PPAs) when possible, and by using energy-efficient designs to reduce consumption. Some projects might also include on-site generation (solar panels, etc.) to provide a portion of power at a stable cost. We stress-test each investment's financial model for power cost scenarios. In extreme cases, we may use financial hedges on energy prices or **embed price indexation in tenant contracts** (many data centre leases pass energy costs to tenants or have escalation clauses). **Environmental regulations** can also impact energy (e.g. mandates to use waste heat or limits on diesel generator runtime); our risk process tracks such regulatory trends in each jurisdiction.

- **Regulatory and Policy Risk:** Investments are subject to changing laws, especially in environmental and digital sectors. Key concerns include: data protection laws affecting data centre demand, zoning or permitting changes (e.g.

some locales may limit new data centre construction due to power strain), and critically, **sustainability regulations**. For instance, the EU's Energy Efficiency Directive now requires data centres to **report energy and water usage and may impose reuse of waste heat for larger facilities[34]**. Future regulations could set minimum efficiency standards or carbon emission limits. The fund mitigates regulatory risk by proactive compliance and design – we align with emerging standards (like the EU Code of Conduct for Data Centres) preemptively. We also diversify geographically to avoid overexposure to any one regulatory regime. Our governance includes monitoring and engaging in industry consultations on new rules. Should a major regulatory change occur (e.g. a new tax on data centre energy use), the risk team assesses impact on the portfolio and the fund adjusts strategy accordingly (for example, accelerating investments in self-generation or energy storage to reduce grid dependence). We also maintain open communication with local authorities during project development to ensure permits and community requirements are met, thus reducing the risk of regulatory delays or disputes.

- **Counterparty and Credit Risk:** Data centre investments involve various counterparties – construction contractors, equipment suppliers, power suppliers, and importantly **tenants/offtakers** who lease data hall space or capacity. There is risk that a counterparty fails to perform or fulfill obligations. **Tenant credit risk** is significant: if a major tenant (e.g. a cloud provider or enterprise) defaults or terminates, revenue drops and re-leasing can be difficult. Lenders and investors pay close attention to **tenant creditworthiness and concentration**, as highly bespoke data centers often have few tenants and a default can severely impact cash flow[41]. We mitigate this by conducting credit due diligence on all large tenants (reviewing their financials, business outlook) and diversifying tenant mix when possible. Lease agreements are structured with security deposits or parent guarantees for additional protection. **Occupancy risk** (failure to lease up capacity) is addressed by partnering with strong sales/marketing teams and sometimes pre-leasing a portion of capacity before development. For construction-phase investments, **contractor risk** is managed through EPC contracts with reputable firms, performance bonds, and step-in rights if a contractor fails. We also evaluate the supply chain for critical equipment – relying on multiple suppliers or holding spares to avoid prolonged outages if a vendor fails. All counterparty exposures are monitored: the risk manager tracks tenant concentration metrics and reports if any tenant exceeds set thresholds of revenue reliance. **Mitigation strategies** like obtaining business interruption insurance (covering certain losses if a tenant fails to deliver payments) or letters of credit from tenants are employed for additional security.

- **Liquidity and Exit Risk:** Green data centre assets are relatively illiquid – they are specialized facilities, and potential buyers (such as REITs, infrastructure funds, tech companies) are limited. **Exit risk** refers to the possibility that the fund cannot sell or refinance an asset at the projected value or within the planned timeframe. Data centers can be "bespoke" to specific user needs (unique designs, proprietary technology), which may complicate resale[42]. We mitigate

exit risk by investing in assets with broad appeal (standardized designs, in major connectivity hubs) and by maintaining flexibility (e.g. designing facilities that can be multi-tenant or easily upgraded for new users). The fund also staggers investment maturities to avoid a situation where all assets need to be sold at once. We plan exits conservatively, often lining up potential buyers through our industry network well ahead of time. If market conditions are unfavorable at a fund's end, we may consider extensions (with requisite investor approvals) to allow a better exit window, rather than rushing a sale at a discount. Additionally, **liquidity management** at the fund level involves careful planning of cash flows: since our fund is closed-ended with capital calls, we ensure that any distribution obligations or GP commitments are matched by either operational cash flow or credit facilities (like a subscription line) to bridge timing gaps. We also manage **repayment risk** for any fund-level debt – ensuring any borrowing (temporary or long-term) is well within asset coverage and can be repaid from capital calls or asset sales under reasonable assumptions.

- **Operational Performance and SLA Risk:** Data centre operations are typically governed by **Service Level Agreements (SLAs)** with tenants, committing to uptime and performance standards (e.g. 99.99% uptime). Failure to meet SLAs can result in financial penalties or client churn, directly affecting investment returns. **Operational risk** includes outages, equipment failures, cyber-security breaches, or inefficient facility management leading to higher costs. The fund mitigates these through robust operator selection and oversight. We often invest alongside experienced data center operators (or hire professional operators for owned sites) with a proven track record. All facilities must have redundant systems (N+1 or greater resiliency) to meet SLAs. We include **operations and maintenance (O&M) covenants** in JV agreements or management contracts – requiring preventative maintenance schedules, regular testing of backup systems, and reporting of any incidents. The risk team receives **operational reports** for each asset (uptime statistics, PUE readings, incidents log) on a continuous basis. We integrate these into our risk monitoring system. If an asset's operational performance deviates (e.g. PUE worsens or a near-miss outage occurred), we investigate and implement corrective action with the operator. In addition, we pay attention to **health and safety** at sites, ensuring compliance with regulations to avoid accidents that could disrupt operations. Continuous monitoring of SLAs is thus part of risk management's mandate, and material issues are escalated to the Board promptly.

The risk management function is independent and reports regularly to the Board on all these risks. We use risk registers and heat maps to track risk levels and mitigation status. Key risk indicators (KRIs) – such as tenant concentration %, average remaining power contract length, PUE trend, etc. – are reported quarterly. The fund also adheres to AIFMD-driven risk limits if applicable (e.g. maximum leverage, liquidity stress tests)[20]. There is a dedicated **Risk Officer** who can access all information and has authority to challenge investment decisions if risk limits or policies would be breached[43].

For quick reference, the table below summarizes major risk categories and examples of mitigations:

Risk Category	Description	Mitigation Strategies
Technological Obsolescence	Data center IT or infrastructure becoming outdated, reducing efficiency or tenant appeal. High uncertainty in tech lifecycle[39].	– Thorough technical due diligence and future-proofing designs. – Reserve budgets for upgrades; periodic tech refresh cycles. – Consult industry experts on emerging tech; adaptable facility designs.
Energy Supply & Cost	Inability to secure 24/7 reliable power or exposure to rising electricity prices/carbon costs. Data centers are energy-intensive[40].	– Locations with robust power infrastructure & redundant grid connections. – Long-term renewable energy PPAs to lock stable prices. – On-site generation (solar, storage) and backup systems. – Model worst-case energy price scenarios; pass-through costs in leases where possible.
Regulatory Changes	New laws/regulations on energy efficiency, reporting, environmental impact (e.g. mandatory heat reuse, stricter efficiency targets)[34][44].	– Proactive compliance: align investments with EU Taxonomy and codes of conduct from the start[45]. – Monitor policy developments in each region; engage in industry advocacy. – Diversify across jurisdictions to avoid single regulatory exposure. – Design assets to exceed current standards, providing buffer for future rules.
Counterparty (Tenant/ Partner)	Tenant default or loss (credit risk), or contractor failure impacting project. Bespoke facilities can be hard to re-lease[42][41].	– Vet tenant credit and diversify tenant base; obtain parent guarantees or security deposits. – Use tier-1 contractors with performance bonds; active project monitoring. – Structured leases with long terms and termination penalties; maintain some multi-tenant flexibility. – Insurance (e.g. rental loss insurance) where available.

Risk Category	Description	Mitigation Strategies
Liquidity & Exit	Difficulty selling asset at expected value due to niche design or market conditions; inability to return capital on time.	– Target versatile assets in prime locations; avoid over-customization beyond reuse. – Maintain alternate exit options (strategic buyers, IPO/REIT routes). – Stagger asset disposals; seek pre-sale agreements when possible. – Conservative leverage; fund-level contingency plans (extensions or secondary sales) for liquidity.
Operational/ SLA	Downtime or performance shortfalls breaching SLAs, causing penalties and reputation damage. Operational failures (cooling outage, security breach).	– Partner with experienced operators; enforce preventive maintenance and redundancy (N+1 or N+2) in all critical systems. – Continuous monitoring of uptime and PUE; real-time incident response plans. – Regular audits of facility operations; independent oversight of SLA compliance. – Cybersecurity protocols and physical security measures at all sites.

Every team member must promptly report any emerging risks or incidents (such as a significant outage or a tenant payment issue) to the risk management function. The fund's culture encourages open discussion of risks – **"no surprises"** – and the risk management policy is reviewed annually by the Board to incorporate any new risk factors (for example, if industry cyber threats increase, we might add new cyber risk mitigation measures accordingly).

Operations Management

Daily Operations and Administration: The fund's **Operations Team**, often in concert with the fund administrator, handles the day-to-day administrative running of the fund. This includes processing capital calls and distributions, managing cash flows, bookkeeping, and ensuring all financial transactions are properly recorded. The administrator provides daily NAV accounting (if needed for periodic valuation) and maintains the official investor register[46]. **Cash management** is a critical daily task – incoming capital contributions, outgoing investments, fees, and expenses are monitored to maintain adequate liquidity. Surplus cash awaiting deployment may be invested in safe, liquid instruments as per the treasury policy (e.g. short-term government securities) to earn interest while ensuring availability. The Operations Team also oversees **expense management**, making sure fund expenses (management fees, administration fees, legal bills, etc.) are paid timely and are within budget and approved limits.

Investor Communications and Reporting: Transparent reporting is a cornerstone of our operations. The fund issues **quarterly reports** to investors detailing portfolio updates, key metrics (financial performance and ESG metrics like data centre energy usage), and market commentary. These reports are prepared by the manager with input from the administrator for financial data and are reviewed by compliance before distribution. Financial statements are provided semi-annually or annually (with the annual financials audited). We also host **Annual General Meetings (AGM)** or investor meetings to present performance, often including a session on how the fund's investments are advancing sustainability objectives (for ESG-focused investors). Between formal reports, the investor relations team handles inquiries and provides any agreed custom reports (especially for investors with side letter rights to additional information). All communications strive to be clear, accurate, and comply with regulatory requirements (e.g. no selective disclosure of material information). If the fund is subject to specific reporting standards (such as **SFDR in the EU for sustainability**, or TCFD climate disclosures), the Operations team ensures those reports are prepared and disseminated appropriately.

Compliance Management: Day-to-day operations are carried out in adherence to compliance policies. The Compliance Officer (or team) monitors trading and investment activities for compliance with regulations (e.g. verifying that marketing efforts only target qualified investors, ensuring anti-money laundering checks are completed for all investors). They maintain insider trading and confidentiality protocols, especially important since data centre deals might involve handling sensitive information from tech clients. Compliance also ensures adherence to any investment restrictions in the LPA or side letters (for example, if a side letter forbids investing in certain jurisdictions or requires ESG constraints, those are checked before any deal). The fund maintains an updated **Compliance Manual** (covering personal trading, gifts/entertainment, anti-bribery, etc.) that all staff must follow. Regular training is provided to the team on these policies. The operations staff also keep up with regulatory filings – e.g., ensuring timely submission of periodic AIFMD reports, FATCA/CRS investor reporting for tax, or any central bank reporting for cross-border transfers. The administrator often assists by producing required data for these filings[47], but ultimate responsibility lies with the fund's compliance function.

Change Management Procedures: In a dynamic sector like data centers, the fund needs a structured process to manage changes in strategy or operations. **Change management** refers to how we handle significant alterations to the fund's mandate, investment plan, or operational setup, ensuring they are approved, communicated, and implemented smoothly.

Examples of changes include: shifting the investment focus (e.g. originally targeting **edge data centres** near population centers, but deciding to pursue **hyperscale data centres** that serve cloud giants), or expanding into new geographies outside the initial scope. Another example could be introducing a new investment structure (such as moving from pure equity investments to also providing mezzanine debt financing to projects), or changes like extending the fund's life, or altering the fee structure for a continuation vehicle.

Any **material change to the fund's strategy or operations** triggers a formal review. The process is as follows:

1. **Proposal and Analysis:** The investment team or management drafts a Change Proposal outlining the rationale, benefits, and risks of the change. For instance, if shifting from edge to hyperscale data centres, the proposal would detail why (market demand, better returns), what the new risk profile is (larger projects, higher capex, possibly fewer but bigger tenants), and how it still aligns with the fund's objectives (still green-focused, but on a larger scale). The proposal includes an analysis by the risk manager of potential new risks or increased exposures, and by compliance if any mandate or documentation constraints exist.

2. **Governance Approval:** The proposal is submitted to the fund's governance bodies. Generally, the first review is by the internal Investment Committee or management committee. Significant changes are then taken to the **Board of Directors** for approval, and often also presented to the **Advisory Board (LPAC)** for input or consent. For example, a geographic expansion beyond what the PPM described might require Advisory Board sign-off or even a supermajority consent of investors, depending on LPA provisions. The governance process ensures that changes are in the best interest of the fund and within the boundaries of fund documentation. The **Advisory Board's role is crucial for investor-related changes** – e.g., if changing strategy could conflict with what investors were originally sold, the LPAC will consider whether it constitutes a "material change" requiring investor approval[48]. We adhere strictly to any required consent thresholds (as specified in LPA or side letters) before implementing changes.

3. **Documentation and Disclosure:** Once approved internally, any change is documented. Minor changes (operational improvements, such as adopting a new reporting software) may only need internal documentation and notification in the next quarterly report. Major changes (strategy shift, mandate expansion) likely require an **amendment to the PPM or LPA**. Our legal counsel prepares the necessary amendments or supplemental disclosures. Investors are provided with clear notice of the change. In many cases, we would issue a **side letter or consent letter** to all investors for signature if an LPA amendment is needed (or hold a formal investor vote, if required). For instance, introducing the ability to invest in a new country might be done via an LPA amendment that investors vote on (with the required majority). All regulatory bodies are informed as needed (e.g. if our AIFM license or fund registration needs updating due to the change).

4. **Implementation and Monitoring:** After approval and documentation, the operations team implements the change. This could involve operational shifts, such as onboarding new local advisors for a new region, updating risk management processes to account for new instruments (e.g. hedging policy if we start using more derivatives), or hiring additional staff with relevant expertise (like hyperscale facility engineering know-how if that's the new focus). We update our internal procedures and checklists to incorporate the change. The risk management team pays special attention during the transition – for example, if

we diversify to a new geography, for the first few deals they will do heightened reviews for political/currency risks until it becomes part of the standard process. Any **change in strategy or operations is included in subsequent investor reports**, describing what was done and how it impacts the fund's prospects.

Throughout this process, **investor communication is key**. We provide transparency to investors about why a change is being made. For instance, if moving into hyperscale data centers, we might explain that market data shows strong demand from cloud providers, and that this move could improve returns, while still aligning with our green investment criteria (perhaps even more so, as hyperscale centers can achieve greater efficiency at scale). We would also reassure how risks are managed in the new approach.

Change management governance also covers adjustments to **internal policies or new regulatory requirements**. If a new regulation requires the manager to have, say, an updated license or a new policy (e.g. EU Sustainable Finance Disclosure Regulation compliance), the Compliance Officer will bring this to the Board's attention and a plan will be made to adapt. For example, if the fund opts to register as an Article 9 (dark green) fund under SFDR, that is a considered change – requiring ensuring all investments meet stringent sustainability criteria and additional reporting – and would be governed by the steps above (proposal, Board approval, disclosures, etc.).

In summary, the fund does not undertake significant changes lightly. We balance flexibility to seize opportunities (e.g. a new market opening for green data centres) with fidelity to our investors' expectations and regulatory commitments. Proper change management ensures the fund remains adaptive **yet accountable**, with robust oversight every step of the way.

Investor Structuring

Capital Commitments and Fund Closings: The fund operates on a **capital commitment** model. Investors (Limited Partners) commit a fixed amount of capital to the fund during the fundraising period. The fund conducts an **Initial Closing** once a minimum aggregate commitment is reached, allowing the fund to begin operations and investments. At Initial Closing, admitted investors are legally bound by the LPA and their subscription agreements; their commitments become effective and the fund can draw capital as needed. Following the initial close, the fund may have subsequent closings (e.g. a **Final Closing** by a target date) to admit additional investors up to a hard cap. Investors coming in at later closings typically contribute an interest factor or equalization payment to put them on par with earlier investors (compensating for the time value of capital already called). The **Initial Closing Date** and **Final Closing Date** are defined in the LPA. No new investors are admitted beyond the final closing unless extraordinary circumstances and with proper consents.

Capital calls (drawdowns) are issued to investors pro rata to their commitments when investment opportunities arise or to pay expenses. The fund strives to provide notice as specified (often 10 business days) for each call. All investors share in each drawdown and ensuing investments pro rata, ensuring equitable treatment. If an investor defaults

on a capital call, the LPA's default provisions apply (e.g. interest penalty, potential forfeiture of partnership interest after grace period) to protect the fund's operations. The **commitment period** (investment period) during which new investments can be made usually lasts a set number of years from initial close; after that, follow-on investments or expenses can still be called, but no new primary investments without investor approval.

The fund may issue interests to investors in different legal forms depending on the structure. In a traditional partnership, investors hold **partnership interests** (often not certificated, but recorded on the books). If the fund is a corporate or unit trust structure, investors might be issued **shares or units** representing their stake. Some funds use a note or debt instrument structure for certain tranches of capital – for example, issuing **participating notes** or bonds to investors instead of equity interests, which can be the case in certain jurisdictions or for specific tax planning. This fund is flexible to investor needs: it can accommodate investments via equity or debt-like instruments if aligned with regulatory requirements. Any such **issuance of shares or notes** is done under the offering documentation and subject to the fund's governance (e.g. all investors in a class have equal rights). For instance, a fund might have a class of voting shares for equity investors and a class of non-voting notes for an investor that for regulatory reasons prefers a fixed-income-like participation. We ensure that regardless of form (share or note), investors receive equivalent economic exposure and information. All issued interests are properly documented, and the administrator keeps the register of shares/notes outstanding.

Subscription Agreements and Side Letters Alignment: As detailed earlier, each investor signs a **Subscription Agreement** binding it to the fund's terms. It is imperative that the commitments and representations in those agreements remain aligned with how the fund is operated. The Ops team, with legal oversight, cross-checks that any conditions an investor placed in a subscription (e.g. a requirement for side letter terms, or a representation that the fund meets certain ESG criteria) are fulfilled. We treat all investors fairly in accordance with **most-favored nation (MFN)** provisions. If a side letter grants a particular investor a better fee or right, we may be obligated to offer similar terms to other investors of the same class if they invoke MFN, to the extent applicable. Our compliance team maintains a matrix of side letter provisions to ensure we honor all special arrangements. For example, if Investor A's side letter says they must not be invested in any data centre that uses coal-based power beyond X%, the team will ensure this constraint is respected in portfolio construction or notify the investor if an exception is considered (and likely avoid such an investment altogether to respect the commitment).

The **use of side letters** is managed carefully: we do not allow side letters to override fundamental fund terms that could harm other investors (which could create legal issues). Most side letters explicitly state that in case of conflict with the LPA, the Advisory Board or all-investor consent might be needed, or the side letter term is limited so as not to adversely affect others[49]. We aim for transparency by disclosing to the Advisory Board (and investors, where permissible) the existence of side letters and significant categories of rights granted (often funds will offer an MFN process post-final closing where investors can see a list of side letter provisions in anonymized form). Internally, we align all fund operations (capital calls, distributions, reporting) with both

the LPA and any nuanced side letter obligations. For instance, if a side letter requires that an investor gets 30 days notice for capital calls (vs 10 days for others), our call notices to that investor will be tailored accordingly.

In summary, **subscription agreements** lock in uniform obligations and **side letters** provide tailored but controlled exceptions. We enforce a policy that any team member dealing with investor requests consult the official record of side letter terms before committing to any course of action, to ensure no breach of agreements.

Investor Categories and Tailored Provisions: The fund primarily targets **professional investors and institutional investors**. These include entities like pension funds, insurance companies, endowments, foundations, sovereign wealth funds, development finance institutions (DFIs), and high-net-worth or family office investors that meet professional investor criteria. By limiting to such investors, we ensure that participants are experienced and meet regulatory suitability standards for alternative investments.

We recognize that different categories of investors may have specific needs:

- **Professional Investors:** In many jurisdictions (such as the EU), a "professional investor" has a defined regulatory meaning (e.g. MiFID professional clients). We ensure that all our marketing and documentation meet the standards for professional investors (clear risk disclosures, no public advertising beyond allowed scope). We do not accept retail investors unless we were to create a specific feeder or structure that is compliant with retail fund regulations, which is not currently in scope. Professional investors often require less regulatory reporting than retail, but we still maintain high transparency as a best practice.

- **Institutional Investors:** Large institutions may have internal mandates or constraints. For example, an insurance company investor might need certain provisions to comply with Solvency II (like reporting on look-through of assets), or a bank under Basel rules might seek particular legal language on indemnities. We accommodate these through side letters or share classes as needed. Institutional investors also often negotiate fee breaks based on commitment size – our policy is to do so in a way that respects **fee parity within tiers** and discloses it (i.e. usually via an LPA schedule of management fee breakpoints or via side letters with MFN). We also handle tax documentation (such as providing required tax reporting or structuring the fund or parallel vehicles to suit institutional tax-exempt or tax-efficient needs).

- **ESG-Focused Investors:** A growing subset of our LPs are those with explicit ESG or impact mandates (including some DFIs, impact funds, or sustainability-focused family offices). These investors often perform **enhanced due diligence** on the fund's ESG processes and may request bespoke reporting to measure impact. We are prepared to provide **ESG reports** – e.g. annual statistics on portfolio PUE improvements, carbon emission reductions, renewable energy usage percentage, and alignment with frameworks like the UN Sustainable Development Goals or climate targets. Some ESG investors might

condition their commitment on the fund maintaining a certain level of sustainability performance (for instance, only investing if the fund commits to taxonomy alignment for a majority of investments, or if the fund will report under an impact measurement standard). We honor such commitments through side letters and integrate them into our operations. For example, if an investor's side letter requires an **impact report certified by a third party**, we will engage an appropriate auditor or consultant to produce that annually. We also invite ESG-focused investors to join any sustainability advisory discussions if we have them, leveraging their insight.

- **Public/Government Investors:** If any government entities or sovereign wealth funds invest, they may have additional requirements around transparency (subject to FOIA requests or public disclosure). We manage confidential information carefully but cooperate with any legitimate disclosure requirements these investors have, within the boundaries of confidentiality agreements.
- **Other Categories:** Should the fund accept any **quasi-retail (e.g. high-net-worth individuals via feeder)** or **certain regional investors** (who might invest through feeder funds for regulatory reasons), we will ensure those feeders or special vehicles are structured to comply with local laws. For instance, if we had a feeder for U.S. taxable individuals, it might be structured as an entity blocking certain types of income, and we'd provide necessary K-1 tax forms. Currently, the focus remains on institutional capital, so these structures are minimal.

Our approach is to **align investor structuring with fairness and regulatory compliance**. The LPA and side letters collectively ensure that no investor category can unduly harm the interests of others. For example, if an ESG investor requires that the fund not invest in a certain type of project (say, one that doesn't meet a green standard), we'd likely incorporate that as a fund-wide rule rather than run two strategies, to keep the portfolio consistent. If that's not feasible, we would segregate assets or create parallel vehicles rather than compromise (but such complexity is avoided if possible).

Finally, the fund **onboarding process** for all investors includes confirming their category and ensuring they receive the correct documentation. Professional and institutional investors receive the full private placement memorandum and must certify their status. We keep detailed records fulfilling any **know-your-client (KYC)** and anti-money laundering requirements for each investor type (institutions provide incorporation docs and ownership info, individuals provide identification, etc.). The fund administrator typically assists in this KYC onboarding. Only upon satisfactory completion can an investor be admitted (ensuring regulatory and sanctions compliance).

In summary, we treat all investors equitably, while providing necessary accommodations via structuring and side letters to meet specific needs of professional, institutional, and ESG-driven investors. The overarching principle is that the fund's **terms and operations remain consistent and transparent** to all parties.

Policy & Governance

ESG Policy (Environmental, Social, Governance): As a fund devoted to green infrastructure, we maintain a robust **ESG Policy** guiding both investment decisions and internal conduct. This policy commits the manager to integrate environmental, social, and governance considerations at every stage of the investment process. Key elements include:

- *Environmental:* We proactively seek investments that contribute to environmental sustainability (energy efficiency, carbon reduction). We perform environmental due diligence for each project (e.g. energy source analysis, carbon footprint estimation) and avoid projects that would significantly harm the environment. The fund is aligned with the **EU Sustainable Finance Taxonomy** for climate change mitigation – meaning we endeavor to invest in data centre activities that meet the technical screening criteria (e.g. adhere to the EU Code of Conduct for Data Centres, conduct Climate Risk Assessments, and implement water and circular economy measures)[50][36]. We target a high percentage of **taxonomy-aligned investments** and will report this metric to investors annually. The ESG policy also mandates ongoing monitoring of environmental performance (tracking KPIs such as PUE, renewable energy % – as required under new regulations like the EED[44]) and continuous improvement plans for each asset.

- *Social:* While the fund's focus is primarily environmental, we also consider social impacts. This includes ensuring our data centre investments uphold safe labor practices, have a positive local community relationship, and possibly support digital inclusion (e.g. in developing regions, improved data infrastructure can have social benefits). We avoid any investments that could involve human rights violations or poor working conditions. In our role as owners/investors, we encourage portfolio companies or operators to implement strong health and safety standards for workers and contractors. We also consider data privacy and cybersecurity – indirectly social concerns – by investing in facilities that are secure and reliable, thus protecting the end-users of digital services.

- *Governance:* Good governance is enforced both within our fund management and in the companies/projects we invest in. Internally, governance policies (Board oversight, compliance checks, risk management independence) are as described in this manual. For our investments, we often obtain governance rights such as board seats or observer rights in joint ventures, which we use to promote ethical conduct and sound decision-making. We expect high standards of corporate governance from any operating partners – including transparency, accountability, and anti-corruption measures. The fund's ESG policy explicitly includes anti-corruption and sanctions compliance checks before any investment (especially relevant if investing in emerging markets or through local partners).

We also are a signatory to the **UN Principles for Responsible Investment (PRI)** and produce an annual PRI report on our ESG activities (if applicable). Our ESG Policy is reviewed and updated annually to reflect evolving best practices or investor expectations. We commit to training our staff on ESG matters, ensuring the investment

team has the expertise to evaluate environmental technologies and metrics. The policy is client-facing as well – we may provide it to investors who require evidence of our ESG integration.

Diversity, Equity, and Inclusion (DEI): The fund manager maintains an internal **DEI Policy** reflecting our commitment to a diverse and inclusive workplace and investment approach. Internally, this means we strive to recruit, retain, and promote a team with diverse backgrounds (including but not limited to gender, ethnicity, and experience). We believe, as research and our own experience suggests, that diverse teams lead to better decision-making and innovation[51]. Concretely, our hiring and HR practices ensure equal opportunity and prohibit discrimination or harassment. We provide training on unconscious bias to all team members and have established procedures to address any DEI-related concerns or incidents. The DEI Policy sets measurable goals (for example, aiming for a certain percentage of investment team members from underrepresented groups, or ensuring interview panels are diverse) and tracks progress annually.

From an investment perspective, while we invest in infrastructure, we also consider DEI factors in our portfolio. We **encourage portfolio companies** (such as data center operating companies we partner with) to adopt similar inclusive practices. For instance, if we have influence, we may encourage a portfolio company to implement a DEI policy or to report on workforce diversity. In venture or growth equity contexts, some funds track diversity of founders; analogously, in our context we might track diversity in project contractors or staff. We align with industry efforts (like ILPA's diversity initiative in private equity) to improve DEI in asset management.

The DEI Policy is championed by senior management, with a designated officer overseeing its implementation. We also include DEI in our **annual reports** where relevant, highlighting our firm's composition and any initiatives (e.g. internships or mentorship programs to support underrepresented talent in finance or technology). The policy is not just internal – it's part of our value proposition to ESG-conscious investors that our organization lives the values it promotes. We recognize that diverse perspectives help us better understand societal shifts and identify opportunities in the market, thereby benefiting our investors as well[51].

Conflict of Interest Policy: Managing conflicts of interest is critical in a fiduciary context. The fund's **Conflict of Interest Policy** lays out procedures to identify, disclose, and manage any conflicts between the fund manager, its affiliates, and the fund or among different investor classes. Typical conflicts might include: the manager running another fund with overlapping mandate, allocation of an investment opportunity between this fund and a parallel fund, situations where a deal involves an affiliate (e.g. co-investment by a GP vehicle), or personal conflicts where a team member has a stake in a counterparty.

Our policy first requires disclosure: any potential conflict must be reported to the Compliance Officer and logged. Then, we address it through either **preventative measures or obtaining approvals**. For instance, if an opportunity arises and the manager has two funds that could invest, we follow a pre-set **allocation policy** (often

pro-rata based on available capital or fit to strategy) to allocate fairly, documented in our compliance manual. If the fund ever transacts with an affiliate (say we buy a property from another fund managed by us), this would be treated as a conflict and referred to the **Advisory Board (LPAC)** for review and approval[27]. The LPAC's role in conflict resolution is explicitly mentioned in the LPA – e.g. the GP will not engage in certain transactions without LPAC consent to ensure terms are fair to the fund. By obtaining such approvals, and often getting an independent valuation or fairness opinion, we manage the conflict in the best interest of investors.

We also have personal trading and investment rules: team members cannot invest personally in fund portfolio companies without approval, and key persons are often required to commit capital to the fund itself to align interests (as per LPA terms). Any gifts or entertainment above nominal values from service providers or counterparties must be pre-cleared to avoid undue influence.

In summary, the policy ensures **transparency and fairness**. All material conflicts and their resolution (like LPAC approvals) are recorded in meeting minutes[1]. If a conflict cannot be adequately mitigated, the policy dictates that we **avoid** the situation altogether. For example, if an investment is presented where our GP's related party is on the other side and we can't structure it on arm's-length terms or get LP consent, we would decline the deal. The conflict policy is periodically audited by internal audit or outside counsel to ensure it remains effective and in line with regulatory expectations.

Taxonomy Alignment and Regulatory ESG Compliance: As mentioned, we strive to align with the **EU Taxonomy** for sustainable activities, given our green focus. This means the fund's investments in data centers aim to meet the criteria defined for climate change mitigation (currently, data centers can qualify if they meet certain efficient performance levels and climate risk management standards)[50]. We have embedded processes – such as performing the Climate Risk Vulnerability Assessments and ensuring adherence to the Code of Conduct for Energy Efficiency in data centres – which double as compliance with taxonomy criteria[33]. We track what percentage of our portfolio (by invested capital) is taxonomy-aligned and include that in investor reports. For any asset that is borderline, we may engage an external auditor or technical expert to verify alignment.

In addition, if the fund is marketed in Europe under **SFDR (Sustainable Finance Disclosure Regulation)**, we have classified it likely as an **Article 9 fund** (targeting sustainable investments) or Article 8 (promoting environmental characteristics), depending on exact strategy. That imposes certain disclosure requirements. Our Policy & Governance framework ensures we produce the periodic ESG reports required – e.g. an SFDR Annex report detailing how we met environmental objectives, the adverse sustainability impacts considered, etc. We also commit to **TCFD (Task Force on Climate-related Financial Disclosures)** recommendations over time, reporting climate-related risks and management in line with best practices.

Other Internal and Client-Facing Policies: We maintain a comprehensive set of policies to govern conduct:

- *Code of Ethics:* A document that outlines the ethical expectations from employees, including confidentiality, integrity, and compliance with laws. This is acknowledged by all staff.
- *Disclosure and Transparency Policy:* Ensures that all communications to investors (client-facing) are accurate and not misleading. For instance, any marketing materials about "green" claims are vetted so we don't engage in greenwashing – we only make claims we can substantiate, in compliance with regulations like EU's anti-greenwashing rules in financial products.
- *Side Letter Governance:* Internally we have a guideline on how side letters are negotiated and approved (typically by senior management and legal) to avoid inadvertent conflict or inconsistency with the fund terms[52]. As part of governance, we periodically summarize side letter obligations to the Advisory Board, as appropriate, to maintain trust.
- *Cybersecurity and Data Protection:* Although not explicitly requested, as a fund managing sensitive data (investor information and also potentially operational data from data centres), we have strong cybersecurity policies and align with regulations like GDPR for any personal data. This protects our investors and our operations.

All these policies are reviewed at least annually or when regulations change. For example, if a new regulation requires additional disclosures or restrictions (say a new **EU Green Taxonomy criterion for data centers in terms of minimum waste heat reuse**), we will update our ESG and investment policies accordingly.

Governance of Change and New Initiatives: As part of governance, any major new initiative – whether it's obtaining a new license, launching a new product, or serving a new client segment – is overseen by the Board and relevant committees:

- *New Licenses:* If the management company decides to obtain a **new license** (for example, registering as a broker-dealer, or getting a MiFID investment firm license to perform additional services, or expanding an AIFM license to a new jurisdiction), this is treated similarly to the change management process described earlier. A plan is prepared, the Board approves it, and resources are allocated. We assess the impact on the fund – new licenses often bring new compliance requirements, so we ensure those can be met. The Board will only green-light a license application if it aligns with the strategic direction and we have the infrastructure to comply with ongoing obligations. Once obtained, the compliance manual is updated for any new rules under that license.
- *New Instruments:* Should the fund consider using **new financial instruments** beyond the current scope (for instance, if we decide to engage in interest rate derivatives, or maybe consider tokenized securities issuance), such a decision goes through the **Risk Committee and Board**. The risk implications are studied

(e.g. counterparty risk from derivatives, valuation issues from novel instruments) and policies are updated to manage them. We might run a pilot or get expert consultation. Only after formal approval would portfolio management start using the new instrument, and operations would be trained for accounting and reporting of it.

- *Expanded Mandates or Strategies:* If the firm (fund manager) wants to launch a **new fund** with a different mandate (say a Green Data Centre Fund II or a related strategy like a telecom infrastructure fund), governance requires an analysis of capacity and conflict management. The Board ensures that either the team is expanded or there is sufficient separation so that the original fund's interests are not diluted or conflicted by the new mandate. Often a **Conflicts Committee** (could be part of the Advisory Board or a special committee) would review the plan for managing overlaps (e.g. allocation policies between Fund I and Fund II). Also, client-facing, we communicate clearly to existing investors if a new fund is launched, especially if it will invest in similar assets, to maintain trust and possibly offer co-investment opportunities.

- *New Investor Categories:* If we decide to accept a new category of investors (for example, semi-professional or retail via feeder, or investors from a new country requiring specific structuring), this falls under governance review. The Compliance Officer would present requirements (e.g. if taking any retail money, perhaps needing a prospectus or additional safeguards). The Board would determine if the benefits outweigh the complexity. If proceeding, we'd implement the needed structures (maybe a feeder fund with appropriate protections, additional disclosures written in plainer language, appointing a depositary if required by retail regulations, etc.).

All such changes are handled under a formal project with accountability. Importantly, **no material change is implemented without informing investors and obtaining approvals if required** by the fund documents or regulation. The Advisory Board is generally apprised of significant new initiatives even if formal consent isn't needed, as a matter of good governance and relationship management.

Finally, the **compliance and internal audit functions** check that after any change or new initiative, the firm continues to operate in accordance with all regulatory and policy requirements. For example, after adapting to a new license, an internal audit might review our first year of compliance with it to ensure nothing is amiss.

In conclusion, this Fund Management Policy Manual is intended to guide internal teams in operating the Green Data Centre Infrastructure Fund with clarity and rigor. By adhering to the structures, procedures, and policies detailed above, we ensure the fund is managed prudently, transparently, and in alignment with its sustainability mission and fiduciary responsibilities. Each team member has a responsibility to uphold these standards, and leadership (the Board and management) will continue to enforce and evolve these policies as needed to achieve success for our investors and positive impact through greener data infrastructure.

[1] [4] [27] Microsoft Word - 62984386_6.DOCX

https://www.morganlewis.com/-/media/files/special-topics/vcpefdeskbook/fundoperation/vcpefdeskbook_lpadvisorycommittees.pdf

[2] [3] [5] [19] [43] Alternative investments governance and risk

https://assets.kpmg.com/content/dam/kpmg/pdf/2016/01/fs-ai-governance-risk-management.pdf

[6] [7] [10] [14] [15] [16] [46] Put Simply Funds Roles and Responsibilities - VG

https://www.jerseyfinance.com/wp-content/uploads/2020/04/Put-Simply-Funds-Roles-and-Responsibilities.pdf

[8] [11] [12] [13] What does a custodian do for alternative investment managers? - Blue Vault

https://bluevaultpartners.com/what-does-a-custodian-do-for-alternative-investment-managers/

[9] [47] Alternative Fund Administration 101 - FundCount

https://fundcount.com/blog/alternative-fund-administration/

[17] [18] [20] Everything You Need to Know About AIFMs

https://www.ocorian.com/knowledge-hub/insights/everything-you-need-know-about-aifms

[21] Legal Forms of Alternative Investment Funds - GMM Fund Management

https://www.gmmfunds.com/2019/04/11/legal-forms-of-alternative-investment-funds/

[22] [23] [24] [52] Side letters: Pitfalls and perils for a financing

https://www.globallegalinsights.com/practice-areas/fund-finance-laws-and-regulations/side-letters-pitfalls-and-perils-for-a-financing/

[25] [26] Data Center Investment: Decoding Opportunities | CBRE Investment Management

https://www.cbreim.com/insights/articles/decoding-data-centers

[28] Home - SCF Subnational Climate Fund | Blended Climate Finance

https://www.subnational.finance/

[29] How can we mitigate foreign exchange risk for infrastructure investments?

https://www.gihub.org/articles/how-can-we-mitigate-foreign-exchange-risk-for-infrastructure-investments/

[30] [34] systemiq.earth

https://www.systemiq.earth/wp-content/uploads/2025/09/Investable-Green-Data-Centres-Whitepaper_Sept-2025.pdf

[31] [32] [33] [36] [37] [38] [44] [45] [50] Sustainable data centers: ESG, compliance, and futureproofing for success - GRESB

https://www.gresb.com/nl-en/sustainable-data-centers-esg-compliance-and-futureproofing-for-success/

[35] Carbon Usage Effectiveness in Data Centers Explained - Nlyte

https://www.nlyte.com/blog/understanding-and-calculating-carbon-usage-effectiveness-cue-in-data-centers/

[39] [40] [41] [42] bakerbotts.com

https://www.bakerbotts.com/~/media/files/thought-leadership/publications/2025/march/financing-the-future-trends-and-challenges-in-data-center-infrastructure-for-ai.pdf

[48] To what extent may limited partners or a Limited Partners Advisory ...

https://www.rpclegal.com/thinking/professional-and-financial-risks/to-what-extent-may-limited-partners-or-a-limited-partners-advisory-committee/

[49] Side letter terms - Alternative Investment Management Association

https://www.aima.org/article/side-letter-terms.html

[51] Diversity, Equity and Inclusion Policy – Future Energy Ventures

https://fev.vc/diversity-equity-and-inclusion-policy/