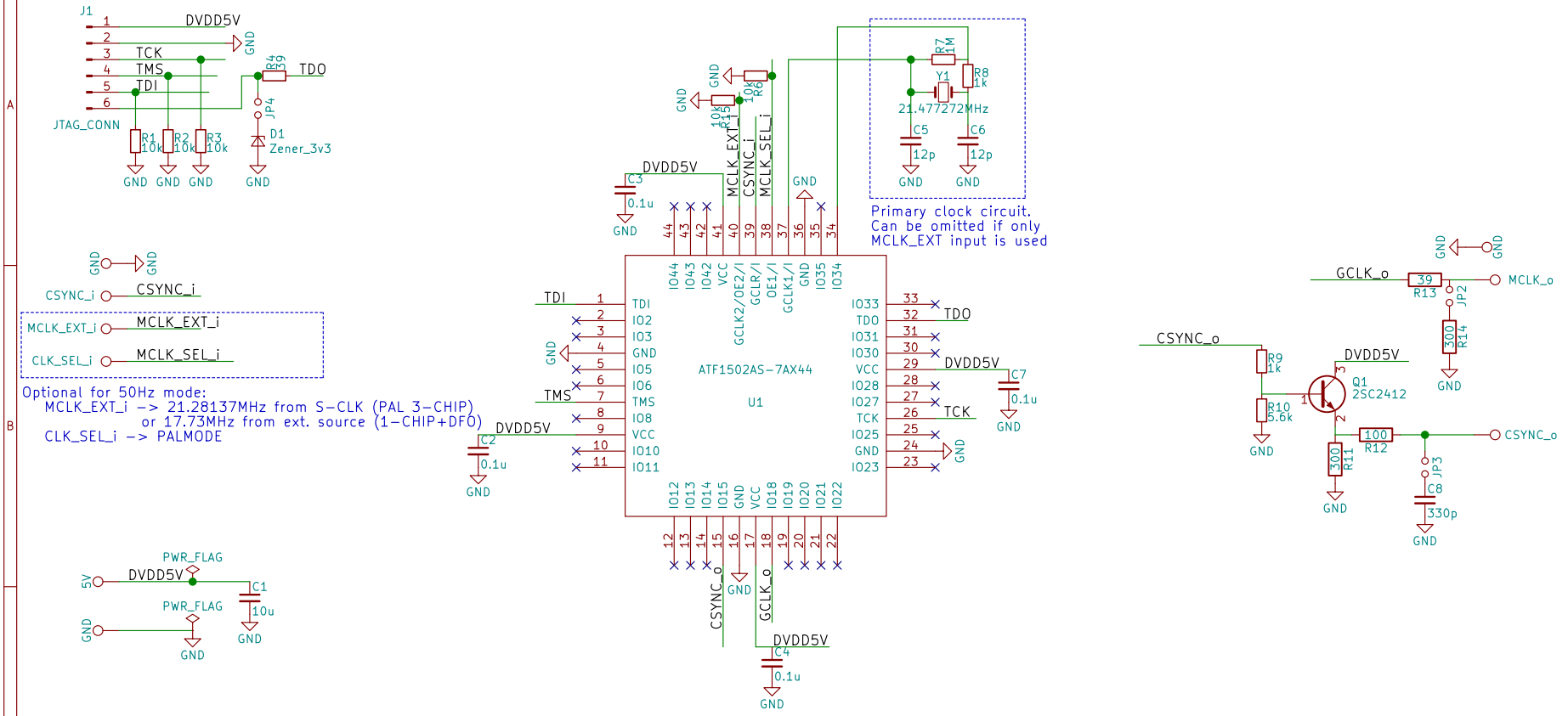

Sheet: /
File: snes_dejitter.sch

Title: snes_dejitter

Size: A4	Date: 2018-08-01	**Rev: 1.3**
KiCad E.D.A. kicad 5.0.0-rc2+dfsg1-3		Id: 1/1