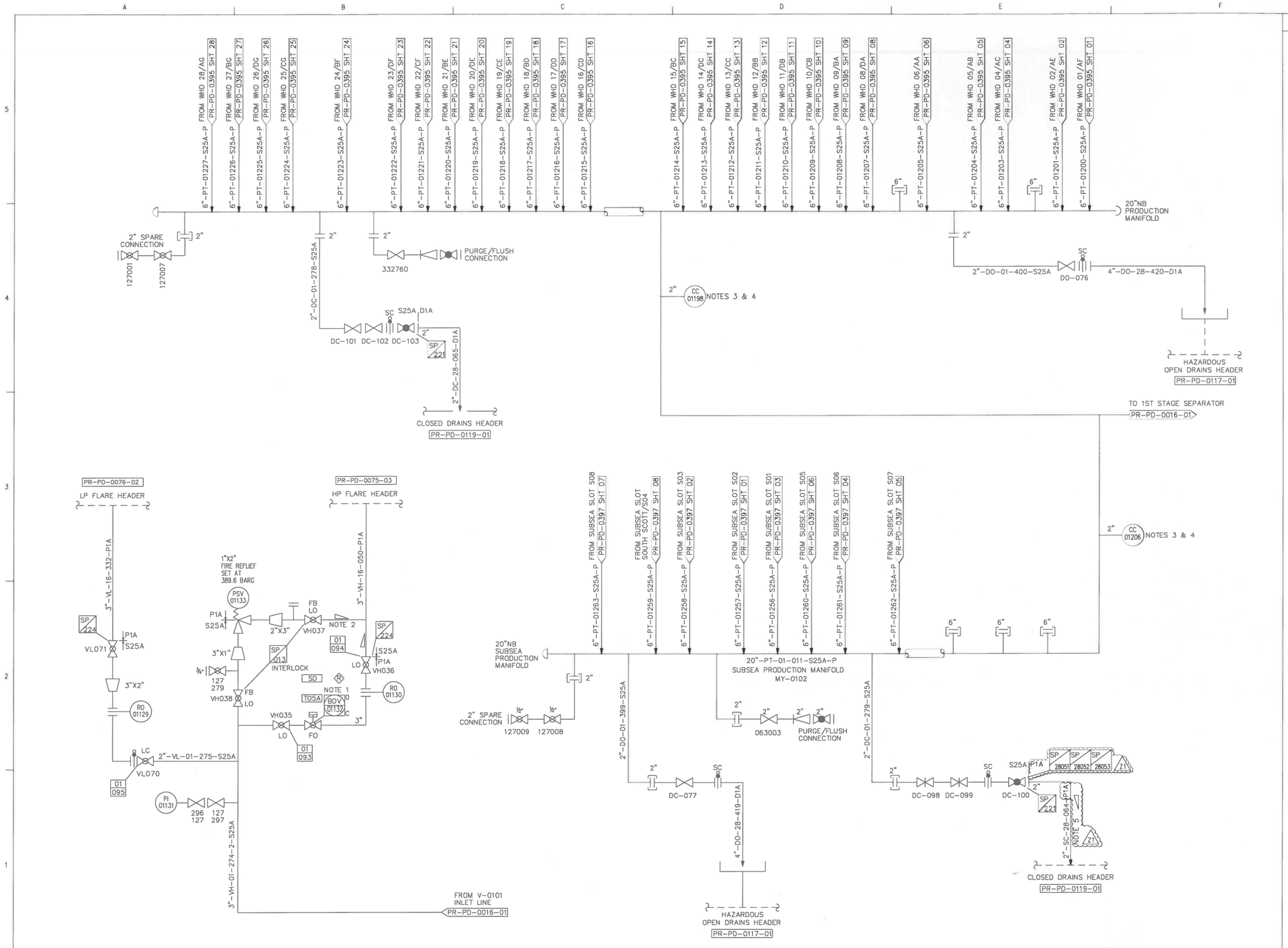

NOTES

1. A PROMPT IS REQUIRED IN THE DCS TO ALERT OPERATIONS IF BLOWDOWN VALVE BDV-01132 IS NOT CLOSED.
2. PSV INLET AND DISCHARGE PIPING IS NOT TO BE POCKETED. DISCHARGE PIPING TO SLOPE TO FLARE HEADER. MINIMUM SLOPE 50:1
3. CORROSION COUPONS ALL HAVE 2" ACCESS FITTINGS (FLAREWELL TYPE). CONNECTIONS TO BE SUPPLIED BY INSTRUMENTS.
4. ACCESS FITTING CONNECTION TO BE LOCATED AT THE BOTTOM OF THE PIPE AND THE COUPON TOP FLUSH WITH PIPE BOTTOM INNER WALL. ADEQUATE ACCESS SHALL BE PROVIDED TO RETRACT THE COUPON UNDER LINE PRESSURE.
5. FREE DRAINING WITH NO POCKETS AND A MINIMUM SLOPE OF 1:100. Z1

REFERENCE DRAWINGS

DRG.No.	REV	TITLE

REV	REASON FOR ISSUE	DATE	DRN.	CKD.	L.E.	P.E.	L.E.	P.E.
					APPROVAL		NEXEN APPROVAL	
Z1	AS-BUILT FOR SMOC1860	09-01-18	DD	LM	JL			
11	AS-BUILT UNDER SEQ1206	25-04-07	NS	MM	AL		GL	
10	AS-BUILT UNDER S1084	03-12-03	IAG	SH			AH	DB

REV	REASON FOR ISSUE	DATE	DRN.	CKD.	L.E.	P.E.	L.E.	P.E.
					APPROVAL		NEXEN APPROVAL	

nexen
Nexen Petroleum U.K. Limited
Nexen House,
Hareness Road,Altens,
Aberdeen,AB12 3LE
Tel: (01224) 371100
Fax: (01224) 371101

THIS IS A C.A.D. PRODUCED DRAWING AND SHOULD NOT BE MANUALLY MODIFIED

WorleyParsons
resources & energy

TITLE
PIPING AND INSTRUMENT DIAGRAM
PRODUCTION MANIFOLDS

DRAWING No.
SCOTT-WG-0000-PR-PD-0396.01

PROJECT	ORIG	AREA/MOD	DISC	TYPE	SEQ. No.	SHT.	REV	SCALE
							Z1	NONE