QTY	MAKE FROM / MATERIAL	WT KG	QTY	SYMBOL	DESCRIPTION	PT
			1	C0652500000	LUBE OIL & SEAL GAS SCHEMATIC	000

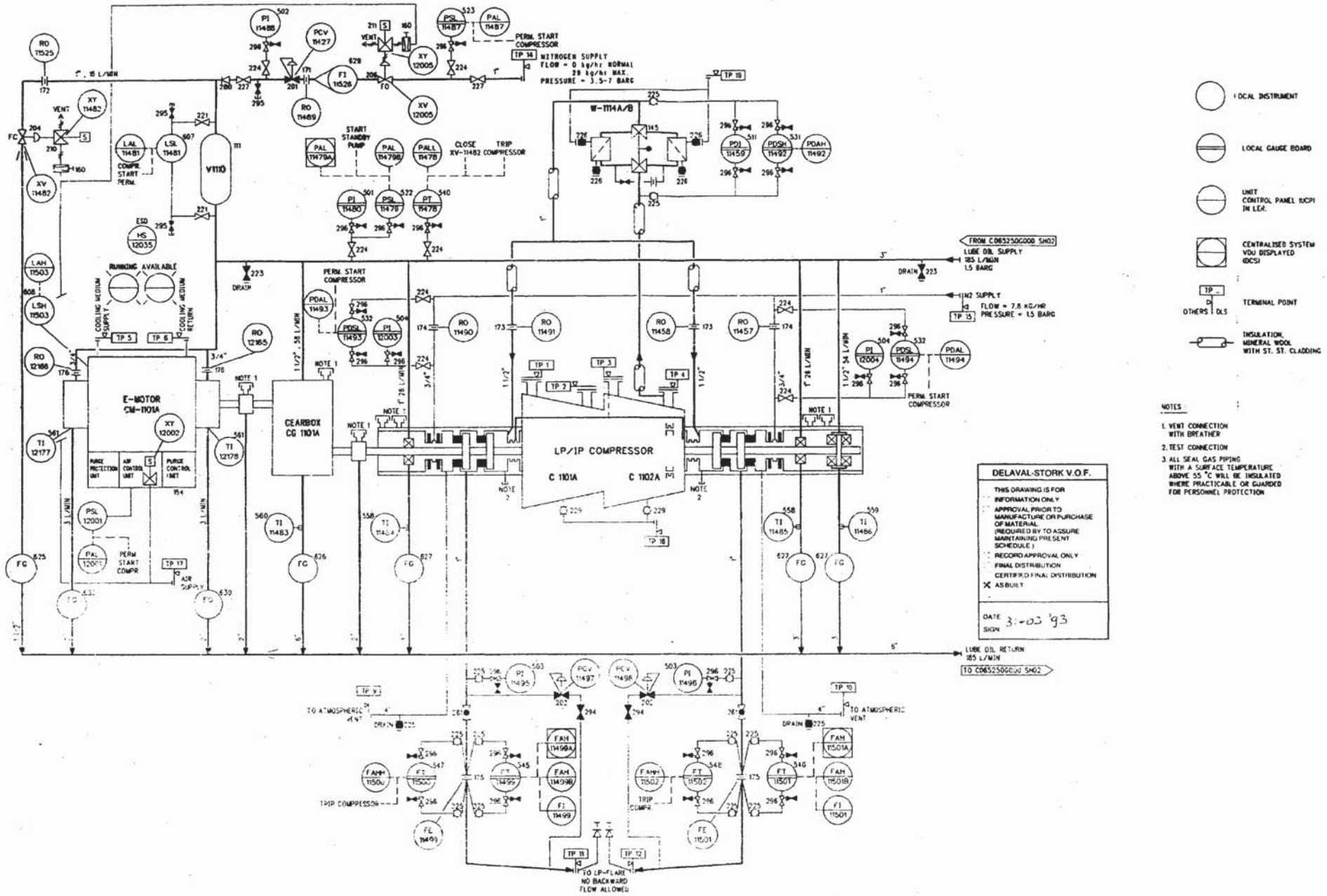

REV	DATE	BY	DO CHKD	ENG. CHECK	LE APP'D	DESCRIPTION

REVISIONS

DRAWING NO.	TITLE

REFERENCE DRAWINGS

DRAWING STATUS

THIS IS A RASTER/VECTOR HYBRID C.A.D. DRAWING AND MUST NOT BE MANUALLY MODIFIED.

A1	NAME	DATE
DRAWN BY		
DO CHECKED BY		
ENG. CHECK BY		
ENG. APP'D BY		
HESS APPROVAL		
JOB No.		
SCALE		
CONTRACTOR		

HESS

AMERADA HESS LIMITED
Scott House,
Hardmans Road-Altens,
Aberdeen AB1 4LE
Tel: (0224) 243000
Telex: 739621
Fax: 243212

TITLE

Compressor Package Lube Oil and Seal Gas Schematic CY1101A

INSTALLATION

DRAWING NUMBER: SCOTT-P0002-D-1002-01

REV: 9

©This drawing is the property of Amerada Hess Limited. It should not be reproduced, copied, modified or displayed