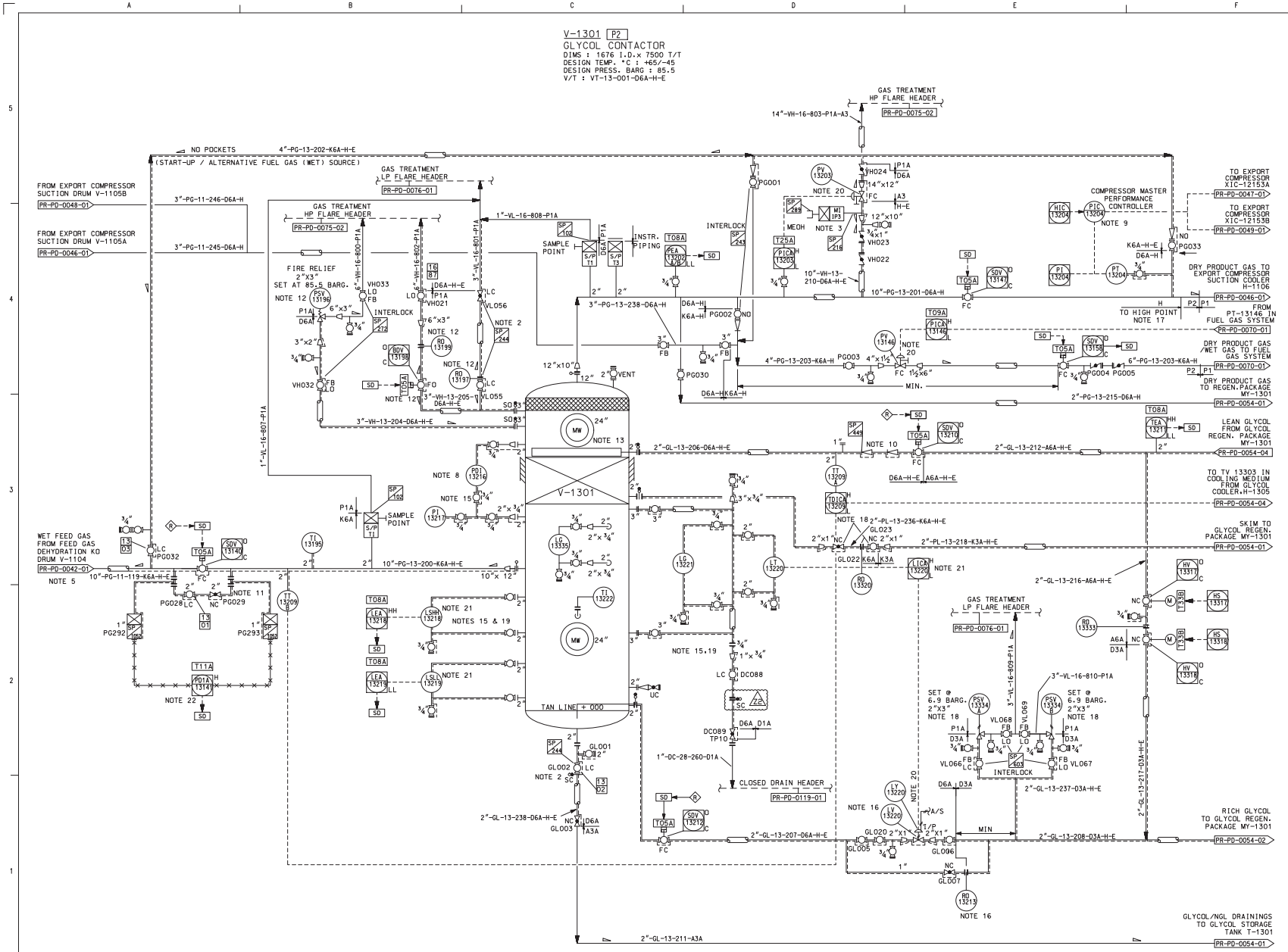

NOTES

1. DELETED
2. VALVES TO BE INTERLOCKED SUCH THAT DRAIN VALVE CAN ONLY BE OPENED IF VENT VALVES ARE OPEN.
3. METHANOL INJECTION AT PIPING HIGH POINT.
4. DELETED.
5. PIPE LENGTH BETWEEN FEED GAS DEHYDRATION KO DRUM.V-1104 AND GLYCOL CONTACTOR.V-1301 TO BE AS SHORT AS POSSIBLE.
6. PSV AND VENT INLET/DISCHARGE PIPING IS NOT TO BE POCKETED. DISCHARGE PIPING IS TO SLOPE TO FLARE HEADER.
7. DRAIN LINE TO SLOPE TO DRAIN HEADER.
8. PDI 13216 TO INDICATE PRESSURE DROP ACROSS STRUCTURED PACKING ONLY.
9. BY COMPRESSOR SELLER.
10. TWO CHECK VALVES OF DIFFERENT TYPES.
11. LOCATE BYPASS AT SIDE OR TOP OF LINE.
12. TO BE SIZED BY GLYCOL DEHYDRATION PACKAGE SELLER.
13. LIQUID DISTRIBUTOR EITHER BY STRUCTURED PACKING SELLER OR APPROVED BY SELLER.
14. DELETED.
15. INSTRUMENT HEAT TRACING AND INSULATION DESIGN/DETAILS BY GLYCOL DEHYDRATION PACKAGE SELLER. ALL MATERIALS AND INSTALLATION BY MODULE YARD FABRICATOR.
16. FREE ISSUE BY DEHYDRATION UNIT PACKAGE SELLER. LOCATE CONTROL VALVE MINIMUM DISTANCE FROM H-1302 WITH CONSTANT FALL TO H-1302.
17. LINE TO SLOPE FROM HIGH POINT.
18. FREE ISSUE BY SELLER. PSV-13334A/B TO BE MIN. ELEVATION ABOVE GL-13-208.
19. BRIDLE TO HAVE THERMOSTATICALLY CONTROLLED HEAT TRACING.
20. MILLI-AMPERE INDICATOR INSTALLED ADJACENT TO VALVE.
21. HHLL 750
    HLL 575
    NLL 500
    LLL 375
    LLLL 300
22. HARDWARE INTERLOCK TO PREVENT SDV-13140 BEING OPENED AGAINST DIFFERENTIAL PRESSURE GREATER THAN 5 BAR.

ONLY ACTIVATED TRACE HEATING IS SHOWN ON P & ID, ALL OTHER INSTALLED TRACE HEATING IS NOT ACTIVATED AND NOT SHOWN ON P & ID.

FOR APPROVAL SIGNATURES SEE ARCHIVED DRAWING AT REV 0

REFERENCE DRAWINGS

DRG.No.	REV	TITLE
		DCP 5000 ARN 1697 (EP-178)
		DCP 5000 ARN 1737 (EP-186)
		DCP 5000 ARN 1988 (EP-205)
		DCP 307 ARN 2158 (EMM-035 / EP-194)
		DCP 5000-755 ARN 6346 (EP-238)
		DCP 5000-729 ARN 6460 (EPJ-012)
P0250-D0001-02		VENDOR P&ID

REV	REASON FOR ISSUE	DATE	DRN.	CKD.	BY ENG	ENG CKD.	L.E. APP'D	CNOOC APP'D
Z1	AS-BUILT FOR SIC0043	27/09/17	DD	LM	LM	RS	RS	TR
21	AS BUILT FOR SEQ1470	04/12/14	FL	RB	RB	JM	AH	TR
20	AS BUILT AS PER SEQ1470 (CS-WP-10)	14/04/14	KD	SAW		VR	TR	TR
19	AS BUILT AS PER SEQ1470 (ST-02-01)	25/06/13	KD	SAW	CMA	NW	NW	TR
18	AS BUILT AS PER SEQ1475	20/09/10	FR	JD	JD	NW	NW	TR
17	AS BUILT TO INCLUDE S786	14/10/09	DP	EM	EM	AL	AL	GL

REV	REASON FOR ISSUE	DATE	DRN.	CKD.	BY ENG	ENG CKD.	L.E. APP'D	CNOOC APP'D
16	AS BUILT TO INCLUDE SEQ1227	09/04/08	VM	TW	TW	AL	AL	GL
15	AS-BUILT TO REFLECT S1080 & S1091	13/02/04	AF	BH			BH	MS
14	AS-BUILT TO INCLUDE S786	26/10/00	MW	PC	PC			
13	AS BUILT TO INCLUDE VENDOR PACKAGE INFO (DO 209) & DO-254	18/02/95	GWM	RT				
12	AS COMMISSIONED	28/04/94	CW	DM			KJH	
Z2	AS-BUILT FOR SIC0092	09/10/20	EM	LM				TR

cnooc

THIS IS A C.A.D. PRODUCED DRAWING AND SHOULD NOT BE MANUALLY MODIFIED

SCOTT

Worley energy | chemicals | resources

TITLE

PIPING & INSTRUMENT DIAGRAM
GAS TREATING SYSTEM
GLYCOL CONTACTOR

DRAWING No. SCOTT-FW-0000-PR-PD-0053-01

PROJECT	ORG.	AREA/MOD	DISC	TYPE	SEQ. No.	SHT.		REV	SCALE
								Z2	NTS