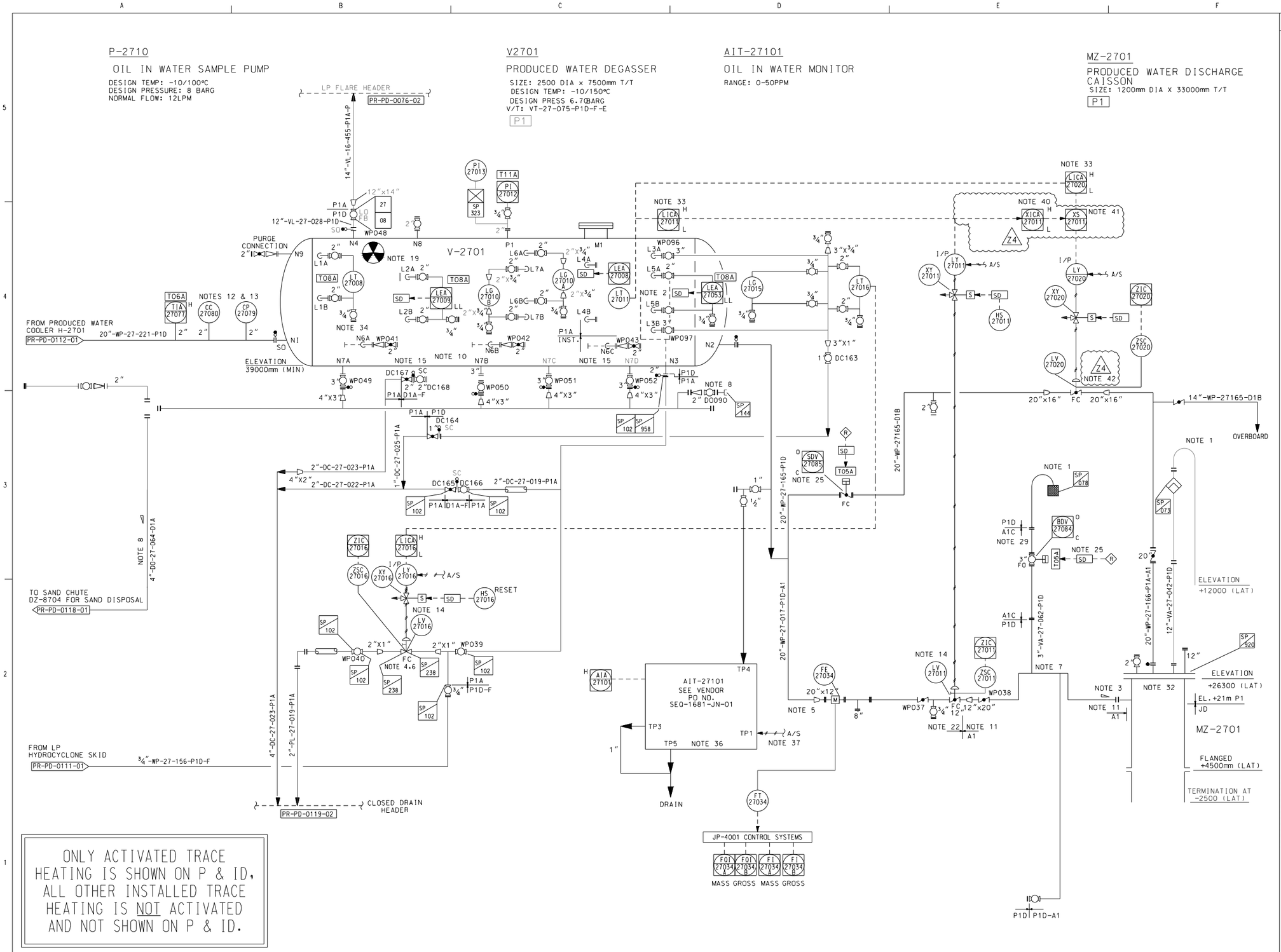

ONLY ACTIVATED TRACE HEATING IS SHOWN ON P & ID, ALL OTHER INSTALLED TRACE HEATING IS NOT ACTIVATED AND NOT SHOWN ON P & ID.

NOTES

1. VENT AT SAFE LOCATION.
2. INTERNAL OIL COLLECTION WEIR BOX.
3. GRAVITY FLOW.
4. LOCATE VALVE 5M MIN BELOW V-2701.
5. FE 27034 IS SUPPLIED BY JP 4001 SELLER. PROVIDE MINIMUM STRAIGHT LENGTHS 5D UPSTREAM AND 2D DOWNSTREAM.
6. LV27016 IS SHUT BY LEAHH 27008 AND LEALL 27053.
7. LOOP SEAL TO BE AT LEAST 1500mm LIQUID SEAL.
8. SAND DISPOSAL LINES TO SLOPE TOWARDS DISPOSAL SYSTEM WITH NO POCKETS. MAXIMISE SLOPES WHERE POSSIBLE. CONNECTIONS TO HEADER SHOULD BE VIA LATERAL TEE.
9. FOR DISPOSAL VIA CONNECTION TO TRANSPORTABLE TANKS.
10. INTERNAL SANDWASH PIPEWORK & JETTING NOZZLES REMOVED. NOZZLES N6A/B/C ARE FITTED WITH INTERNAL PIPE COVER.
11. MAKE PROVISION FOR ACOUSTIC INSULATION ON LINE ABOVE DECK ONLY.
12. CORROSION COUPON AND CORROSION PROBE ASSEMBLY HAS 2" ACCESS FITTING (FLAREWELD TYPE). CONNECTION TO BE SUPPLIED BY INSTRUMENTS.
13. ACCESS FITTING TO BE LOCATED AT THE BOTTOM OF PIPE AND THE PROBE/COUPON TIP FLUSH WITH PIPE BOTTOM INNER WALL. ADEQUATE ACCESS BE PROVIDED SO THAT THE PROBE/COUPON CAN BE RETRACTED UNDER LINE PRESSURE.
14. LOCAL MILLI AMPERE INDICATOR TO BE INSTALLED ADJACENT TO VALVE
15. PERSONNEL PROTECTION INSULATION REMOVED FROM LOWER QUADRANT OF VESSEL SHELL (SE.TO SW.) BETWEEN TAN LINES.
16. DELETED
17. DELETED
18. DELETED
19. NUCLEONIC SOURCE FOR PRODUCED WATER LEVEL INSTRUMENTS LICA-27011 & LEAHH-27008 MOUNTED ON EXTERNAL PAD ON VESSEL.
20. DELETED.
21. DELETED.
22. FUTURE INSULATION
23. DELETED.
24. DELETED.
25. VALVE SDV 27085 AND BDV-27084 FEATURE AN ESD RESET. ESD FUNCTION OF VALVE LV-27011 FUNCTIONS AS A COMPLEMENTARY LOGIC
26. DELETED.
27. DELETED.
28. DELETED.
29. PIPE SECTION SPEC A1C HAS CORROSION ALLOWANCE OF 3mm. TEMPERATURE RANGE FROM -10 TO +65°C
30. DELETED.
31. DELETED.
32. INTERNAL NOZZLE PROVIDED AT CAISSON INLET
33. NORMAL CONTROL SET-POINT FOR LICA-27020 IS 55%. LV-27011 OPENS ABOVE 60% LEVEL AS CONTROLLED BY LICA-27011.
34. DELETED.
35. DELETED.
36. REFER TO SCOTT-AM-P100-JN-HP-0006-01 REV Z1 FOR AIT-27101 HOOK UP DETAILS.
37. AIR SUPPLY FROM REDUNDANT TIE IN FOR TEMPORARY SCALE INHIBITOR. RV SET AT 6.9 BARG DOWNSTREAM OF LET-DOWN REGULATOR
38. DELETED.
39. REDUNDANT LEVEL SWITCH (LT-27008) ELECTRICALLY ISOLATED AND LEFT IN SITU.
40. XICA-27011 PROVIDES ERROR-GAP FUNCTIONALITY WHERE LV-27020 MOVES OCCASIONALLY TO HANDLE LARGE FLOWRATE CHANGES AND LV-27011 PERFORMS CONTINUOUS FINE CONTROL.
41. SELECTOR SWITCH TO ENABLE WHICH CONTROLLER LICA-27020 OR XICA-27011 WHICH CONTROLS LV-27020.
42. DURING START UP WHEN XICA-27011 IS IN AUTOMATIC. LV-27020 WILL REMAIN CLOSED UNTIL GAP HI + 5% IS REACHED. Z4

FOR APPROVAL SIGNATURES SEE ARCHIVED DRAWING AT REV 0

REFERENCE DRAWINGS

DRG.No.	REV	TITLE
DCP5000 ARN 1983 (EP-206)		
DCP5000-729 ARN 6387 (EPJ-0140)		
DCP5000-787 ARN 6602 (EP-226)		
DCP5000 AH 255 ARN 1896 (EPJ-00078)		
DCP5000 AH 418 ARN 3885 (EP-215)		
DCP5000 AH 714 ARN 3945 (EP -239)		
DCP5000 AH 736 ARN 3977 (EP-241)		
DCP5000 AH 755 ARN 6353 (EP-238)		
DCP5000 AH 1054		

REV	REASON FOR ISSUE	DATE	DRN.	CKD.	BY ENG	ENG CKD.	L.E. APP'D	CNOOC APP'D
16	AS BUILT PER SEQ 1372	28.10.08	GH	EC	EC	NW	NW	MS
Z4	AS BUILT FOR SMOC2119	22.02.22	TPK	TPK	TPK	TF	GDTL	TR
Z3	AS BUILT PER SMOC2111 & SMOC2139	05.11.21	TF	TF	TF	JL	JL	TR
Z2	AS-BUILT FOR SIC0047	21.02.18	DD	AWC	AWC	LM	AWC	TR
Z1	AS-BUILT FOR SIC0040	30.06.17	DD	LM	LM	JL	JL	TR
23	AS BUILT TO SEQ 1681	01.10.14	LB	JM	JM	AH	AH	TR

REV	REASON FOR ISSUE	DATE	DRN.	CKD.	BY ENG	ENG CKD.	L.E. APP'D	CNOOC APP'D
22	CORRECTION PER SEQ1493 (REV 20)	16/10/12	GF	CMA	CMA		NW	TR
21	AS BUILT PER SEQ1594	19/09/12	GF	CMA	CMA	NW	NW	TR
20	AS BUILT PER SEQ1493	09/03/12	SAW	MM	NP	JSC	TR	TR
19	AS BUILT PER SEQ1088 (CORRECTION) & SEQ1303 WP2	14/10/10	FR	EM	EM	MU	MU	TR
18	AS BUILT PER SEQ1303	28/02/10	KM	EM	EM	AW	NW	GL
17	AS BUILT PER SEQ1353 AND SEQ1429	14/10/09	DP	EM	EM	AL	AL	GL

cnooc

THIS IS A C.A.D. PRODUCED DRAWING AND SHOULD NOT BE MANUALLY MODIFIED

SCOTT

Worley energy | chemicals | resources

TITLE

PIPING AND INSTRUMENT DIAGRAM
PRODUCED WATER DEGASSER

DRAWING No.

SCOTT-FW-0000-PR-PD-0112-02

Z4 | NONE

PROJECT	ORIG	AREA/MOD	DISC	TYPE	SEQ. No.	SHT.		REV	SCALE