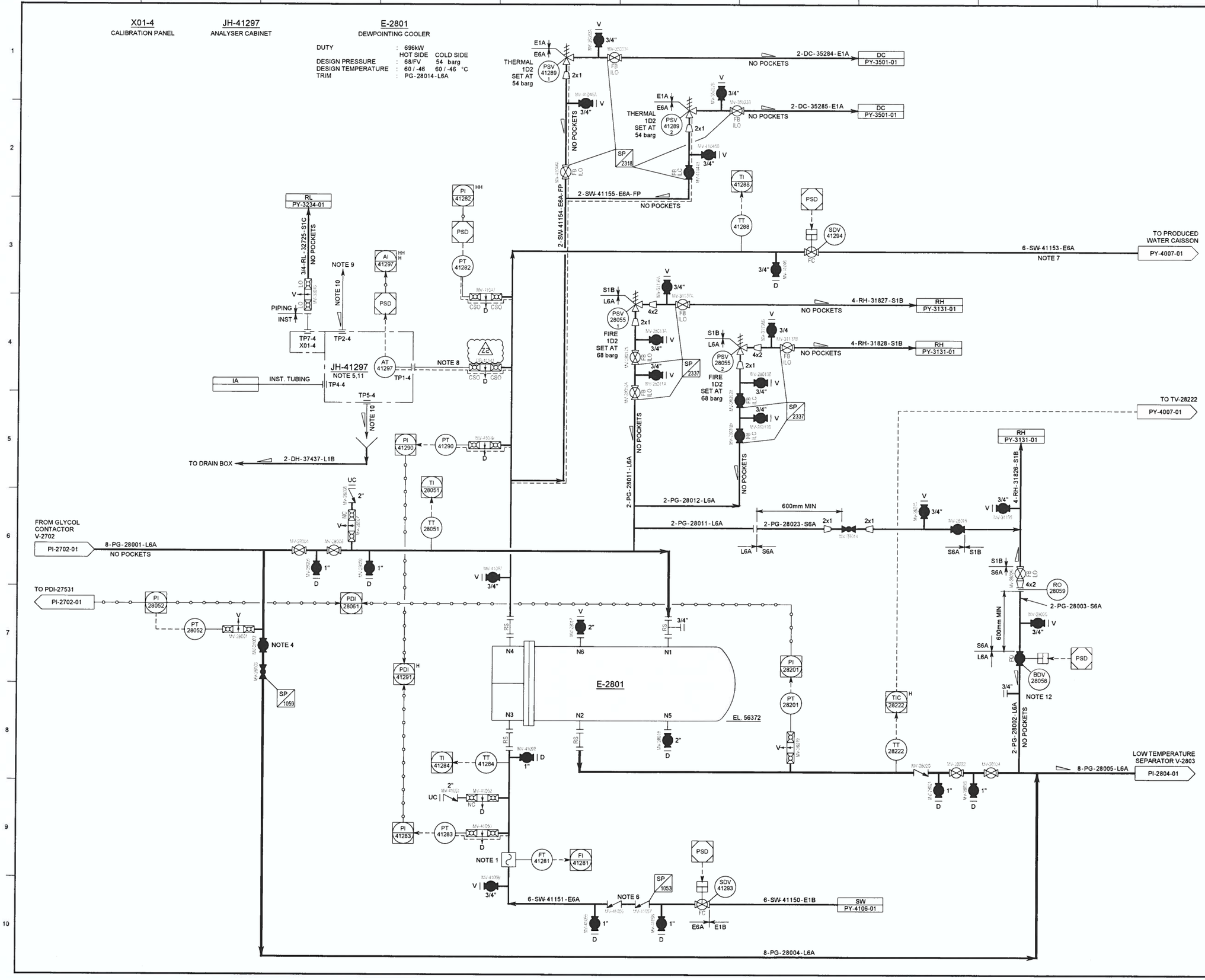

NOTES

REFER TO LEGEND SHEETS 168397-100-PR-PI-0001 TO 0012 FOR DETAILS OF PIPING CLASS, INSULATION, EQUIPMENT TYPES, INSTRUMENT DETAILS, VALVES AND SPECIFIC HOOK-UP REQUIREMENTS.

1. FLOWMETER TO HAVE MINIMUM STRAIGHT LENGTHS AS SPECIFIED BY THE INSTRUMENT GROUP.
2. DELETED.
3. DELETED.
4. BYPASS PROVIDED TO ALLOW OPERATION IF COOLER IS UNAVAILABLE.
5. HYDROCARBON DETECTION TO WARN OF GAS LEAKAGE INTO THE SEAWATER.
6. TWO DISSIMILAR CHECK VALVES REQUIRED.
7. LINE TO BE SUPPORTED FOR SLUG FLOW.
8. SAMPLE PROBE, ISOLATION VALVE AND PRE TRACED SAMPLE TUBING BUNDLE BY ANALYSER SUPPLIER.
9. VENT TO ATMOSPHERE AT SAFE LOCATION.
10. 10mm TUBING BY INSTRUMENTS.
11. FOR DETAILS REFER TO VENDOR P&ID 168397-100-PO-5017-MC2-003.
12. BDV-28058 ACTUATOR REQUIRES PASSIVE FIRE PROTECTION AND BLAST PROTECTION.

REV	DATE	DESCRIPTION	DRN	CHK	APP	CLT
Z1	08/08/2014	AS BUILT INC. RN 04 - 05	JPN	JG	JG SH	JM
1H	22/05/2012	REVISED FOR CONSTRUCTION INC. RN 03	TSC	MF	RJD IV	SA
0H	20/01/2012	AFC INC. RN 02	TSC	MF	RJD IV	SA
D2	28/10/2011	REVISED FOR DESIGN INC. RN 01	ARG	TSC	RJD IV	SA
D1	15/07/2011	APPROVED FOR DESIGN	ARG	MF	RJD IV	SA
Z2	15/05/23	AS-BUILT FOR GIC0121	SD	GDTL	TF	

cnooc

Golden Eagle
Golden Eagle Area Development

Worley
energy | chemicals | resources

TITLE:
PIPING & INSTRUMENT DIAGRAM
DEWPOINTING COOLER

SCALE (A1): NTS

ASSAI No: PR08PU0070

CONTRACT No: 168397

CLIENT CONTRACT No: GEA-CT -CON-00808

DRAWING No. 168397 - 100 - PR - PI - 2801 - 01

REV Z2