ITEM No.	W-1302	W-1301A/B	H-1305	P-1301A/B
UNIT	GLYCOL CARBON FILTER	GLYCOL FILTERS	GLYCOL COOLER	GLYCOL CIRCULATION PUMPS
SIZE / DUTY :	610mm O.D. x 2440mm T/S.	610mm O.D. x 1220mm T/S	B.F.T. MODEL No 08240JMTBAAC	TBA
DES PRESS / TEMP :	6.9 BARG AT -10/110°C	6.9 BARG AT -10/110°C	TUBES : 85.5 BARG AT -10 / 240°C SHELL : 18.7 BARG AT -10 / 65°C	85.5 BARG AT -10 / 240°C
OPER PRESS / TEMP :	2.0 - 3.1 BARG AT 82°C	2.0 - 3.1 BARG AT 82°C	TUBES : 82.6 BARG AT 94 / 40°C SHELL : 4.9 BARG AT 13.3 / 30°C	4.357m³ / HR vs 82.6 BARG
INSULATION :	HEAT CONSERVATION	HEAT CONSERVATION	PERSONNEL PROTECTION	NONE
TRIM :	31	31	B1	61

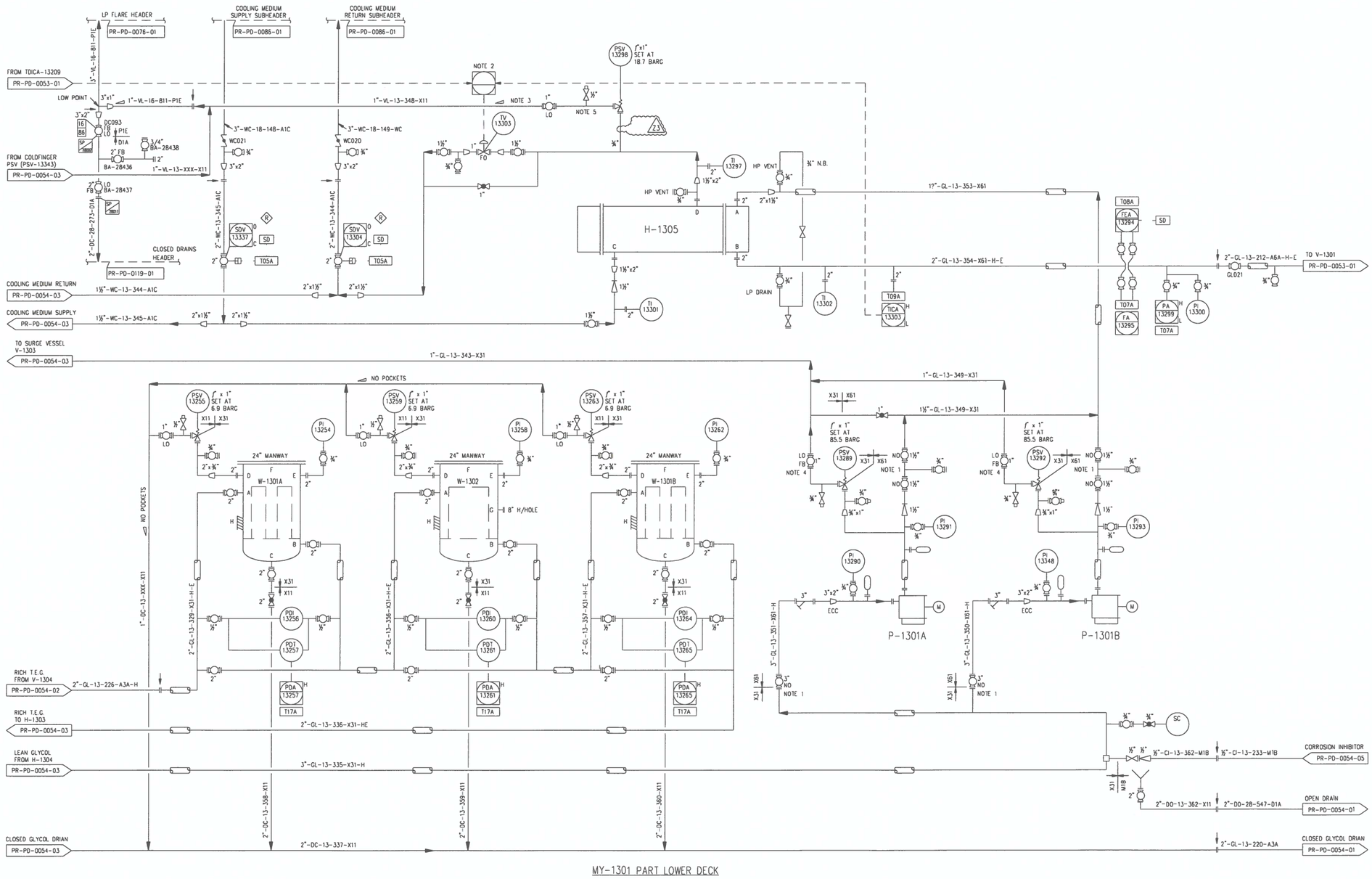

MY-1301 PART LOWER DECK

NOTES

1. VALVES TO BE PADLOCKED OPEN TO FACILITATE AUTO START-UP OF STAND-BY PUMP.
2. TWO POSITION SWITCH IN CENTRAL CONTROL ROOM
   POSITION 1 : START UP TICA-13303 CONTROL
   POSITION 2 : CONTACTOR TDICA-13209 CONTROL
3. ALL FLARE LINES TO BE RUN WITH A MINIMUM SLOPE OF 1:50 AND ALL FLARE CONNECTIONS TO BE VIA 45° LATERAL TEE.
4. INTERLOCK WITH ASSOCIATED PUMP AND MOTOR STARTER. (BY OTHERS)
5. RELIEF VALVES PHILOSOPHY INSIDE THE REGENERATION PACKAGE IS TO REFLECT OFF-SKID EQUIPMENT I.E. DUAL R.V.'s ON NON-TRAINED CAPACITY RELIEF SERVICE AND SINGLE R.V.'s ON FIRE RELIEF SERVICE.
6. DELETED.

ONLY ACTIVATED TRACE HEATING IS SHOWN ON P & ID, ALL OTHER INSTALLED TRACE HEATING IS NOT ACTIVATED AND NOT SHOWN ON P & ID.

REFERENCE DRAWINGS

DRG No.	REV	TITLE
		DCP-5000 ARN 1738 (EP-186)
		DCP-5000 ARN 1989 (EP-205)
		DCP-307 ARN 2159 (CMM 035/EP-194)
		DCP-5000-671 ARN 3199 (EP 235)
		DCP-5000-755 ARN 6356 (EP 238)
		DCP-5000-AH1054

REV	REASON FOR ISSUE	DATE	DRN.	CKD.	BY ENG	ENG CKD.	L.E. APP'D	CNOOC APP'D
Z3	AS-BUILT FOR 2106748	27.05.19	LM	LM	LM	JL	JL	M

REV	REASON FOR ISSUE	DATE	DRN.	CKD.	BY ENG	ENG CKD.	L.E. APP'D	CNOOC APP'D
Z2	AS-BUILT FOR SMOC1860	03.11.17	DD	LM	LM	SB	SB	TR
Z1	AS-BUILT FOR SMOC1860	21.10.16	LM	LM	LM	AH	AH	TR
13	UPDATED TO REFLECT SEQ-1080	12.12.03	GPG	SH	DB		MS	19.12.03
12	AS BUILT TO INCLUDE DO-334	08-08-96	PS	GWM				
11	REVISED TO CHANGE PSV No. FROM PSV-13288 TO PSV-13289	08-05-96	CS	GWM			KJH	
10	AS BUILT TO INCLUDE VENDOR PACKAGE INFO (DO-209) & DO-254	09-04-95	RTS	JN			KJH	

cnooc

THIS IS A C.A.D. PRODUCED DRAWING AND SHOULD NOT BE MANUALLY MODIFIED

SCOTT

WorleyParsons resources & energy

TITLE PIPING AND INSTRUMENT DIAGRAM
GAS TREATMENT SYSTEM
GLYCOL REGENERATION PACKAGE

DRAWING No. SCOTT-FW-0000-PR-PD-0054-04 | REV Z3 | SCALE NONE

PROJECT	ORIG	AREA/MOD	DISC	TYPE	SEQ. No.	SHT.