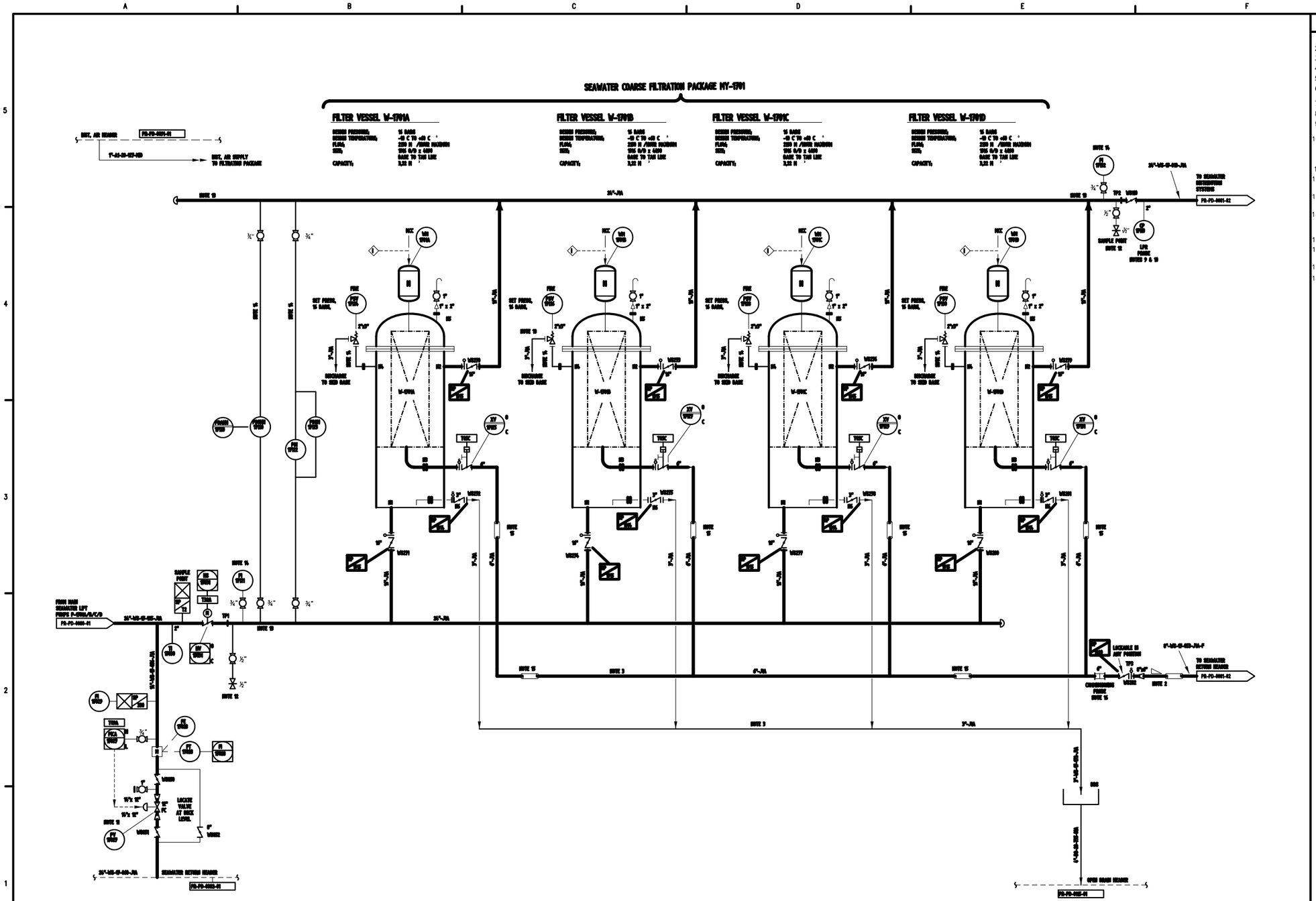

NOTES

1. DELETED.
2. SEAWATER RETURN HEADER & LEADS MUST NOT BE POCKETED.
3. BACKWASH & DRAIN LINES TO BE SELF DRAINING WITHOUT POCKETS.
4. DELETED.
5. DELETED.
6. REFERENCE P&ID. SEE PLENTY METROL LTD. DRAWING NUMBER 96730-02-01. PROJECT DOCUMENT P0051 D0001.
7. DELETED.
8. DELETED.
9. LPR PROBE ASSEMBLY HAS 2" ACCESS FITTINGS (FLAREWELDED TYPE) CONNECTIONS TO BE SUPPLIED BY INSTRUMENTS.
10. ACCESS FITTING TO BE LOCATED AT THE BOTTOM OF THE PIPE AND THE PROBE TIP FLUSH WITH PIPE TIP INNER WALL. ADEQUATE ACCESS SHALL BE PROVIDED SO THAT THE PROBE CAN BE RETRACTED UNDER LINE PRESSURE.
11. LOCAL MILLIAMPERE INDICATOR TO BE INSTALLED ADJACENT TO VALVE.
12. SAMPLE POINTS TO TERMINATE AT COMMON LOCATION AT SKID EDGE AND TO BE SELF DRAINING WITHOUT POCKETS.
13. PI & SAMPLE POINT CONNECTIONS TO BE ISO# WELDOFLANGE PER SPEC. SCOTT-FW-T100-ME-SP-0602-00.
14. WINTERISATION SHALL CONSIST OF HEAT TRACING PER SPECIFICATION SCOTT-FW-0000-EL-SP-0018-00 TOGETHER WITH CLASS HE INSULATION PER SPEC. SCOTT-FW-0000-CT-SP-0005-00.
15. FROST PROOFING CLASS F PER SPEC. SCOTT-FW-0000-CT-SP-0005-00.
16. COMMISIONING PROBE IS REQUIRED FOR SETTING BACK WASH FLOW DURING COMMISSIONING.
17. DELETED.
18. PSV-17126 TO BE INSTALLED UNDER FUTURE WORKPACK. TEMPORARY BURSTING DISC TO BE INSTALLED IN THE INTERIM.

ONLY ACTIVATED TRACE HEATING IS SHOWN ON P & ID. ALL OTHER INSTALLED TRACE HEATING IS NOT ACTIVATED AND NOT SHOWN ON P & ID.

REFERENCE DRAWINGS

DRG.No.	REV	TITLE

REV	REASON FOR ISSUE	DATE	DRN.	CKD.	BY ENG	ENG CKD.	L.E. APP'D	NEXEN APP'D
3	REVISED FOR LATEST INFORMATION	10.05.93	KM	KM	JS		JS	KTL
2	REVISED FOR CONSTRUCTION	10.02.92		GC	RT		BAR	KTL
1	REVISED FOR CONSTRUCTION	16.10.91	ID	GC	RT		RT	KTL
0	APPROVED FOR CONSTRUCTION	7.6.91		JS	RT	JS	BAR	KTL
HD	APPROVED FOR FINAL DESIGN	12-3-91	MJC	JS	RT	JS	JHC	KTL
GD	REVISED FOR DESIGN	18.12.90	MJC	JS	RT	JS	JHC	

REV	REASON FOR ISSUE	DATE	DRN.	CKD.	BY ENG	ENG CKD.	L.E. APP'D	NEXEN APP'D
FD	REVISED FOR DESIGN	24.9.90	RB	IME	RT	JS	JHC	
ED	REISSUED FOR COMPANY REVIEW	7.9.90	RB	JS	RT	JS		
14	AS BUILT PER SEQ1330 ONLY	8.10.07	VM	MU	MU	AL	AL	
13	AS BUILT TO INCLUDE DO-476	12.4.99	BS	SC JN				
12	AS BUILT TO INCLUDE VENDOR PACKAGE INFO (DO 209) & DO-254	03.04.95	TS	JN				
11	AS COMMISSIONED	29.4.94	CW	DM			K.JH	

nexen
Nexen Petroleum U.K. Limited
NEXEN House,
Hareness Road,Altens,
Aberdeen.AB12 3LE
Tel: (01224) 371100
Fax: (01224) 371101

THIS IS A C.A.D. PRODUCED DRAWING AND SHOULD NOT BE MANUALLY MODIFIED

SCOTT | AkerSolutions

TITLE
PIPING AND INSTRUMENT DIAGRAM
SEAWATER COARSE FILTRATION

DRAWING No.
SCOTT-FW-0000-PR-PD-0081-01

PROJECT	ORIG	AREA/MOD	DISC	TYPE	SEQ. No.	SHT.		REV	SCALE
								14	NTS