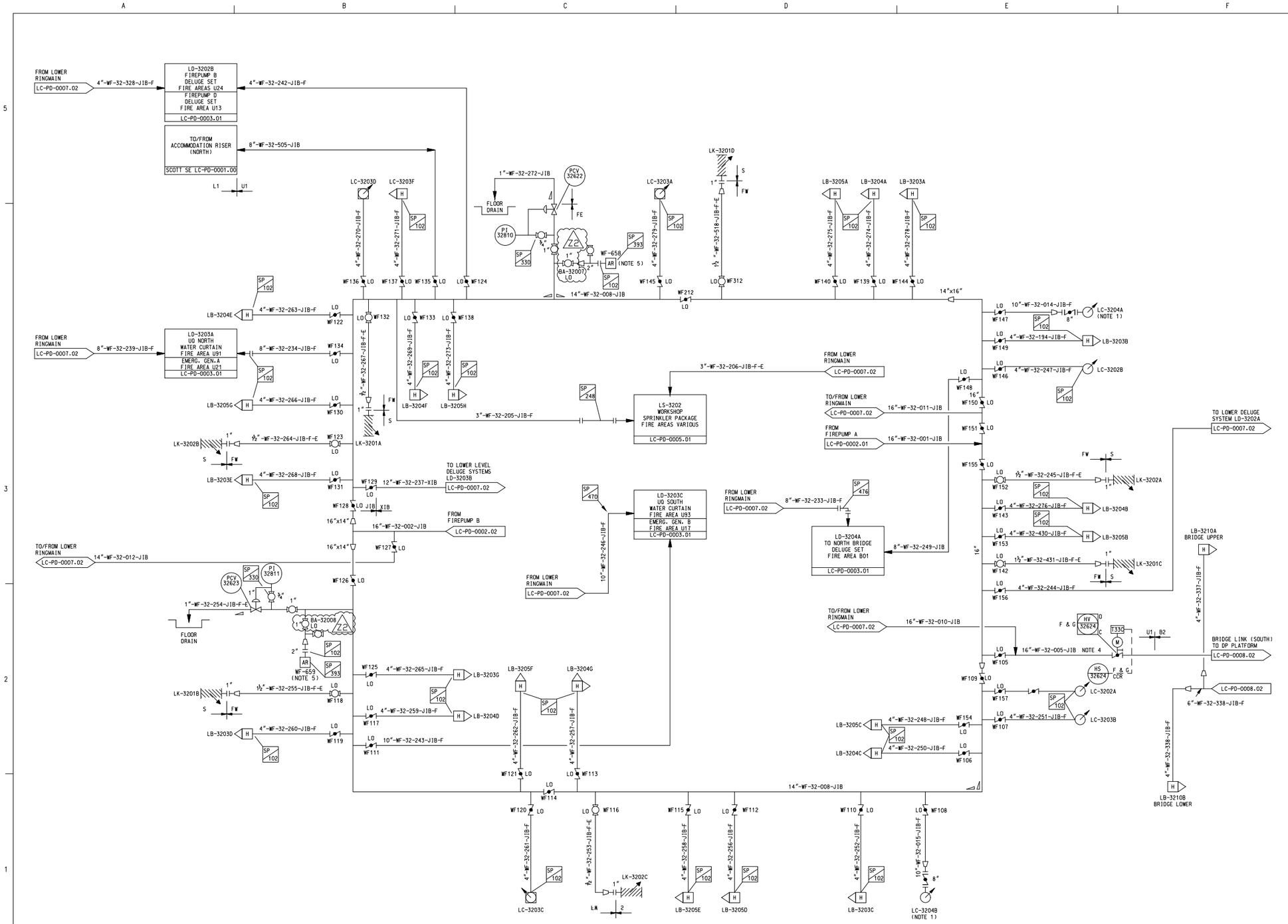

NOTES

1. HIGH CAPACITY MONITORS.
2. ALL STAGNANT LINES 3" AND BELOW TO BE TRACED AND INSULATED FOR WINTERISATION.
3. ALL RINGMAIN ISOLATION VALVES TO BE LO.
4. REMOTE OPERATED RINGMAIN VALVES TO BE GROUPED FOR ISOLATION OF NORTH & SOUTH BRIDGES FROM CCR, SOUTH BRIDGE HV-32624, HV32594 AND HV-32605 OPERATED BY HS-32670.
5. INFLOW CHECK VALVE REQUIRED.

FOR ORIGINAL DESIGN APPROVAL SIGNATURES SEE ARCHIVED DRAWING AT REV 0

ONLY ACTIVATED TRACE HEATING IS SHOWN ON P & ID, ALL OTHER INSTALLED TRACE HEATING IS NOT ACTIVATED AND NOT SHOWN ON P & ID.

REFERENCE DRAWINGS

DRG.No.	REV	TITLE

REV	REASON FOR ISSUE	DATE	DRN.	CKD.	BY ENG	ENG CKD.	L.E. APP'D	CNOOC APP'D
Z2	AS-BUILT FOR SIC0090	12.08.20						TR
Z1	AS-BUILT FOR SIC0026	07.02.17	DD	LM	LM	DB	JL	IL
13	AD HOC AS BUILT	03.12.14	AG	JM	JM	AH	AH	TR
12	AS BUILT AS PER SEQ1518	05.05.10	ER	AW	GL	AMac	NW	TR
11	AS BUILT TO INCLUDE SEQ1362	10/04/08	VM	EHC	EHC	AL	AL	GL
10	REDRAWN ON CAD & AS BUILT TO INCLUDE DO 256	18-07-95	KM	JN				

THIS IS A C.A.D. PRODUCED DRAWING AND SHOULD NOT BE MANUALLY MODIFIED

SCOTT

Worley

TITLE

PIPING & INSTRUMENT DIAGRAM
UQ FIRE WATER DISTRIBUTION
UPPER RINGMAIN

DRAWING No.

SCOTT-FW-T100-LC-PD-0007-03

PROJECT	ORIG	AREA/MOD	DISC	TYPE	SEQ. No.	SHT.	REV	SCALE
							Z2	NONE