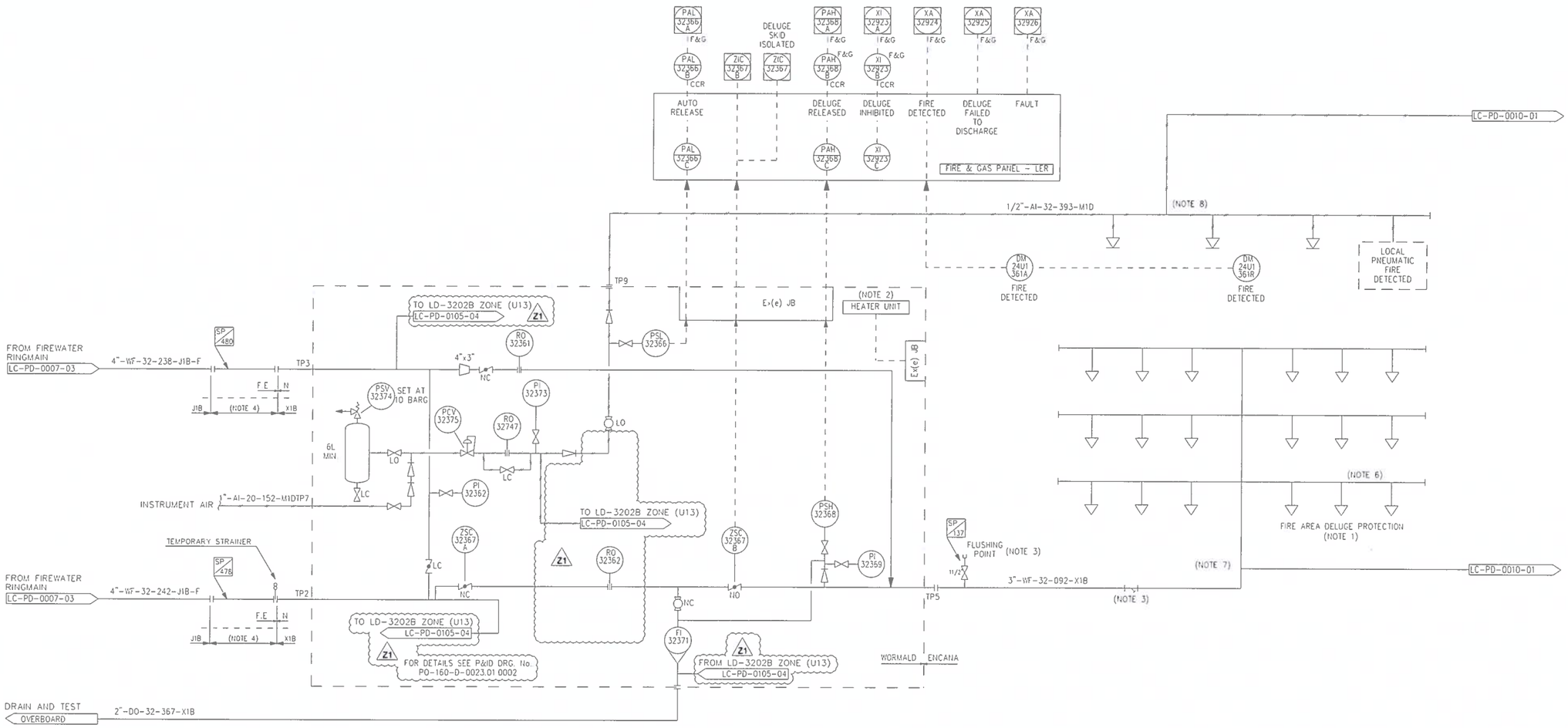

NOTES

1. THIS COVERAGE SHOWN IS TYPICAL ONLY. DELUGE SKIDS WILL FEED GENERAL SYSTEMS AND UNDERDECK SYSTEMS
2. DELUGE VALVE SKID TO BE PROVIDED WITH AN ENCLOSURE AND HEATER FOR WINTERISATION THUS NO TRACING REQUIRED ON SKID.
3. FLUSHING POINT(S) REQUIRED FOR FIRE AREAS U12,U13,U21,U24,U25,U17. PERMANENT Y TYPE STRAINERS
4. SPOOL PIECE TO BE 1500mm.OR 5 X DIAMETER, WHICH EVER IS THE GREATER.
5. FOR ARRANGEMENT OF DELUGE DISTRIBUTION PIPING SEE RELEVANT FIRE PROTECTION LAYOUT
6. WEEP HOLES TO BE SITE DRILLED AT LOW POINTS TO ENSURE SYSTEM IS FULLY SELF DRAINING AFTER USE.
7. TIE-IN POINT IS INDICATIVE ONLY. REFER TO FIRE PROTECTION STUDIES FOR EXACT LOCATIONS.
8. TIE-IN POINT IS INDICATIVE ONLY. REFER TO PNEUMATIC HEAT DETECTOR LAYOUT FOR EXACT LOCATION.

REFERENCE DRAWINGS

DRG.No.	REV	TITLE
JN-HP-5274.01		LD-3202A & LD-3202B INSTRUMENT HOOK-UP
PO-160-D-0023		P&ID FOR 3" DELUGE VALVE SKID LD-3202B
LC-PD-0010.01		P&ID TELFORD FOAM SYSTEMS
LC-PD-0007.03		P&ID UO FIREWATER DISTRIBUTION UPPER RINGMAIN
LC-PD-0105.04		P&ID FW DELUGE PACKAGE LD-3202B FIRE PUMP 'D' ZONE (U13)

REV	REASON FOR ISSUE	DATE	DRN.	CKD.	BY ENG	ENG CKD.	L.E APP'D	CNOOC APP'D
Z1	AS-BUILT FOR SEQ1099	27.09.22	TPK	TPK	TPK	TF	TF	M

REV	REASON FOR ISSUE	DATE	DRN	CKD	BY ENG	ENG CKD.	L.E APP'D	CNOOC APP'D

cnooc

THIS IS A C.A.D. PRODUCED DRAWING AND SHOULD NOT BE MANUALLY MODIFIED

SCOTT

Worley

TITLE

PIPING AND INSTRUMENT DIAGRAM
FIREWATER DELUGE PACKAGE LD-3202B
FIRE PUMP 'B' ZONE (U24)

DRAWING No.

SCOTT-WG-T000-LC-PD-0105-03

Z1

NONE

PROJECT	ORIG	AREA/MOD	DSC	TYPE	SEQ. No	SHT.		REV	SCALE