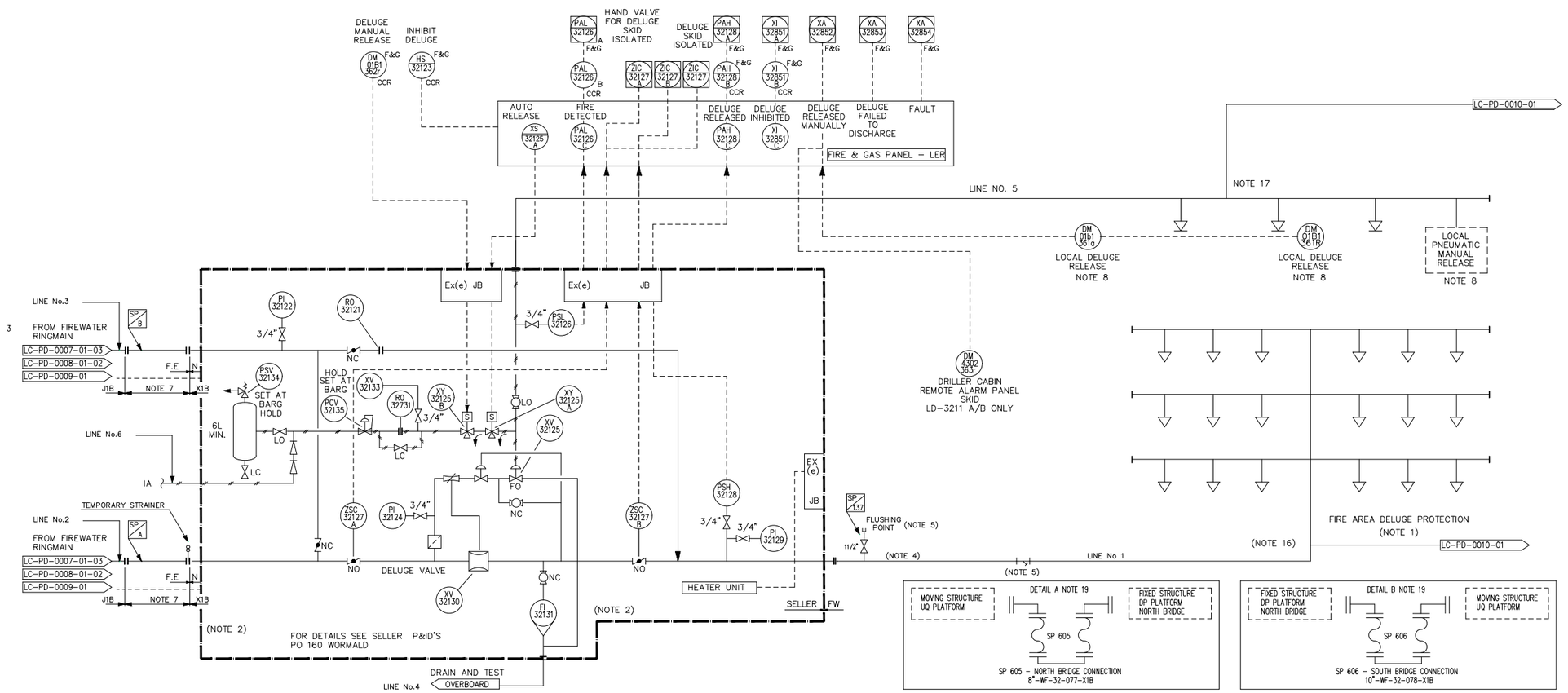

FIRE AREA LOCATION	NO.	DELUGE SKID NO.	DELUGE VALVE SIZE N.B."	SPOOL SP NO. A	SPOOL SP NO. B	LINE NO.1 DISTRIBUTION	LINE NO.2 SUPPLY	LINE NO.3 BY-PASS	LINE NO.4 DRAIN	LINE NO.5 AIR TRIGGER	LINE NO.6 INST.AIR	NOTES
BRIDGE NO. 1 NORTH UQ	B01	LD-3204-A	8	475	479	8"-WF-32-077-X1B	8"-WF-32-249-JIB-B	8"-WF-32-233-JIB-F	2"-DO-32-349-X1B	1/2"-AI-32-375-M1D	1"-AI-20-156-M1D	NOTE 19 DETAIL A
ESD VALVES SOUTH	P06	LD-3213-A	6	482	481	6"- - -136- -	10"- - -339- F	10"- - -340-JIB-F	- - - -350- -	- - - -376- -	- - - -167- -	
BRIDGE NO. 2 SOUTH UQ	B02	LD-3203-B	10	466	467	10"- - -078- -	12"- - -241- F	12"- - -237-JIB	- - - -351- -	- - - -377- -	- - - -154- -	NOTE 19 DETAIL B
ESD VALVES NORTH	P08	LD-3204-B	3	473	474	3"- - -137- -	3"- - -419-JIB-F-E	3"- - -420-JIB-F-E	- - - -352- -	- - - -378- -	- - - -157- -	
ACCOM.ROOF (HELIFUEL) (NOTE 4)	L70	LD-3201	3			3"- - -079- -	3"- - -013-JIB-F-E	3"- - -133-JIB-F-E	- - - -353- -	- - - -379- -	- - - -150- -	
WELLHEAD	P04	LD-3206-A	10	481	481	10"- - -080- -	10"- - -494-JIB-F	10"- - -067-JIB-F	- - - -354- -	- - - -380- -	- - - -159- -	
WELLHEAD UPPER (MONITORS)	P25	LD-3206-B	8	461	462	8"- - -081- -	12"- - -048- F	12"- - -050-JIB	- - - -355- -	- - - -381- -	- - - -160- -	
MANIFOLD	P05	LD-3205	8	465	465	8"- - -074- -	8"- - -058- F	8"- - -059-JIB-F	- - - -356- -	- - - -382- -	- - - -158- -	
UNDERDECK SYSTEM DP LEVEL 1	P91	LD-3213-A	10	482	481	10"- - -082- -	10"- - -339- F	10"- - -340- F	- - - -350- -		- - - -167- -	
GAS TREATMENT	P10	LD-3210-A	8	494	495	8"- - -083- -	10"- - -037- F	10"- - -534- F	- - - -358- -	- - - -384- -	- - - -165- -	
TELFORD/ROCHELLE SEPARATOR AREA	P20	LD-3210-A	8	494	495	8"- - -083- -	10"- - -037- F	10"- - -534- F	- - - -358- -	- - - -384- -	- - - -165- -	NOTE 15
UNDERDECK SYSTEM DP LEVEL 2	P92	LD-3212	10	464	464	10"- - -084-	10"- - -189- F	10"- - -056- F	- - - -359- -		- - - -166- -	
CHEMICAL INJECTION AREA	P21	LD-3206-A	6	481	481	6"- - -085-	10"- - -494- F	10"- - -067- F	- - - -354- -	- - - -386- -	- - - -159- -	NOTE 14
HP GAS COMPRESSOR	P22	LD-3209-A	10	487	489	10"- - -086-	12"- - -030-JIB	12 - - -029-JIB	- - - -361- -	- - - -387- -	- - - -164- -	
LP GAS COMPRESSOR	P23	LD-3209	10	487	489	10"- - -087-	12"- - -030- -	12"- - -029- -	- - - -361- -	- - - -388- -	- - - -164- -	
EXP/FUEL GAS AREA	P29	LD-3205	6	465	465	6"- - -088-	8"- - -058-JIB-F	8"- - -059-JIB-F	- - - -356- -	- - - -389- -	- - - -158- -	
UNDERDECK SYSTEM DP LEVEL 3	P93	LD-3213-B	10	460	460	10"- - -089-	10"- - -341- F	10"- - -342- F	- - - -364- -			
EXPORT GAS COMPRESSOR	P24	LD-3206-B	8	462	461	8"- - -090-	12"- - -048-JIB	12"- - -050-JIB	- - - -355- -	- - - -391- -	- - - -160- -	
FIRE PUMP "A"	U12	LD-3202-A	3	478	480	3"- - -091-	4"- - -231-JIB-F	4"- - -244-JIB-F	- - - -366- -	- - - -392- -	- - - -151- -	
FIRE PUMP "B"	U24	LD-3202-B	3	477	478	3"- - -092-	4"- - -242- F	4"- - -238- F	- - - -367- -	- - - -393- -	- - - -152- -	
UQ NORTH SIDE	U91	LD-3203-A	8	469	468	8"- - -093-	8"- - ~~-239-~~ F Z3	8"- - ~~-234-~~ F Z3	- - - -368- -		- - - -153- -	
UQ EAST SIDE	U92	LD-3203-B	10	466	467	10"- - -094-	12"- - -241-JIB	12"- - -237-JIB	- - - -351- -		- - - -154- -	
UQ SOUTH SIDE	U93	LD-3203-C	10	471	471	10"- - -095-	10"- - -243-JIB-F	10"- - -246-JIB-F	- - - -370- -		- - - -155- -	
FIRE PUMP 'C'	U25	LD-3202-A	3	479	480	3"- - -345-	4"- - -231- F	4"- - -244- F	- - - -366- -	- - - -397- -	- - - -151- -	
FIRE PUMP 'D'	U13	LD-3202-B	3	478	477	3"- - -346-	4"- - -242- F	4"- - -238- F	- - - -367- -	- - - -398- -	- - - -152- -	
EMERGENCY GENERATOR 'A'	U21	LD-3203-A	3	469	468	3"- - -347-	8"- - -234- F	8"- - -239- F	- - - -368- -	- - - -399- -	- - - -153- -	
EMERGENCY GENERATOR 'B'	U17	LD-3203-C	3	471	470	3"- - -348-	10"- - -243- F	10"- - -246- F	- - - -370- -	- - - -400- -	- - - -155- -	
EXPORT GAS AREA	P14	LD-3212	8	464	481	8"- - -204-	10"- - -189- F	10"- - -056- F	- - - -359- -	- - - -418- -	- - - -166- -	
BOP DECK & DRILL FLOOR	D43	LD-3211-B	6	490	490	6"- - -159-	8"- - -163- F	8" - - -164- F	- - - -402- -	- - - - - -	- - - -170- -	

NOTES

1. THIS COVERAGE SHOWN IS TYPICAL ONLY, DELUGE SKIDS WILL FEED GENERAL SYSTEMS AND UNDERDECK SYSTEMS.
2. DELUGE VALVE SKID TO BE PROVIDED WITH AN ENCLOSURE AND HEATER FOR WINTERISATION THUS NO TRACING REQUIRED ON SKID.
3. DELETED
4. DISCHARGE OF LD-3201 IS VIA DEDICATED FOAM SKID LF-3403,(ALL LOCATED ON LQ ROOF)
5. FLUSHING POINT(S) REQUIRED FOR FIRE AREAS P04,U12,U13,U21,U24,U25,U17. PERMANENT Y TYPE STRAINERS
6. NOT REQUIRED FOR 'UQ' LER
7. SPOOL PIECE TO BE 1500mm.OR 5 X DIAMETER, WHICH EVER IS THE GREATER.
8. NO FIELD LOCAL RELEASE POINTS FOR DELUGE SYSTEMS SERVING : FA-U91, U92, U93.
9. NO AIR TRIGGER PIPEWORK ON DELUGE SYSTEMS SERVING : FA-P91, P92, P93, U91, U92, U93.D43
10. NO AUTO INHIBIT ON : FA-P91, P92, P93, U91, U92, U93.D43
11. NO PSL ON DELUGE SYSTEMS : P91, P92, P93, U91, U92, U93.D43
12. FOR ARRANGEMENT OF DELUGE DISTRIBUTION PIPING SEE RELEVANT FIRE PROTECTION LAYOUT
13. WEEP HOLES TO BE SITE DRILLED AT LOW POINTS TO ENSURE SYSTEM IS FULLY SELF DRAINING AFTER USE.
14. THIS DELUGE SKID LD-3206A WILL ALSO PROTECT TELFORD METHANOL PACKAGE AND ROCHELLE CHEMICAL INJECTION AND METHANOL FACILITIES. ALCOHOL RESISTANT FOAM WILL BE INDUCED DOWNSTREAM OF DELUGE VALVE SKID. LINE No.1 AND 5 TO BE EXTENDED AS PER DESIGN.
15. THIS DELUGE SKID LD-3210A WILL ALSO PROTECT TELFORD SEPARATOR (FIRE AREA P20), TELFORD CORIOLIS METERING AREA AND ROCHELLE SEPARATOR. AFFF WILL BE INDUCED DOWNSTREAM OF DELUGE VALVE SKID. LINE No.1 AND 5 TO BE EXTENDED AS PER DESIGN.
16. TIE-IN POINT IS INDICATIVE ONLY. REFER TO FIRE PROTECTION STUDIES FOR EXACT LOCATIONS.
17. TIE-IN POINT IS INDICATIVE ONLY. REFER TO PNEUMATIC HEAT DETECTOR LAYOUT FOR EXACT LOCATION.
18. THE FOLLOWING RESTRICTION ORIFICE PLATES ARE INSERTED IN LINE No. 6"-WF-32-085-X1B
    RO-32851
    RO-32852
    FOR LOCATIONS OF PLATES REFER TO HYDRAULIC ISOMETRIC DRG. NO. SK-T363-L-15-003 (REV A)
19. FLEXIBLE HOSES IN MOVING JOINT BETWEEN BRIDGES (NORTH & SOUTH) AND UQ PLATFORM. THIS RELATES TO BRIDGES DELUGE SETS. SEE DETAILS A & B.

ONLY ACTIVATED TRACE HEATING IS SHOWN ON P & ID, ALL OTHER INSTALLED TRACE HEATING IS NOT ACTIVATED AND NOT SHOWN ON P & ID.

FOR ORIGINAL DESIGN APPROVAL SIGNATURES SEE ARCHIVED DRAWING AT REV 0

REFERENCE DRAWINGS

DRG.No.	REV	TITLE
FW-T000-LC-PD-0003-03	CD	P & ID DELUGE PACKAGE INSTRUMENTATION

REV	REASON FOR ISSUE	DATE	DRN.	CKD.	BY ENG	ENG CKD.	L.E. APP'D	CNOOC APP'D
10	AS BUILT AS COMMISSIONED FOR DO 256	15/7/95		GWM	JN			
4	REVISED TO LATEST INFORMATION	26/6/93		KM	HH			KTL
3	AS BUILT							
2	REVISED APPROVED FOR CONSTRUCTION (INC DCP 5000/ AH 1054)	16/1/92	TT	GRG	HH			
1	APPROVED FOR CONSTRUCTION (INC DCP 5000/238)	17.10.91	CAD	RAP	HH		AW	KTL
0	APPROVED FOR CONSTRUCTION	7.6.91	JRB	RAP	HH	JS	AW	KTL

REV	REASON FOR ISSUE	DATE	DRN.	CKD.	BY ENG	ENG CKD.	L.E. APP'D	CNOOC APP'D
FD	APPROVED FOR FINAL DESIGN	28.2.91	RB	RAP	HH	JS	AW	KTL
Z3	AS-BUILT FOR SIC0103	18.01.22	TPK	I K	TPK	TF	JL	TR
Z2	AS-BUILT FOR SIC0062	21.01.19	DD	ppTF	ppTF	JL	JL	TR
Z1	AS BUILT AS PER SEQ1591	22.01.16	TW	LM	LM	AH	AH	TR
12	AS BUILT FOR DO-438-06	24/3/99	PBD	GD / KN				
11	AS BUILT FOR TELFORD	31.7.97	AD				KJH	

THIS IS A C.A.D. PRODUCED DRAWING AND SHOULD NOT BE MANUALLY MODIFIED

SCOTT

Worley energy | chemicals | resources

TITLE
PIPING AND INSTRUMENT DIAGRAM
FIREWATER
DELUGE PACKAGES

DRAWING No. SCOTT-FW-T000-LC-PD-0003-01 | Z3 | NONE

PROJECT	ORIG	AREA/MOD	DISC	TYPE	SEQ. No.	SHT.	REV	SCALE