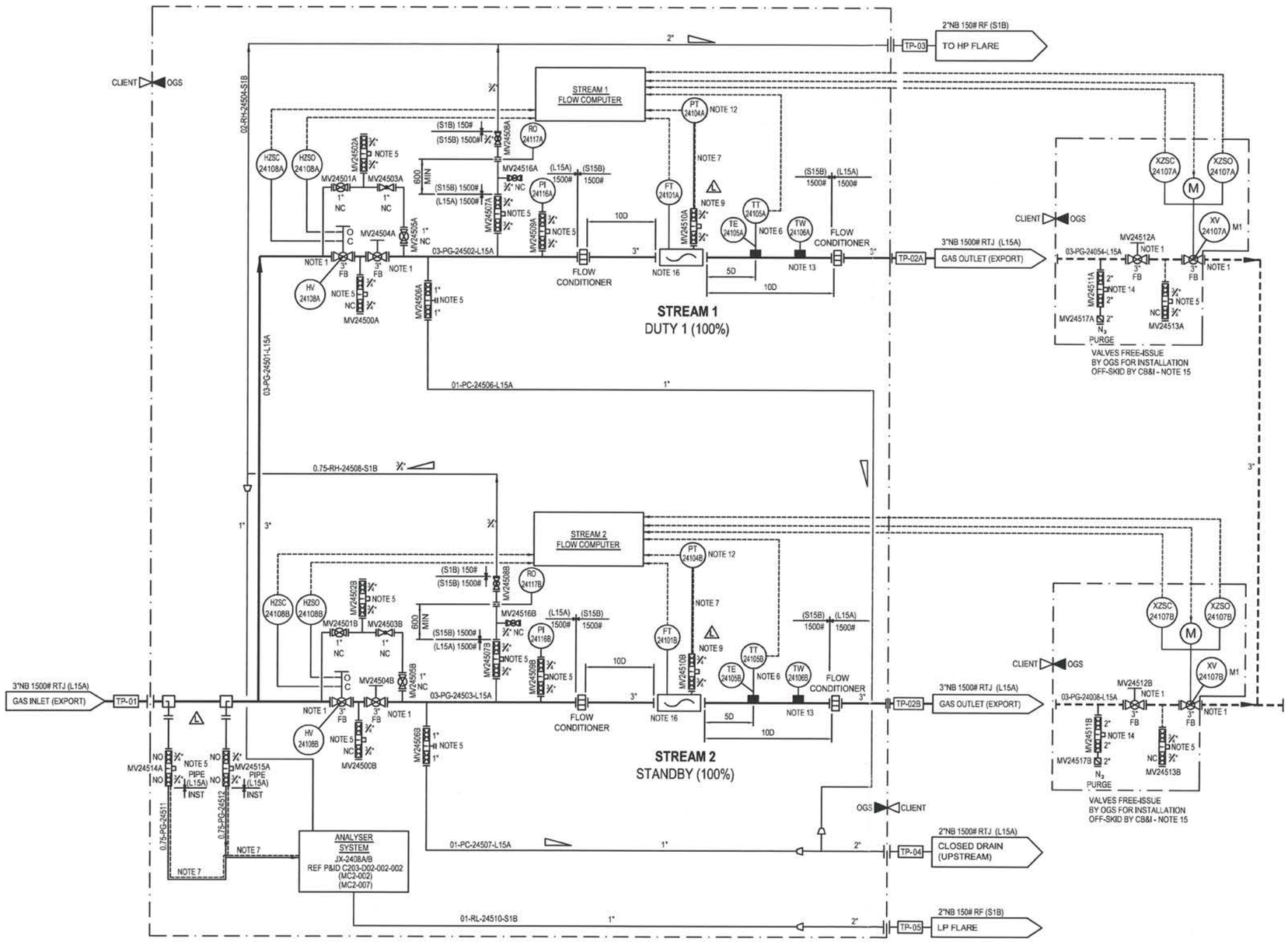

TERMINATION SCHEDULE

TP No.	SIZE	CLASS	DESCRIPTION	PIPING CLASS
TP-01	3"NB	1500# RTJ	GAS INLET (EXPORT)	L15A
TP-02A/B	3"NB	1500# RTJ	GAS OUTLET (EXPORT)	L15A
TP-03	2"NB	150# RF	TO HP FLARE	S1B
TP-04	2"NB	1500# RTJ	CLOSED DRAIN	L15A
TP05	2"NB	150# RF	LP FLARE	S1B

GAS METERS

EQUIPMENT No: X-2401	
OPERATING TEMPERATURE / °C	40 to 49.9
OPERATING PRESSURE / bar(g)	121 - 156
DESIGN TEMPERATURE / °C	-46 to +70
DESIGN PRESSURE / bar(g)	172.4
DESIGN FLOW / Kg/hr	0 - 22735
DESIGN FLOW / MMSCFD	0 - 20

NOTES:
1. VALVES TO BE FULL BORE BALL, HUB ENDED.
2. P&ID LEGEND AS PER CLIENT DOCUMENTS 168397-100-PR-PI-0001-01 to 168397-100-PR-PI-0012-01.
3. REMOVED.
4. PIPING AND FLANGE MATERIAL IN ACCORDANCE WITH SPECIFICATION L15A.
5. MODULAR DOUBLE BLOCK & BLEED VALVES.
6. SURFACE MOUNTED TEMPERATURE INSTRUMENT. (TO BE INSULATED).
7. IMPULSE TUBING TO HAVE TRACE HEATING AND INSULATION.
8. CLIENT TO ADVISE LINE NUMBERS.
9. ULTRASONIC METER PROVIDED WITH INTEGRAL 3/4" RTJ PRESSURE TAPPING.
10. REF. GENERAL ARRANGEMENT DRAWING C203-M01-001-001 (MB1-001).
11. REF. SPECIFICATION FOR GAS EXPORT/IMPORT METERING 168397-100-IN-SP-0005.
12. LOCATED IN ANALYZER CUBICLES.
13. CLAMP ON PAD FOR TEMPERATURE CHECK MEASUREMENT.
14. MODULAR DB&B VALVE COMPLETE WITH SEPARATE NRV.
15. VALVES TO BE FREE ISSUE BY OGS FOR INSTALLATION BY CB&I IN LOCAL PIPEWORK.
16. INLET/OUTLET METERING SPOOLS ST.ST. TO SPECIFICATION S15B.
17. FOR LP/HP FLARE FLOW RATES SEE DOC. IG1-005 RESTRICTION ORIFICE/ BLOW DOWN CALCULATIONS.

CUSTOMER	OGS	DATE	DESCRIPTION OF REVISION	PREP	CHKD	APPRD
12	L	25APR12	AS BUILT	JWB	BW	MSI
11	K	17APR12	RE-ISSUED FOR APPROVAL	DC	BW	MSI
10	J	29MAR12	RE-ISSUED FOR APPROVAL	TT	BW	MSI
09	I	07FEB12	RE-ISSUED FOR APPROVAL	TT	BW	IS
08	H	28DEC11	ISSUED FOR APPROVAL	TT	BW	IS
07	G	24NOV11	RE-ISSUED FOR APPROVAL	TT	BW	IS
06	F	20OCT11	RE-ISSUED FOR APPROVAL	TT	BW	IS
05	E	27SEP11	MODIFIED AS REQUESTED	TT	BW	IS
04	D	19SEP11	MODIFIED AS REQUESTED	TT	BW	IS
03	C	15SEP11	MODIFIED AS REQUESTED	TT	IS	BW
02	B	07SEP11	RE-ISSUED FOR APPROVAL	TT	BW	IS
01	A	02AUG11	ISSUED FOR APPROVAL	BW	IS	IS

OGS
OIL & GAS SYSTEMS LIMITED
GEMINI HOUSE THE BUSINESS PARK
ELY CAMBRIDGE CB7 4EA ENGLAND
Phone : 44 (0)1353 666640
Fax : 44 (0)1353 666650
Website : www.ogsl.com

SCALE	NTS
ORIGINAL SIZE	A1
SHEET	01 (NEXT SHEET -)

CONTRACT NUMBER	DOC. CODE	DOC. NO.	SHEET	REVISION
C203	D02	001	001	L

OGS SUB-SUPPLIER DETAILS

SUB-SUPPLIER	-
DRAWING No.	-
REVISION No.	-

P&ID 2x 100% Custody Transfer
Ultrasonic Gas Metering System
(Bi Directional) TAG. X-2401

Nexen Petroleum (U.K.) Limited
Golden Eagle Area Development

VENDOR : OGS

EQUIPMENT TITLE : Ultrasonic Gas Metering System

EQUIPMENT TAG NO(S) : X-2401

GEAD Vendor Document Number

Purchase Order Number	Doc Type Code	Seq. No	Rev.	DATE
168397-200-PO-6008-	MC2	001	12	17.4.12

INCLUDES DOCUMENT CODES : *** TOTAL SHEETS : 1

DISTRIBUTION LIST	QUANTITY
CLIENT	1E
TOTEC	1E

F	Final (accepted) – manufacturing may proceed.
A	Qualified Release – revise and re-submit. Manufacturing may proceed subject to incorporation of comments.
R	Rejected – revise and re-submit. Manufacturing may not proceed.
I	Accepted for information only.

Review of Vendor documents does not relieve Vendor of the responsibility for correctness under the Purchase Order. Permission to proceed does not constitute acceptance of design, detail and calculations, test methods or materials developed or selected by the Vendor and does not relieve the Vendor from fu compliance with the Purchase Order or any other obligations, nor detract from any of the Purchaser's rights.

Engineer : STOCHMANNIE Date : 27/04/12