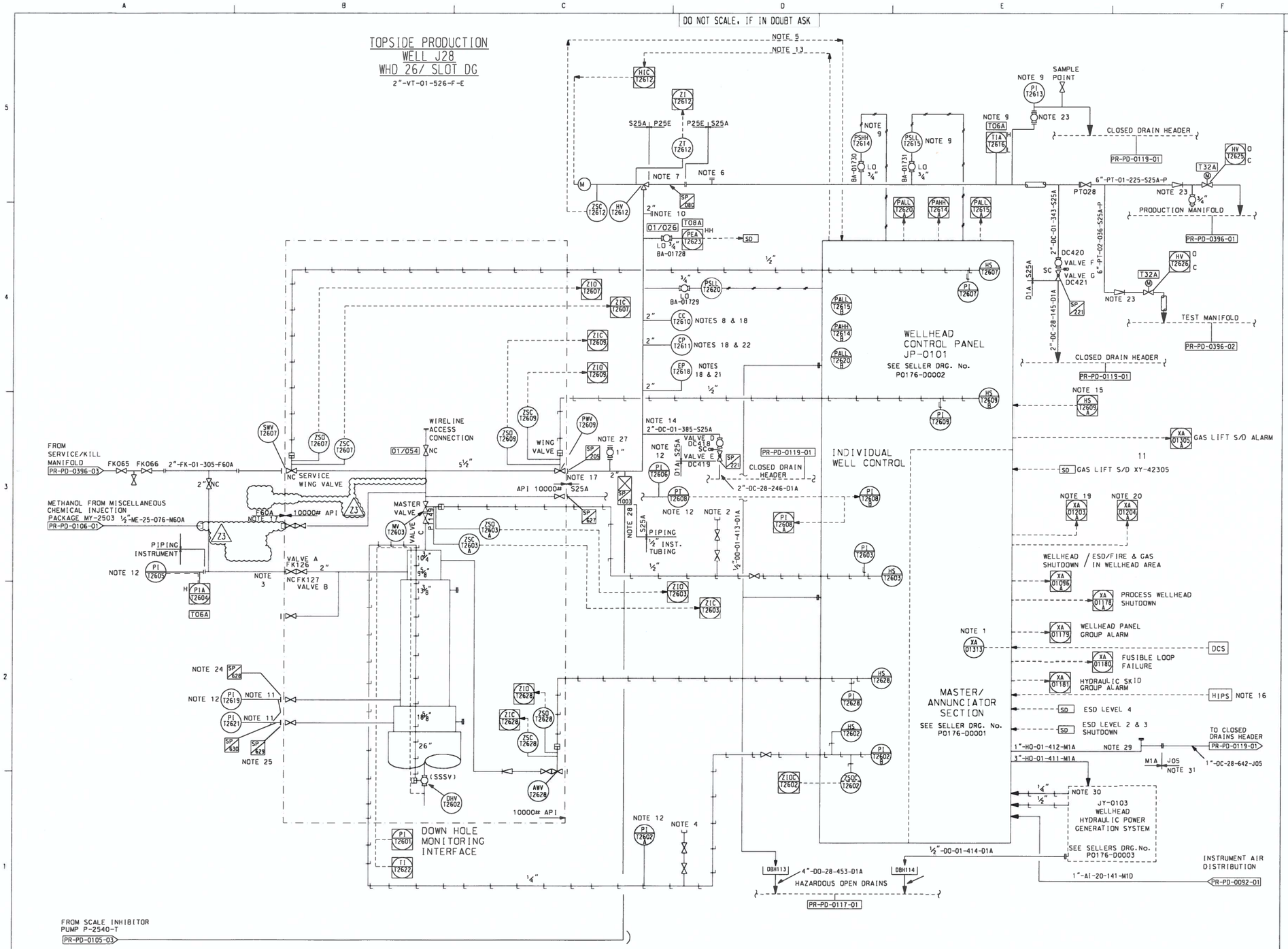

NOTES

1. MALFUNCTION ALARM. DERIVED FROM DCS. IS INITIATED FOR EVERY PILOT STATUS ALARM (PALL T2615A, PAHH T2614A, PALL T2620A) AND CORRESPONDING TAGS FOR ALL 28 WELLHEADS.
2. WIRELINE CONTROL CONNECTION POINT (414 BARG)
3. CASING ANNULUS MONITORING.
4. WIRELINE CONTROL CONNECTION POINT (690 BARG)
5. WING AND MASTER VALVE WILL NOT OPEN UNLESS CHOKE VALVE IS CLOSED.
6. MULTI-PURPOSE CHEMICAL INJECTION CONNECTION.
7. EROSION PROTECTION. REINFORCED OR CLADDED SPOOL PIECE.
8. CORROSION COUPON ASSEMBLY. THIS NEEDS TO BE ACCESSED BY THE RETRIEVAL TOOL AND LOCATED AT BEND OUTLET IN VERTICAL SECTION OF FLOWLINE.
9. INSTRUMENT CONNECTIONS ETC. TO BE ON TOP OF LINE OR VERTICAL RUN TO AVOID SAND BLOCKAGE.
10. CONNECTION FOR FUTURE INSTALLATION OF ULTRASONIC SAND MONITORING PROBES.SAND PROBES TO HAVE STRAIGHT LENGTHS OF 10D UPSTREAM AND 5D DOWNSTREAM.
11. ANNULUS MONITORING CASING/CASING.
12. MOUNTED ON LOCAL WIRELINE PANEL.
13. CLOSES CHOKES ON WELLHEAD SHUTDOWN VIA DCS.
14. CLOSE DRAIN LINE TAKE OFF IS FROM THE LOW POINT OF THE HEADER.
15. DCS PERMISSIVE TO ALLOW LOCAL OPERATOR TO OPEN INDIVIDUAL WING VALVES. PERMISSIVE SIGNAL IS AVAILABLE FOR 5 MINUTES FROM DCS INITIATION.
16. SHUTS DOWN ALL TOPSIDE WING AND MASTER VALVES AND INITIATES CLOSURE OF CHOKE VALVES VIA DCS.
17. MATING FLANGES TO BE 10000# API.
18. CORROSION COUPONS. CORROSION PROBES AND SAND EROSION PROBES ALL HAVE 2" ACCESS FITTINGS (FLAREWELD TYPE). CONNECTIONS TO BE SUPPLIED BY INSTRUMENTS.
19. SYSTEM IN OVERRIDE MODE FOR SSSV EQUALISATION.
20. SYSTEM IN OVERRIDE MODE FOR FLOWLINE VENTING.
21. CONNECTION FOR THE INTRUSIVE SAND EROSION PROBE TO HAVE STRAIGHT LENGTHS OF 10D UPSTREAM & 5D DOWNSTREAM AND ALSO BE LOCATED IN THE VERTICAL SECTION OF THE FLOWLINE.
22. CORROSION PROBE IS TO BE LOCATED AT THE BOTTOM OF THE HORIZONTAL SECTION OF THE FLOWLINE AND DOES NOT NEED TO BE RETRIEVED UNDER LINE PRESSURE.
23. NO TAG NUMBER.
24. 5000 PSI API RATING.
25. 3000 PSI API RATING.
26. DELETED.
27. CONNECTION FOR FUTURE SCALE INHIBITOR SUPPLY.
28. SCALE INHIBITOR INJECTION QUILL WITH INTERNAL CHECK VALVE & DOUBLE BLOCK & BLEED.
29. COMMON WELLHEADS HYDRAULIC RETURN LINE 1"-HO-01-412-M1A RE-ROUTED TO CLOSED DRAINS HEADER.
30. REFER TO P&ID SCOTT-AK-0000-PR-PD-0397-09
31. THE USE OF 1"NB TUBING (LINE SIZE OUTWITH PLATFORM SPECIFICATION) HAS BEEN AGREED WITH CLIENT REF. SEQ1508-PD-001

REFERENCE DRAWINGS

DRG.No.	REV	TITLE

REV	REASON FOR ISSUE	DATE	DRN.	CKD.	BY ENG	ENG CKD.	L.E. APP'D	CNOOC APP'D
Z3	AS BUILT FOR 21030954	7/3/20	pp	bb	hm	hm	pl	pl	M
Z2	AS BUILT FOR SIC0036	23/05/17	LM	LM	LM	RS	RS	
Z1	AS BUILT FOR SIC0030	27/03/17	DD	SG	SG	AH	AH	TR
12	AS BUILT PER SEQ1508	28/09/10	KJ	KR	EM	JD	MU	TR
11	AS BUILT PER SEQ1233 & SEQ1222	/07	VM	05/06 EC	EC	AL	AL	SC
10	AS BUILT UNDER S1074 ONLY	26/05/05	KM	TSB	SH	TSB		

REV	REASON FOR ISSUE	DATE	DRN.	CKD.	BY ENG	ENG CKD.	L.E. APP'D	CNOOC APP'D

cnooc

THIS IS A C.A.D. PRODUCED DRAWING AND SHOULD NOT BE MANUALLY MODIFIED

SCOTT | Worley energy | chemicals | resources

TITLE PIPING & INSTRUMENT DIAGRAM
TOPSIDE GAS LIFT WELLHEAD
WELL J28/ SLOT DG WHD 26

DRAWING No. SCOTT-WG-0000-PR-PD-0395.26 | Z3 | NTS

PROJECT | ORG | AREA/MOD | DISC | TYPE | SEQ. No. | SHT. | REV | SCALE