QTY	MAKE FROM / MATERIAL	WT KG	QTY	SYMBOL	DESCRIPTION	PT

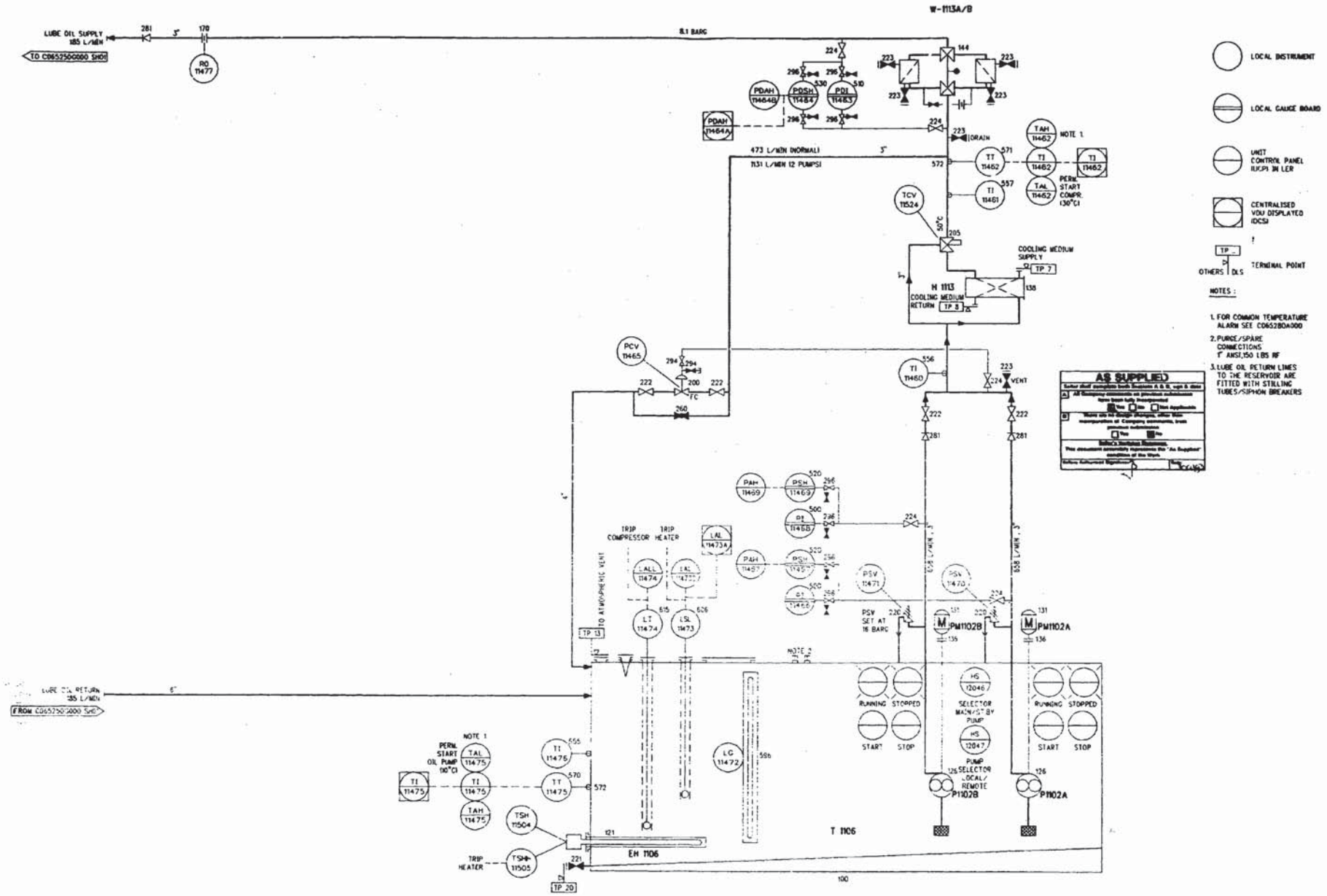

REV	DATE	BY	DD CHKD	ENG. CHECK	LD APP'D	DESCRIPTION

REVISIONS

DRAWING NO.	TITLE

REFERENCE DRAWINGS

DRAWING STATUS

THIS IS A RASTER/VECTOR HYBRID C.A.D. DRAWING AND MUST NOT BE MANUALLY MODIFIED.

A 1	NAME	DATE
DRAWN BY		
DD CHECKED BY		
ENG. CHECK BY		
ENG. APP'D BY		
HESS APPROVAL		
JOB No.		
SCALE		
CONTRACTOR		

HESS
AMERADA HESS LIMITED
Scott House,
Haverdyce Road-Altens,
Aberdeen AB1 4LE
Tel: (0224) 243000
Telex: 730621
Fax: 243212

TITLE

Compressor Package Lube Oil and Seal Gas Schematic CY1101A

INSTALLATION	DRAWING NUMBER	REV
	SCOTT-P0002-D-1007-00	9