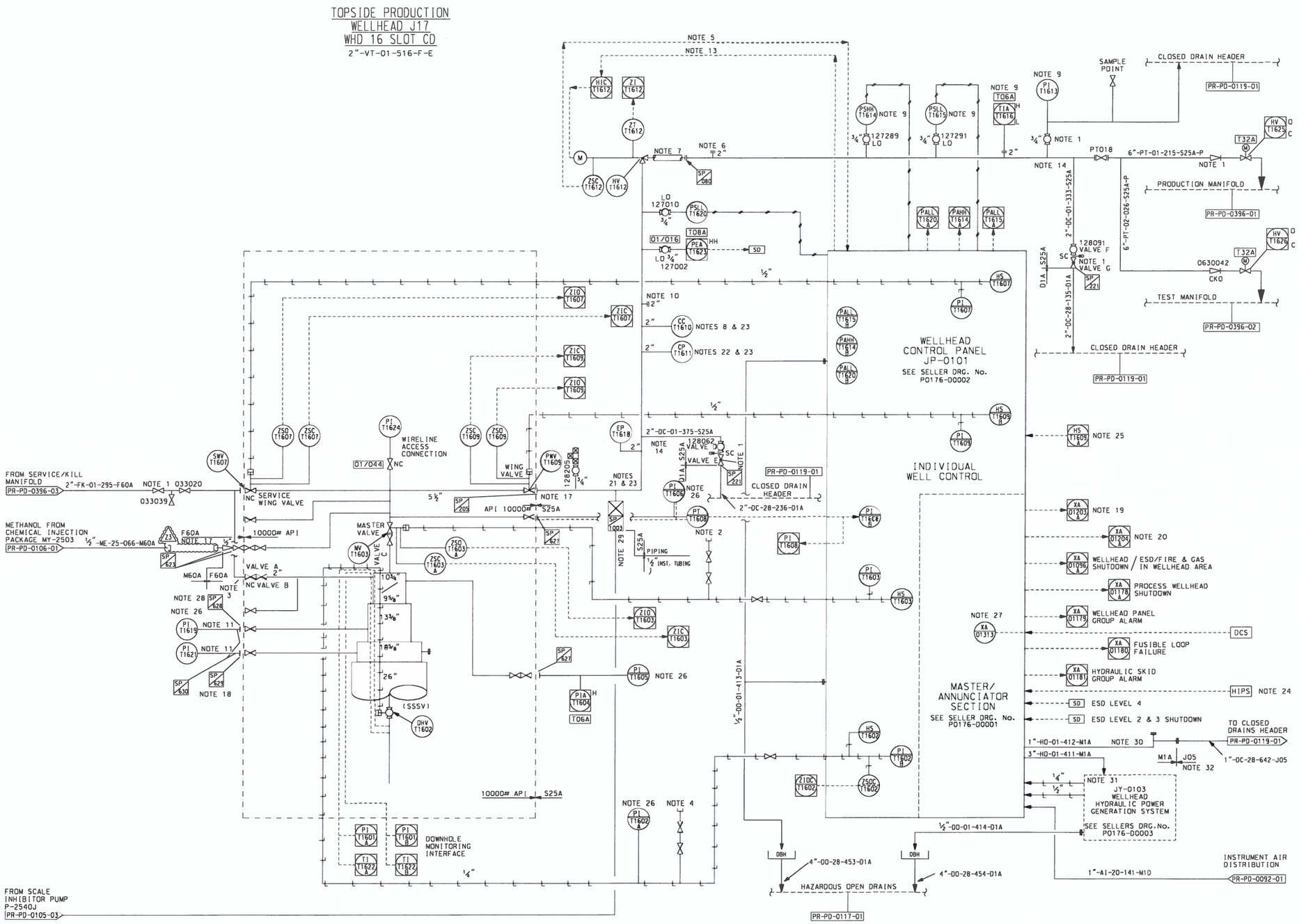

NOTES

1. NO TAG NUMBER.
2. WIRELINE CONTROL CONNECTION POINT (414 BARG)
3. CASING ANNULUS MONITORING.
4. WIRELINE CONTROL CONNECTION POINT (690 BARG)
5. WING AND MASTER VALVE WILL NOT OPEN UNLESS CHOKE VALVE IS CLOSED
6. MULTI PURPOSE CHEMICAL INJECTION CONNECTION.
7. EROSION PROTECTION. REINFORCED OR CLADDED SPOOL PIECE
8. CORROSION COUPON ASSEMBLY. THIS NEEDS TO BE ACCESSED BY THE RETRIEVAL TOOL AND LOCATED AT BEND OUTLET IN VERTICAL SECTION OF FLOWLINE
9. INSTRUMENT CONNECTIONS ETC.TO BE ON TOP OF LINE OR VERTICAL RUN TO AVOID SAND BLOCKAGE.
10. CONNECTION FOR FUTURE INSTALLATION OF ULTRASONIC SAND MONITORING PROBES.SAND PROBES TO HAVE STRAIGHT LENGTHS OF 10D UPSTREAM AND 5D DOWNSTREAM
11. ANNULUS MONITORING CASING/CASING.
12. DELETED
13. CLOSES CHOKES ON WELLHEAD SHUTDOWN VIA DCS.
14. CLOSE DRAIN LINE TAKE OFF IS FROM THE LOW POINT OF THE HEADER.
15. DELETED.
16. DELETED.
17. MATING FLANGES TO BE 10000# API
18. 3000 PSI API RATING.
19. SYSTEM IN OVERRIDE MODE FOR SSSV EQUILISATION
20. SYSTEM IN OVERRIDE MODE FOR FLOWLINE VENTING
21. CONNECTION FOR THE INTRUSIVE SAND EROSION PROBE TO HAVE STRAIGHT LENGTHS OF 10D UPSTREAM & 5D DOWNSTREAM AND ALSO BE LOCATED IN THE VERTICAL SECTION OF THE FLOWLINE
22. CORROSION PROBE IS TO BE LOCATED AT THE BOTTOM OF THE HORIZONTAL SECTION OF THE FLOWLINE AND DOES NOT NEED TO BE RETRIEVED UNDER LINE PRESSURE
23. CORROSION COUPONS, CORROSION PROBES AND SAND EROSION PROBES ALL HAVE 2" ACCESS FITTINGS (FLAREWELD TYPE). CONNECTIONS TO BE SUPPLIED BY INSTRUMENTS
24. SHUTS DOWN ALL TOPSIDE WING AND MASTER VALVES AND INITIATES CLOSURE OF CHOKE VALVES VIA DCS
25. DCS PERMISSIVE TO ALLOW LOCAL OPERATOR TO OPEN INDIVIDUAL WING VALVES. PERMISSIVE SIGNAL IS AVAILABLE FOR 5 MINUTES FROM DCS INITIATION
26. MOUNTED ON LOCAL WIRELINE PANEL
27. MALFUNCTION ALARM, DERIVED FROM DCS, IS INITIATED FOR EVERY PILOT STATUS ALARM (PALL T1615A, PAHH T1614A, PALL T1620A) AND CORRESPONDING TAGS FOR ALL 28 WELLHEADS
28. 5000 PSI API RATING.
29. SCALE INHIBITOR INJECTION QUILL WITH INTERNAL CHECK VALVE & DOUBLE BLOCK & BLEED.
30. COMMON WELLHEADS HYDRAULIC RETURN LINE 1"-HO-01-412-M1A RE-ROUTED TO CLOSED DRAINS HEADER.
31. REFER TO P&ID SCOTT-AK-0000-PR-PD-0397-09
32. THE USE OF 1"NB TUBING (LINE SIZE OUTWITH PLATFORM SPECIFICATION) HAS BEEN AGREED WITH CLIENT REF. SEQ1508-PD-001

REFERENCE DRAWINGS

DRG.No.	REV	TITLE

REV	REASON FOR ISSUE	DATE	DRN.	CKD.	BY ENG	ENG CKD.	L.E. APP'D	CNOOC APP'D
Z3	AS BUILT FOR 21030954	2/3/19	[illegible]	[illegible]	[illegible]	[illegible]	[illegible]	[illegible]
Z2	AS BUILT FOR SIC0037	23.05.17	LM	LM	LM	RS	RS	TR
Z1	AS BUILT FOR SIC0030	27/02/17	DD	SG	SG	AH	AH	TR
12	AS BUILT PER SEQ 1508 ONLY	28/09/10	KJ	KR	EM	JD	MU	TR
11	AS BUILT PER SEQ 1222 ONLY	24/01/08	VM	EC	EC	AL	AL	GL
10	AS BUILT UNDER SEQ-1084	19/11/03	IAC	SH	AH	DR		

REV	REASON FOR ISSUE	DATE	DRN.	CKD.	BY ENG	ENG CKD.	L.E. APP'D	CNOOC APP'D

cnooc

THIS IS A C.A.D. PRODUCED DRAWING AND SHOULD NOT BE MANUALLY MODIFIED

SCOTT

Worley energy | chemicals | resources

TITLE: PIPING & INSTRUMENT DIAGRAM TOPSIDE PRODUCTION WELL J17/SLOT CD, WHD 16

DRAWING No. SCOTT-WG-0000-PR-PD-0395.16

PROJECT	ORG	AREA/MOD	DISC	TYPE	SEQ. No.	SHT.	REV	SCALE
							Z3	NONE