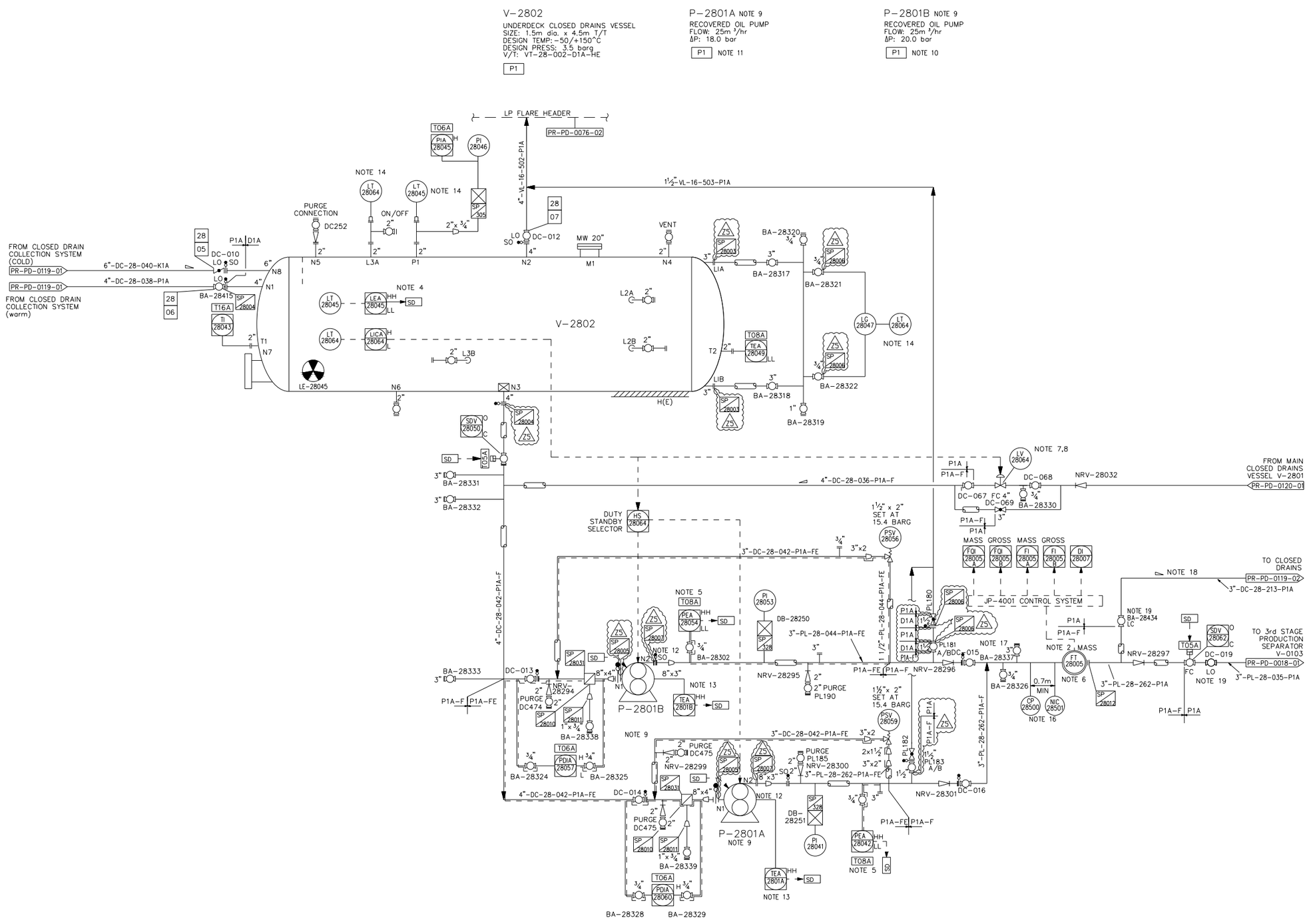

NOTES

1. DELETED.
2. INSULATE TO HIGH POINT OF LINE.
3. DELETED.
4. HIGH LEVEL IN VESSEL TO CLOSE SDV 28050 AND ESD VALVE ON LIQUID OUTLET FROM HP FLARE DRUM V-1601.
5. PEA-28042 AND PEA-28054 TO BE ACTIVE ONLY WHEN PUMP IS RUNNING.
6. FT 28005 TO BE PROVIDED BY JP-4001 SELLER.
7. SLOW ACTING VALVE.
8. LOCAL MILLI-AMPERE INDICATOR TO BE INSTALLED ADJACENT TO VALVE.
9. PUMPS P-2801A/B ARE PROGRESSIVE CAVITY POSITIVE DISPLACEMENT TYPES WITH MANUAL SPEED ADJUSTER
10. PUMP IS RATED FOR DP OF 20 BAR BUT A DP OF 15 BAR ONLY IS REQUIRED.
11. PUMP IS RATED FOR DP OF 18 BAR BUT A DP OF 15 BAR ONLY IS REQUIRED.
12. PUMP DISCHARGE FLANGE RATED TO 300LB
13. HIGH TEMPERATURE TRIP ON MOTOR CASING FOR LOW FLOW PROTECTION.
14. REDUNDANT LEVEL TRANSMITTER.
15. DELETED.
16. CORROSION COUPON & BIO PROBE FOR CORROSION MONITORING.
17. TIE-IN POINT FOR TEMPORARY CLOSED DRAINS PUMPS.
18. LINE IS FREE DRAINING WITH NO POCKETS AND HAS A MINIMUM SLOPE OF 1:100.
19. VALVE DC-019 TO BE LOCKED CLOSED (LC) PRIOR TO OPENING VALVE BA-28434. VALVE BA-28434 TO BE LOCKED CLOSED PRIOR TO OPENING VALVE DC-019. THIS IS A TEMPORARY MEASURE UNTIL VALVE INTERLOCK IS INSTALLED.

FOR APPROVAL SIGNATURES SEE ARCHIVED DRAWING AT REV 0

ONLY ACTIVATED TRACE HEATING IS SHOWN ON P & ID, ALL OTHER INSTALLED TRACE HEATING IS NOT ACTIVATED AND NOT SHOWN ON P & ID.

REFERENCE DRAWINGS

DRG.No.	REV	TITLE
DCP 5000 - 729 (EPJ-0140)		
DCP 5000-744 ARN 3946 (EP 2931)		
DCP 5000 - AH 1054		

REV	REASON FOR ISSUE	DATE	DRN.	CKD.	BY ENG	ENG CKD.	L.E. APP'D	CNOOC APP'D
21	AS BUILT AS PER SEQ1493	05.02.13	KD	SAW	TR	PA	TR	TR
20	AS BUILT PER SEQ1487	10.02.10	DP	EM	EM	AW	NW	GL
19	AS BUILT PER SEQ-1300 & SEQ-1211 ONLY	21.11.07	VM	MU	MU	AL	AL	GL
18	AS BUILT PER S1136	16.03.06	FR	CS	CS	AL	AL	SC
17	UPDATED TO REFLECT SEQ-1088	30.05.05	KM	TSB		SH	SC	TSB
16	UPDATED TO REFLECT SEQ-1080	12.12.03	GPG			BH	SAS	

REV	REASON FOR ISSUE	DATE	DRN.	CKD.	BY ENG	ENG CKD.	L.E. APP'D	CNOOC APP'D
Z5	AS BUILT FOR SEQ1669	13.04.21	DR	SM	SM	TF	JL	TR
Z4	AS BUILT FOR SMOC1860	03.11.17	DD	LM	LM	SB	SB	TR
Z3	AS BUILT FOR SMOC1860	06.01.17	DD	LM	LM	AH	AH	TR
Z2	AS BUILT FOR SMOC1860	21.10.16	LM	LM	LM	AH	AH	TR
Z1	AS BUILT FOR SEQ1669	11.02.16	DD	LM	LM	AH	AH	TR
22	AS BUILT PER ADHOC	09.08.13	KD	SAW	DR	TR	TR	TR

THIS IS A C.A.D. PRODUCED DRAWING AND SHOULD NOT BE MANUALLY MODIFIED

Worley energy | chemicals | resources

TITLE
PIPING AND INSTRUMENT DIAGRAM
UNDERDECK CLOSED DRAINS VESSEL

DRAWING No.
SCOTT-FW-0000-PR-PD-0121-01

PROJECT	ORIG	AREA/MOD	DISC	TYPE	SEQ. No.	SHT.	REV	SCALE
							Z5	NTS