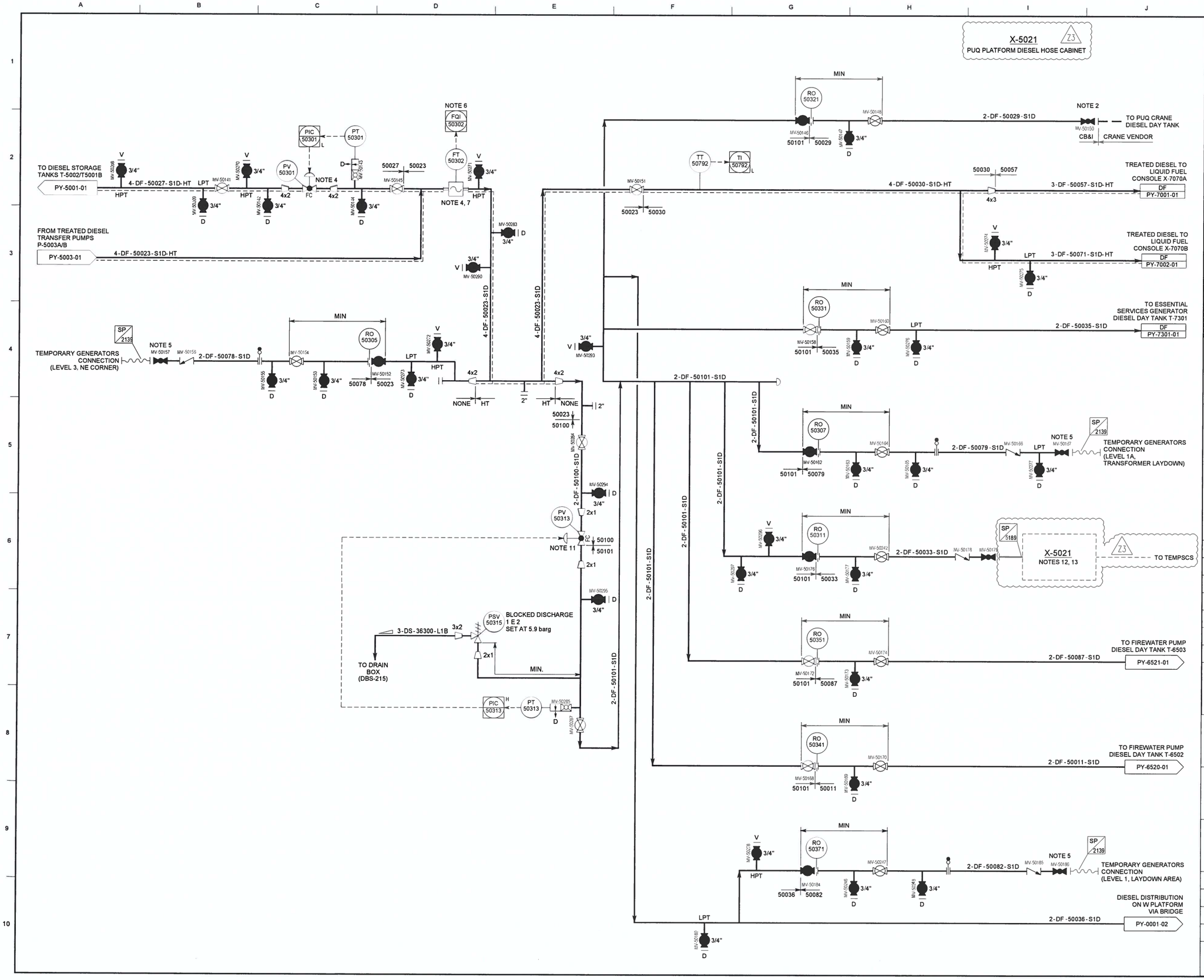

NOTES

REFER TO LEGEND SHEETS 168397-100-PR-PI-0001 TO 0012 FOR DETAILS OF PIPING CLASS, INSULATION, EQUIPMENT TYPES, INSTRUMENT DETAILS, VALVES AND SPECIFIC HOOK-UP REQUIREMENTS.

1. DELETED.
2. CONNECTION FOR CRANE'S HOSE PIPE TO THE DIESEL DAY TANK.
3. DELETED. Z3
4. PV-50301 AND FT-50302 TO BE LOCATED AT THE 47m ELEVATION NEAR THE MAIN GENERATOR PACKAGES.
5. AFTER THE TEMPORARY GENERATOR IS REMOVED ATTACH A BLIND FLANGE TO GLOBE VALVE.
6. FQI-50302 MEASURES USED DIESEL AND CONTINUOUS SPILLBACK FROM UPSTREAM OF THE LIQUID FUEL CONSOLES AND INTERMITTENT SPILLBACK FROM WITHIN THE POWER GENERATION ENCLOSURES. METER IS REQUIRED FOR ENVIRONMENTAL MANAGEMENT.
7. FLOWMETER TO HAVE MINIMUM STRAIGHT LENGTHS AS SPECIFIED BY INSTRUMENT GROUP.
8. REQUIREMENTS FOR FLANGE GUARDS (COALESCING TYPE) TO BE ADDED TO DIESEL LINES (DF) OPERATING AT 2 BARG OR HIGHER ARE SHOWN IN 168397-200-SA-RP-0009.
9. DELETED.
10. DELETED. Z3
11. VALVE HELD CLOSED BY SOFTWARE LOGIC WHEN BOTH TREATED DIESEL TRANSFER PUMPS P-5003A/B ARE NOT RUNNING TO PREVENT PRESSURE SPIKE AT PUMP START-UP LIFTING PSV-50315. AFTER EXPIRY OF TIMER (15 SEC CONFIGURABLE) AFTER PUMP START, AND PT-50301 <=4.5 BARG (CONFIGURABLE), VALVE REVERTS TO AUTO CONTROL.
12. CABINET CONSISTS OF A HOSE REEL AND DISPENSER TO SUPPLY TEMPSCS.
13. BOTTOM OF CABINET SHALL BE SEALED AND PROVIDED WITH SUFFICIENT CAPACITY TO HOLD THE FULL VOLUME OF THE HOSE IN THE EVENT OF HOSE LEAKAGE. Z3

REV	DATE	DESCRIPTION	DRN	CHK	APP	CLT
Z2	19/06/2018	AS-BUILT FOR GMOC0226	JL	LM	JL	TR
Z1	22/08/2014	AS BUILT INC. RN 03 - 07	JPN	JG	JG SH	JM
1	16/05/2012	REVISED FOR CONSTRUCTION	AA	DC	RJD IV	SA
0	11/01/2012	AFC INC. RN 02	AA	DC	RJD IV	SA
D2	26/10/2011	REVISED FOR DESIGN INC. RN 01	AA	DC	RJD IV	SA
Z3	13/12/22	AS-BUILT FOR GMOC0496	TPK	TF	TF	

cnooc

Golden Eagle
Golden Eagle Area Development

Worley
energy | chemicals | resources

TITLE: PIPING & INSTRUMENT DIAGRAM DIESEL DISTRIBUTION PUQ PLATFORM

SCALE (A1): NTS

ASSAI No: PR08PU0080

CONTRACT No: 168397

CLIENT CONTRACT No: GEA-CT-CON-00808

DRAWING No. 168397 - 100 - PR - PY - 5011 - 01

REV Z3