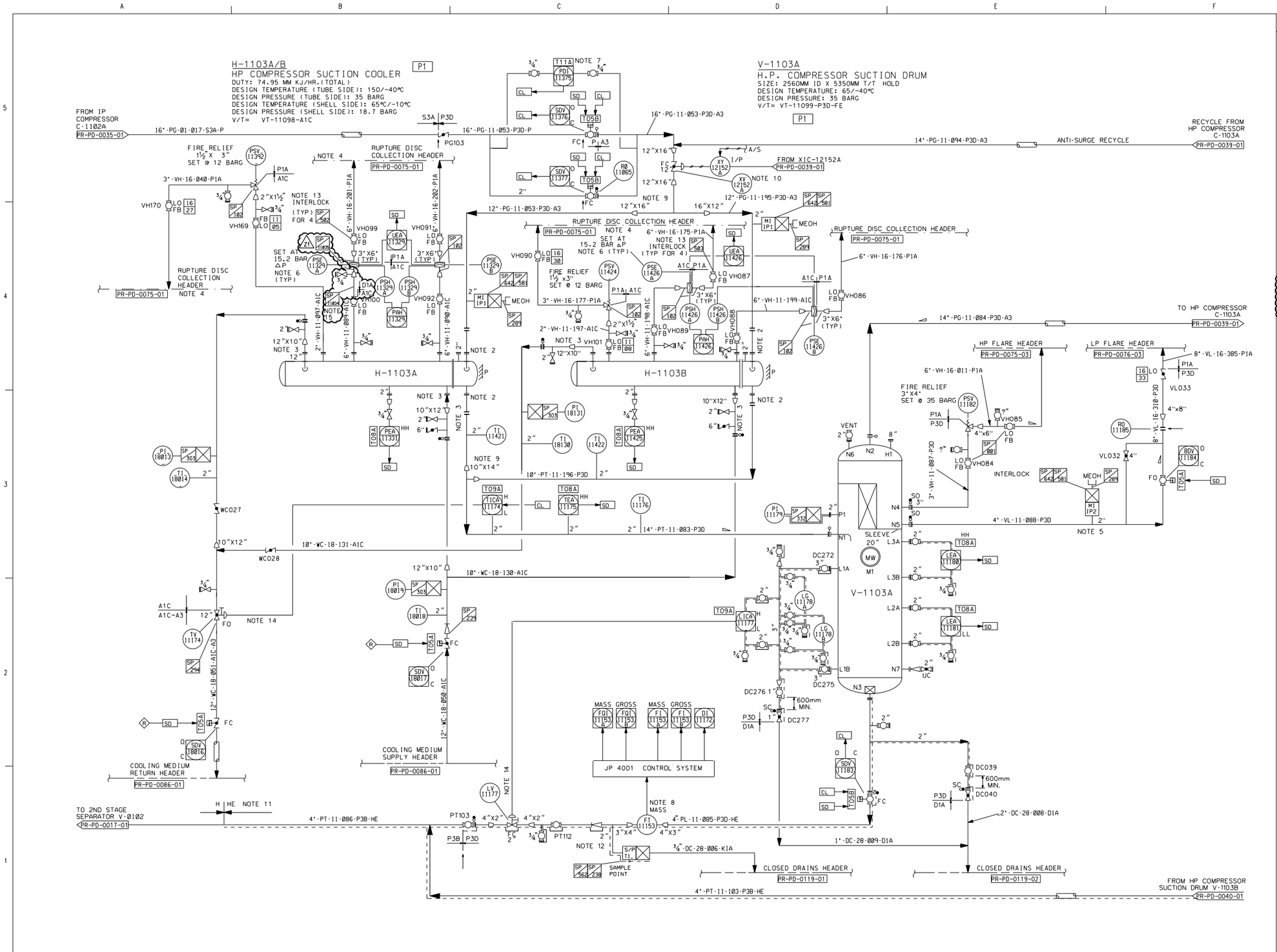


## NOTES

1. DELETED.
2. REMOVABLE SPOOL PIECES ARE REQUIRED FOR EXCHANGER BUNDLE REMOVAL.
3. REMOVABLE SPOOL PIECES REQUIRED FOR EXCHANGER MAINTENANCE.
4. RUPTURE DISC COLLECTION HEADER IS CONNECTED TO H.P. FLARE SYSTEM. RUPTURE DISC LINES TO BE DESIGNED FOR HIGH VELOCITY SLUG.
5. BLOWDOWN VALVE AND METHANOL INJECTION POINT TO BE LOCATED AT PIPING HIGH POINT.
6. DIFFERENTIAL PRESSURE IS BASED ON A MAXIMUM BACK PRESSURE OF 3.5 BARG.
7. PDI TO MONITOR PRESSURE DIFFERENTIAL IN EITHER DIRECTION.
8. FT-11153A/B SUPPLIED BY SELLER OF JP-4001. FLOW METER TO BE AT MINIMUM ELEVATION ON LEVEL 1 DECK.
9. PIPING TO AND FROM COOLERS TO BE SYMMETRICAL.
10. VALVE HAS MINIMUM STOP.
11. NO TRACING AFTER LIQUID POCKET.
12. SAMPLE CONNECTION TO BE LOCATED AT LOW POINT OF LINE FOR DRAINAGE.
13. 4-WAY INTERLOCK TO ENSURE A MINIMUM OF ONE RUPTURE DISC UNIT REMAINS IN SERVICE AT ALL TIMES.
14. MILLI-AMPERE INDICATOR INSTALLED ADJACENT TO VALVE.
15. PIPE SPOOL AND BALL VALVE IN PIPE CLASS D1A AND DESIGNATED SP-11034. Z1

ONLY ACTIVATED TRACE HEATING IS SHOWN ON P & ID, ALL OTHER INSTALLED TRACE HEATING IS NOT ACTIVATED AND NOT SHOWN ON P & ID.

FOR APPROVAL SIGNATURES SEE ARCHIVES DRAWING AT REV C

REFERENCE DRAWINGS

| DRG.No. | REV | TITLE |
|---|---|---|
| | | DCP 5000 AH 185 (ARN 1716) |
| | | DCP 5000 AH 297 ARN 2090 (EP-191) |
| | | DCP 5000 AH 412 ARN 2582 (EP-)-099) |
| | | DCP 5000 AH 729 ARN 3855 (EP-)-0128) |
| | | DCP 5000 AH 744 ARN 3923 (EP-239) |
| | | DCP 5000 AH 755 ARN 6336 (EP-238) |
| | | DCP 5000 AH 1054 |

| REV | REASON FOR ISSUE | DATE | DRN. | CKD. | BY ENG | ENG CKD. | L.E. APP'D | CNOOC APP'D |
|---|---|---|---|---|---|---|---|---|
| 4 | REVISED TO LATEST INFO. | 14.8.03 | KM | JS | | | JS | KTL |
| 3 | AS BUILT | | | | | | | |
| 2 | REVISED FOR CONSTRUCTION | 30.12.02 | | | | | BAR | KTL |
| 1 | REVISED FOR CONSTRUCTION | 14.10.01 | DB | RT | | | RT | KTL |
| 0 | APPROVED FOR CONSTRUCTION | 7.6.01 | - | GC | RT | JS | BAR | KTL |
| GD | APPROVED FOR FINAL DESIGN | 20.3.01 | JB | GC | RT | JS | BAR | KTL |

| REV | REASON FOR ISSUE | DATE | DRN. | CKD. | BY ENG | ENG CKD. | L.E. APP'D | CNOOC APP'D |
|---|---|---|---|---|---|---|---|---|
| FD | REVISED FOR DESIGN | 31.1.01 | DMB | GC | PDA | JS | BAR | KTL |
| ED | REVISED FOR DESIGN | 26.3.00 | GM | GC | PDA | JS | BAR | |
| Z1 | AS-BUILT AS PER WO 211133353 | 09.01.21 | TF | TF | GL | GL | TF | TR |
| 13 | UPDATED TO REFLECT SEQ-1080 | 12.12.03 | GPG | SH | DB | | MS | 19.12.03 |
| 12 | AS-BUILT TO INCLUDE DO-254 | 20.6.95 | WN | GWM | | | | |
| 11 | AS COMMISSIONED | 28.4.94 | OW | DM | | | KJ | |

THIS IS A C.A.D. PRODUCED DRAWING AND SHOULD NOT BE MANUALLY MODIFIED

Worley

TITLE
PIPING AND INSTRUMENT DIAGRAM
HP COMPRESSOR
SUCTION COOLER & DRUM - TRAIN A

DRAWING No.
SCOTT-FW-0000-PR-PD-0038-01

| PROJECT | ORIG | AREA/MOD | DISC | TYPE | SEQ. No. | SHT. | REV | SCALE |
|---|---|---|---|---|---|---|---|---|
| | | | | | | | Z1 | NTS |