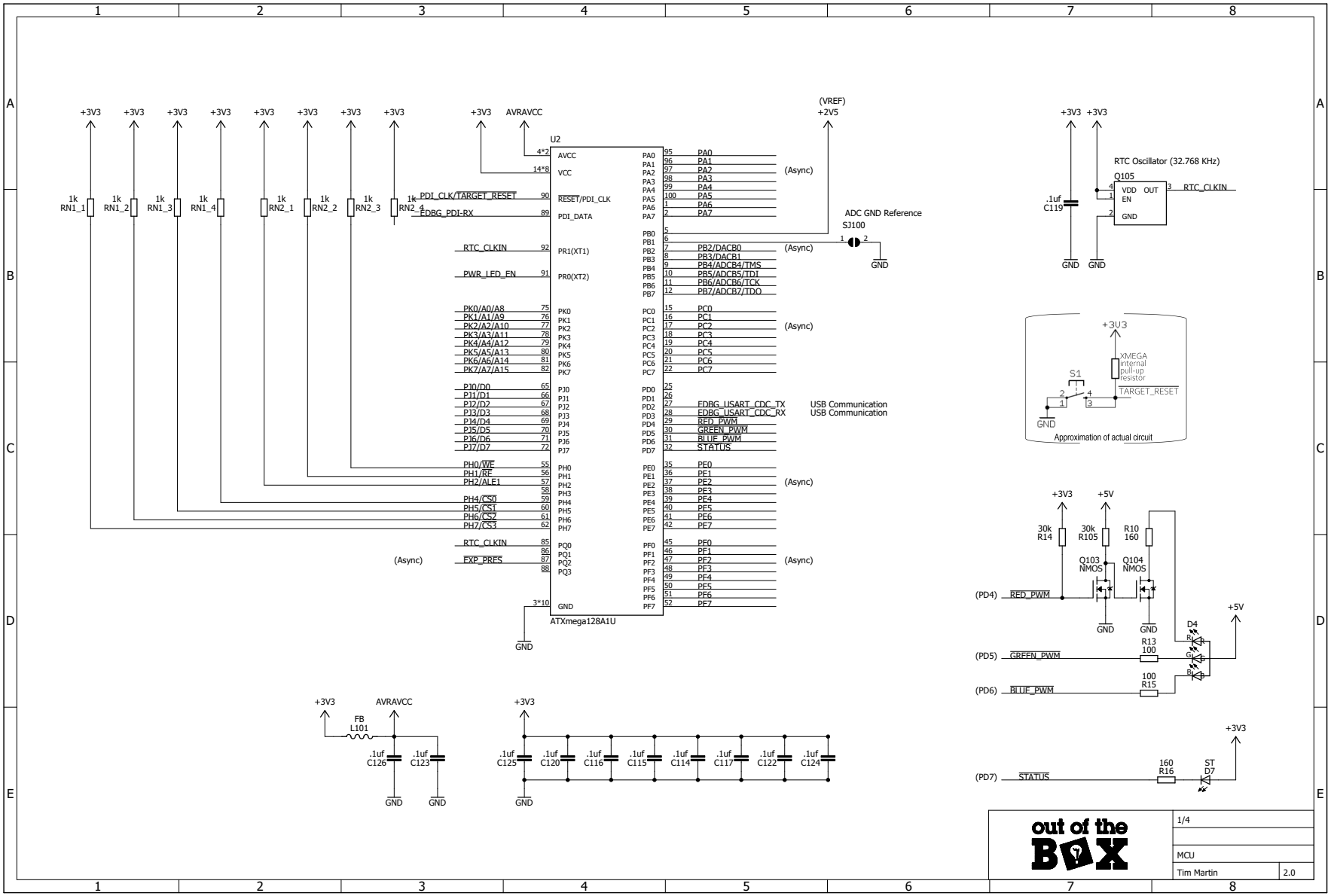

out of the BOX

1/4	
MCU	
Tim Martin	2.0

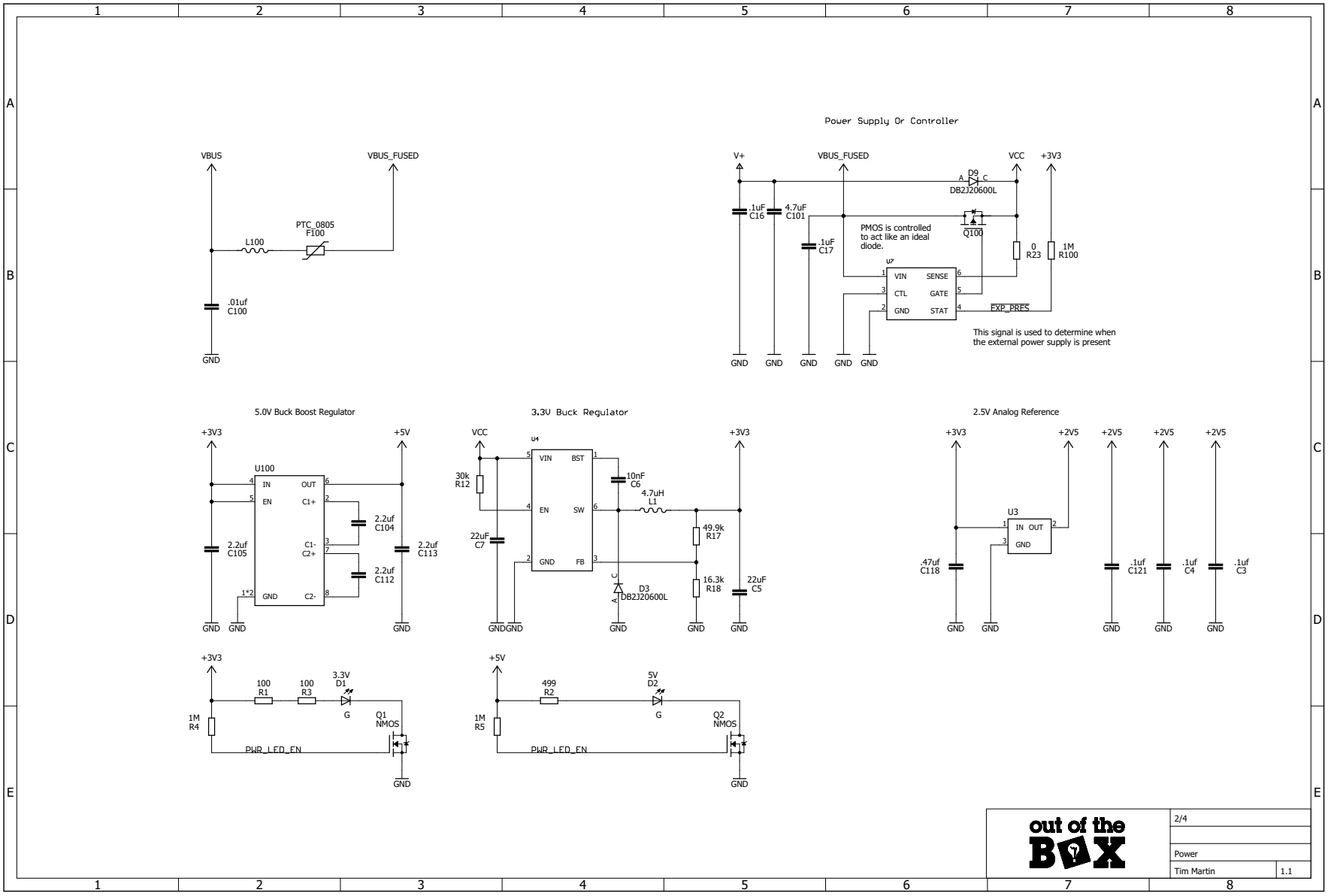
Power Supply Or Controller
VBUS
VBUS_FUSED
L100
PTC_0805
F100
.01uf
C100
GND
V+
VBUS_FUSED
VCC
+3V3
D9
DB2J20600L
.1uF
C16
4.7uF
C101
.1uF
C17
Q100
PMOS is controlled to act like an ideal diode.
0
R23
.1M
R100
U7
VIN
SENSE
CTL
GATE
GND
STAT
EXP_PRES
This signal is used to determine when the external power supply is present
5.0V Buck Boost Regulator
+3V3
+5V
U100
IN
OUT
EN
C1+
C1-
C2+
GND
C2-
2.2uf
C105
2.2uf
C104
2.2uf
C112
2.2uf
C113
3.3V Buck Regulator
VCC
+3V3
U4
VIN
BST
EN
SW
GND
FB
30k
R12
22uF
C7
10nF
C6
4.7uH
L1
49.9k
R17
16.3k
R18
22uF
C5
D3
DB2J20600L
2.5V Analog Reference
+3V3
+2V5
U3
IN
OUT
GND
.47uf
C118
.1uf
C121
.1uf
C4
.1uf
C3
+3V3
100
R1
100
R3
3.3V
D1
G
Q1
NMOS
1M
R4
PWR_LED_EN
+5V
499
R2
5V
D2
G
Q2
NMOS
1M
R5
PWR_LED_EN
out of the BOX
2/4
Power
Tim Martin
1.1

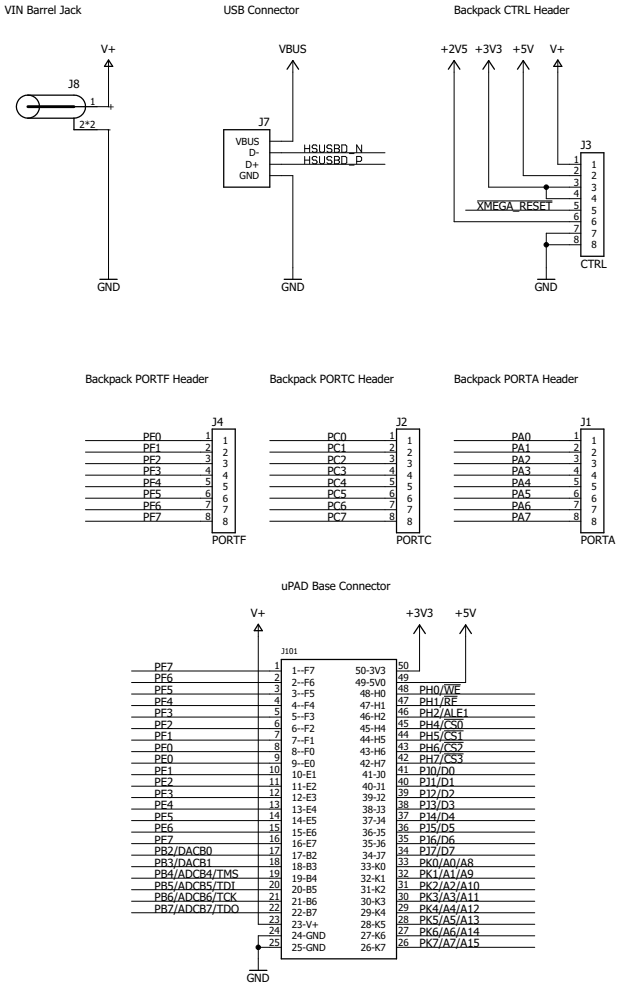

out of the BOX

3/4	
Connections	
Tim Martin	1.1