CONTROLLER

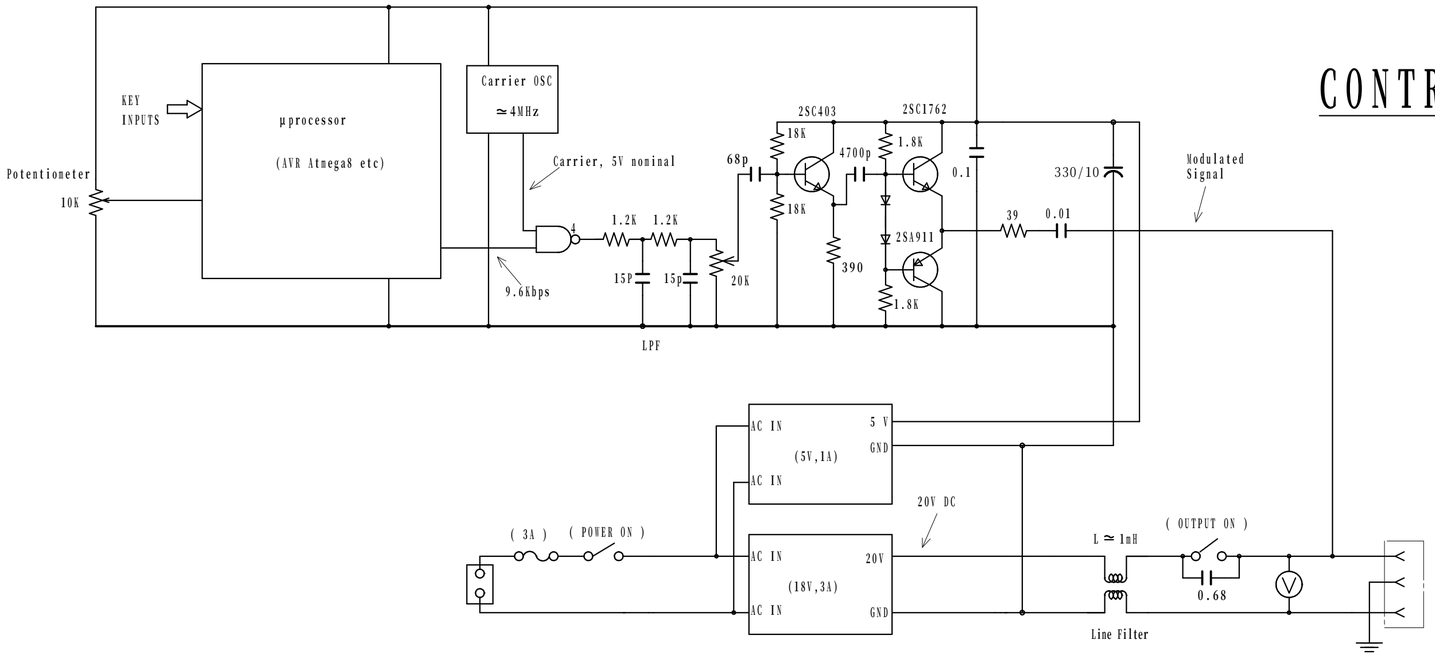

LOCOMOTIVE

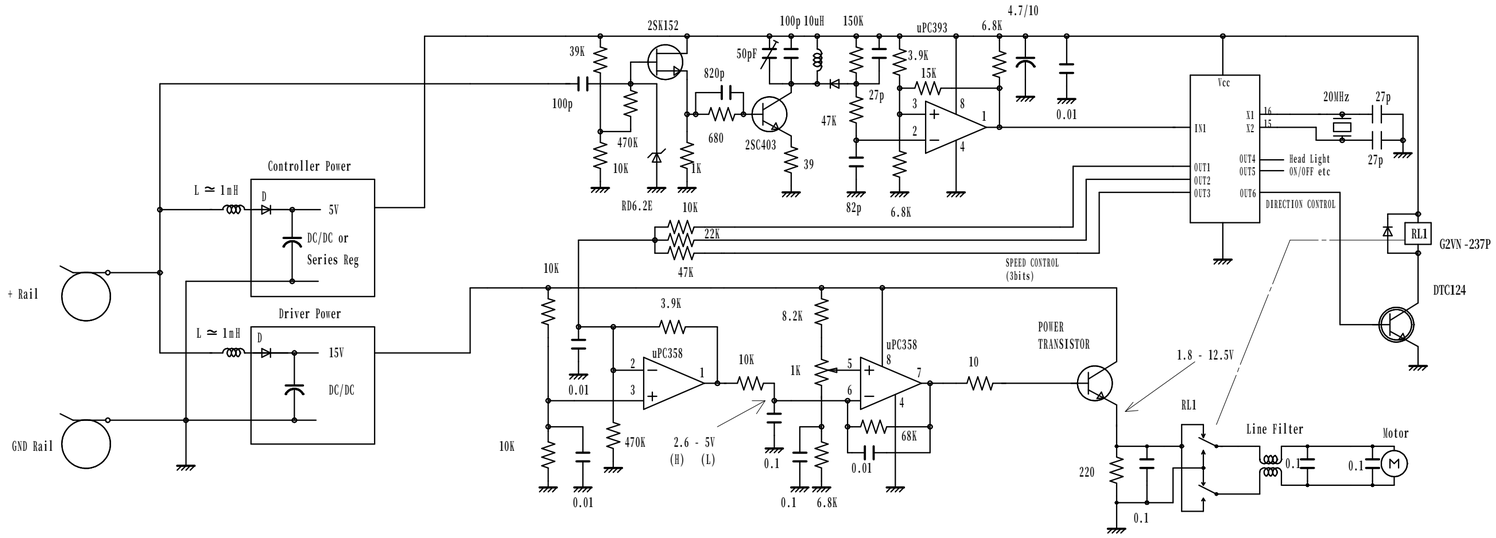

Feb 2021

Block Diagram	1
LOCOMOTIVE CONTROLLER	1