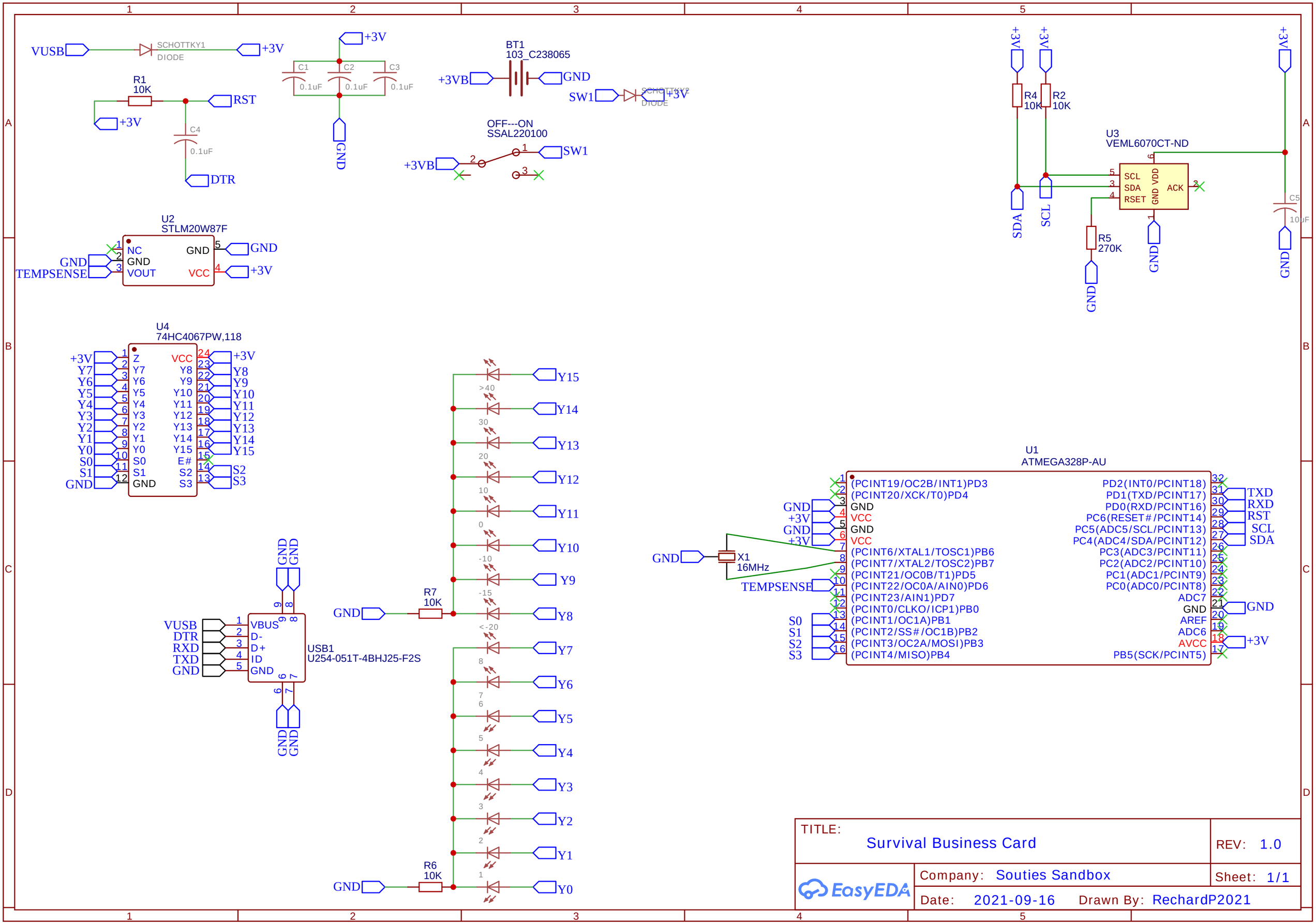
VUSB
SCHOTTKY1
DIODE
+3V
R1
10K
RST
C4
0.1uF
DTR
C1
C2
C3
0.1uF
GND
BT1
103_C238065
+3VB
SW1
OFF---ON
SSAL220100
U2
STLM20W87F
NC
GND
VOUT
VCC
TEMPSENSE
U4
74HC4067PW,118
Z
S0
S1
S2
S3
E#
U3
VEML6070CT-ND
SCL
SDA
RSET
ACK
R4
10K
R2
10K
R5
270K
C5
10uF
U1
ATMEGA328P-AU
(PCINT19/OC2B/INT1)PD3
(PCINT20/XCK/T0)PD4
(PCINT6/XTAL1/TOSC1)PB6
(PCINT7/XTAL2/TOSC2)PB7
(PCINT21/OC0B/T1)PD5
(PCINT22/OC0A/AIN0)PD6
(PCINT23/AIN1)PD7
(PCINT0/CLKO/ICP1)PB0
(PCINT1/OC1A)PB1
(PCINT2/SS#/OC1B)PB2
(PCINT3/OC2A/MOSI)PB3
(PCINT4/MISO)PB4
PD2(INT0/PCINT18)
PD1(TXD/PCINT17)
PD0(RXD/PCINT16)
PC6(RESET#/PCINT14)
PC5(ADC5/SCL/PCINT13)
PC4(ADC4/SDA/PCINT12)
PC3(ADC3/PCINT11)
PC2(ADC2/PCINT10)
PC1(ADC1/PCINT9)
PC0(ADC0/PCINT8)
ADC7
AREF
ADC6
AVCC
PB5(SCK/PCINT5)
X1
16MHz
USB1
U254-051T-4BHJ25-F2S
VBUS
D-
D+
ID
R7
10K
R6
10K
Y15
Y14
Y13
Y12
Y11
Y10
Y9
Y8
Y7
Y6
Y5
Y4
Y3
Y2
Y1
Y0
TITLE:
Survival Business Card
REV: 1.0
Company: Souties Sandbox
Sheet: 1/1
Date: 2021-09-16
Drawn By: RechardP2021
EasyEDA